American Power Design, Inc.

"The best high voltage design solution"

RoHS

A5 SERIES 5 WATT HIGH VOLTAGE DC/DC CONVERTERS

FEATURES

- Customer Selects Output Voltage
- Outputs to 200 Vdc
- Low Profile
- High Regulation
- Ultra Wide Input Ranges
  (9-36Vdc , 20-60Vdc , 36-72Vdc)
- 1000 Vdc Output Isolation
- Continuous Short Circuit Protection

The A5 Series low profile high voltage DC/DC converter offers a highly regulated high voltage isolated output in a six-sided metal case. Their small size, wide input, and excellent regulation make them ideally suited for applications that demand a high degree of performance. All models will tolerate a short circuit indefinitely.

ELECTRICAL SPECIFICATIONS

Voltage Accuracy	+/-1%
Line Regulation	+/- 0.1%
Load Regulation	+/- 0.2%
Output Ripple	< 0.3% P-P
Input Filter	Low ESR Capacitor
Efficiency	78% (typ.)
Short Circuit Protection	Continuous
Switching Frequency	130 kHz
Output Isolation	1000 Vdc
Input / Output Capacitance	< 80pF

GENERAL SPECIFICATIONS

Temp. Stability	+/-0.02%/°C
Temp. (Operating , Case)	-25 to +70°C
Temp. (Storage)	-40 to +125°C
EMI/RFI	Six Sided Shield *(Case is Connected to -IN)*
Derating	None
Cooling	Free-Air Convection

PHYSICAL SPECIFICATIONS

Dimensions	1 x 2 x 0.41 inches
Weight	1.2 Oz
Case Material	Nickel Plated Metal *(With Non-Conductive Base Plate)*

Tel (888) 894-4446 WWW.APOWERDESIGN.COM Fax (603) 898-6534

A5 SERIES 5 WATT HIGH VOLTAGE DC/DC CONVERTERS

REPRESENTATIVE MODEL LISTING							
OUTPUT SPECIFICATIONS		MODEL NUMBER / INPUT RANGE					
VOLTAGE	CURRENT	9-36VDC		20-60VDC		36-72VDC	
		Non-RoHs	RoHs	Non-RoHs	RoHs	Non-RoHs	RoHs
24 Vdc	208 mA	A5-24	A5-24/Y	A5-24/B	A5-24/B/Y	A5-24/C	A5-24/C/Y
48 Vdc	104 mA	A5-48	A5-48/Y	A5-48/B	A5-48/B/Y	A5-48/C	A5-48/C/Y
100Vdc	50 mA	A5-100	A5-100/Y	A5-100/B	A5-100/B/Y	A5-100/C	A5-100/C/Y
120 Vdc	41.6 mA	A5-120	A5-120/Y	A5-120/B	A5-120/B/Y	A5-120/C	A5-120/C/Y
140 Vdc	35.7 mA	A5-140	A5-140/Y	A5-140/B	A5-140/B/Y	A5-140/C	A5-140/C/Y
150 Vdc	33.3 mA	A5-150	A5-150/Y	A5-150/B	A5-150/B/Y	A5-150/C	A5-150/C/Y
160 Vdc	31.2 mA	A5-160	A5-160/Y	A5-160/B	A5-160/B/Y	A5-160/C	A5-160/C/Y
180 Vdc	27.7 mA	A5-180	A5-180/Y	A5-180/B	A5-180/B/Y	A5-180/C	A5-180/C/Y
200 Vdc	25 mA	A5-200	A5-200/Y	A5-200/B	A5-200/B/Y	A5-200/C	A5-200/C/Y

A5-100/B/Y

Product Family

Total Output Power

/Y RoHS Compliance

Alternate Input Range
/B 20Vdc - 60Vdc
/C 36Vdc - 72Vdc

Customer Selects Output Voltage

The A5 Series are designed such that the customer may order any output voltage from 24Vdc to 200Vdc at no additional charge.

A5 SERIES 5 WATT HIGH VOLTAGE DC/DC CONVERTERS

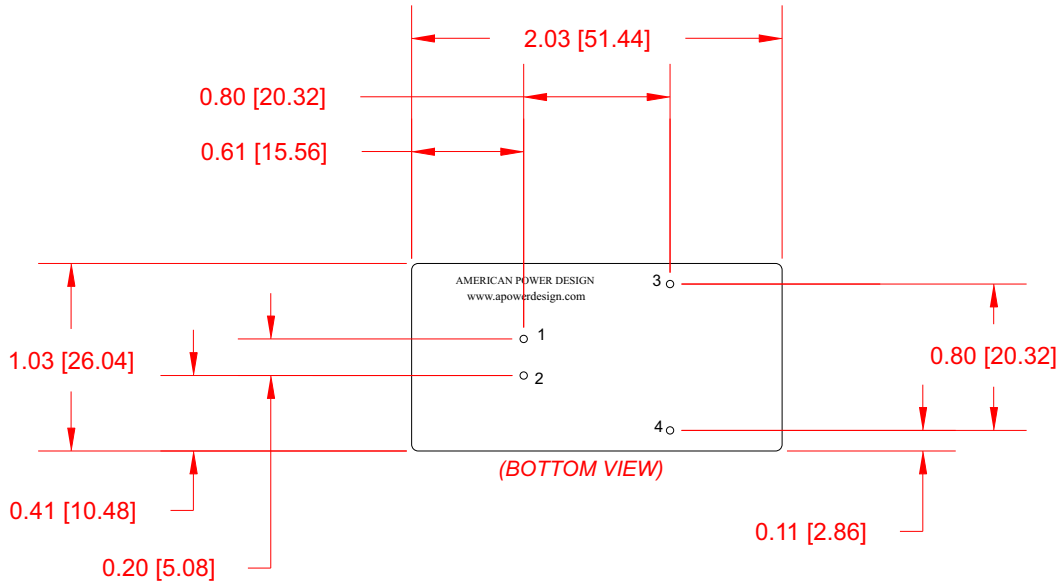

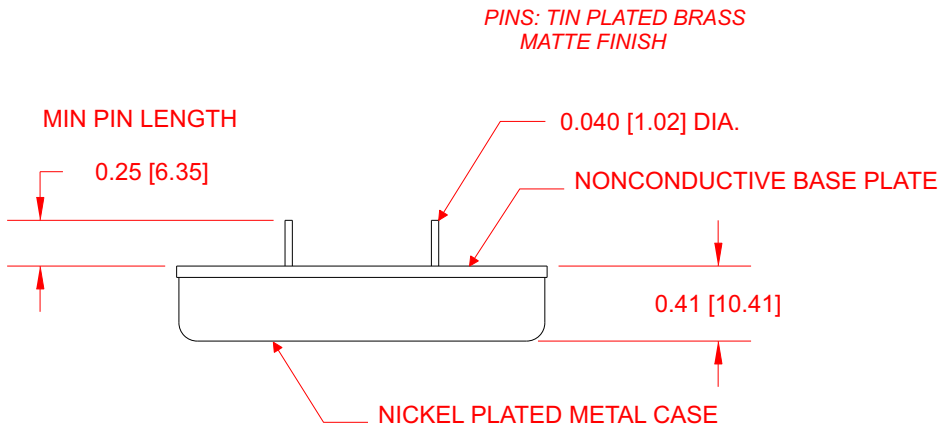

PIN #	FUNCTION
1	+ Input
2	- Input
3	+Output
4	- Output

Dimensions are in Inches
[Metric equivalents in brackets]

A5 SERIES 5 WATT HIGH VOLTAGE DC/DC CONVERTERS

APPLICATION NOTES

INPUT AND OUTPUT IMPEDANCE

The A5 Series of power converters have been designed to be stable with no external capacitors when used in low inductance input and output circuits. However, in some applications, the inductance associated with the distribution from the power source to the input of the converter can affect the stability of the converter. The addition of a 100 µF electrolytic capacitor with an ESR <1 Ohm across the input helps ensure stability of the converter. In many applications, the user has to use decoupling capacitance at the load.

SHORT CIRCUIT PROTECTION

The A5 Series is equipped with short circuit protection. The converter will fold-back the input power whenever a short circuit is applied to its output and automatically recover after the overload condition is removed.

ISOLATION

The output of the A5 Series is galvanically isolated from both the input and case, capacitance is < 80pF and resistance is > 10G Ohm. The converters case is connected directly to -In to aid in reducing unwanted noise.

RIPPLE AND NOISE

Figure below shows a typical output voltage ripple waveform, measured at full rated load current with no additional output filtering. External low ESR capacitors may be added across output to further reduce ripple.

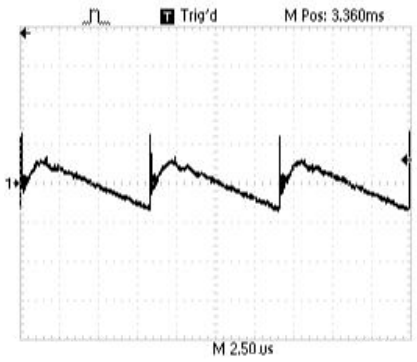

STARTUP TRANSIENT

Figure below shows a typical output voltage during turn-on, measured at no load current with no additional output filtering.

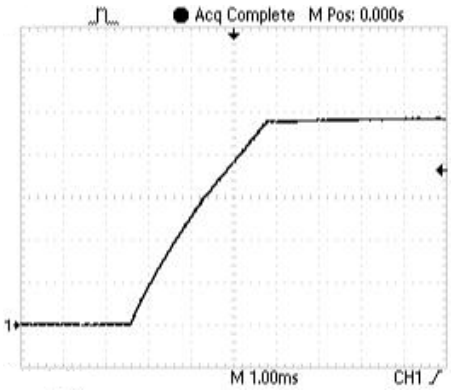

Figure below shows a typical output voltage during turn-on, measured at full rated load current with no additional output filtering.

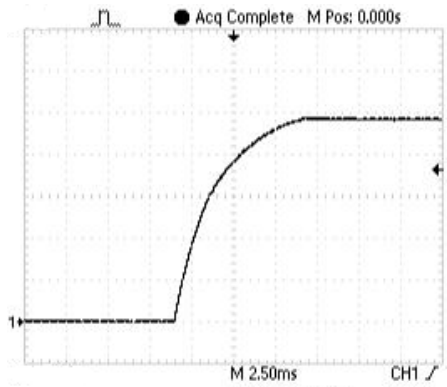

A5 SERIES 5 WATT HIGH VOLTAGE DC/DC CONVERTERS

APPLICATION NOTES

INRUSH CURRENT

The inrush current of the A5 Series has been kept as low as possible. However, a series resistor may be inserted in the input line to limit this current further.

LOAD TRANSIENT

Figure below shows a typical output voltage response, measured during a transition from full rated load current to no load current with no additional output filtering.

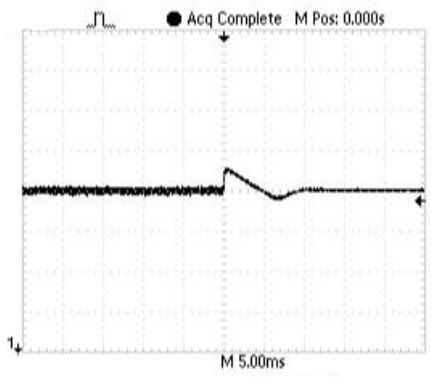

Figure below shows a typical output voltage response, measured during a transition from no load current to full rated load current with no additional output filtering.

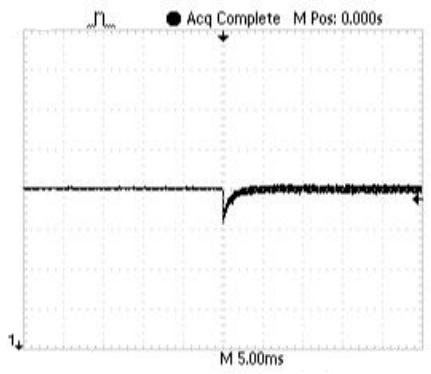

CONNECTION IN PARALLEL

The figure below show how to connect outputs of several units with equal nominal output voltage in parallel with the use of oring diodes.

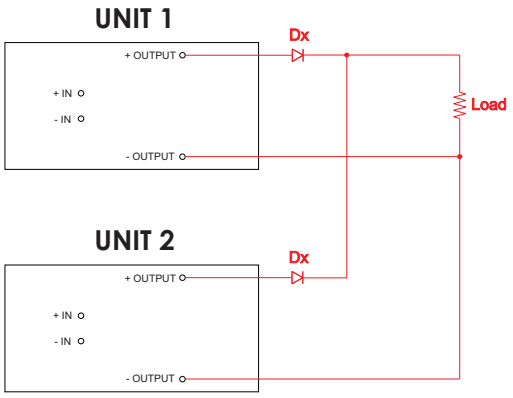

NOTE:
The ratings of Dx should be 1.5 times the maximum current and voltage expected in each branch.

CONNECTION IN SERIES

Figure below shows how to connect multiple outputs in series with the use of shunt diodes, taking into consideration that the highest achieved output voltage should remain below the rated isolation voltage.

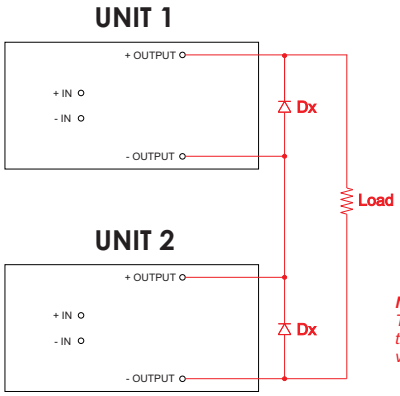

NOTE:
The ratings of Dx should be 1.5 times the maximum current and voltage expected in each branch.

A5 SERIES 5 WATT HIGH VOLTAGE DC/DC CONVERTERS

APPLICATION NOTES

CLEANING AGENTS

In order to avoid possible damage, any penetration of cleaning fluids must be prevented, since the power supplies are not hermetically sealed.

TECHNICAL REVISIONS

The appearance of products, including safety agency certifications pictured on labels, may change depending on the date manufactured. Specifications are subject to change without notice.

NUCLEAR AND MEDICAL APPLICATIONS

American Power Design products are not designed, intended for use in, or authorized for use as critical components in life support systems, equipment used in hazardous environments, or nuclear control systems without the express written consent of American Power Design, Inc.

SAFETY REQUIREMENTS

The converters are designed to meet North American and International safety regulatory requirements per UL 60950-1/CSA 22.2 No. 60950-1-07 Second Edition, IEC 60950-1: 2005, and EN 60950-1:2006. Basic Insulation is provided between input and output. To comply with safety agencies requirements, an input line fuse must be used external to the converter. The table below provides the recommended fuse rating for use with this family of products.

Input Voltage Range	Fuse Rating
9-36Vdc	1.5A
20-60Vdc	1A
36-72Vdc	0.5A

If one input fuse is used for a group of modules, the maximum fuse rating should not exceed 10A.

WARRANTY

All products manufactured by American Power Design, Inc. (APD) are warranted to be free of defects due to material or workmanship for a period of one year from date of shipment. At our option, APD will repair or replace any non-conforming product.
APD expressly disclaims any liability for consequential or incidental damages resulting from the use or misuse of its products by the purchaser or others.
This warranty is in lieu of all warranties expressed or implied, including the warranties of merchantability. No other warranties, obligations, or liabilities are expressed or implied.
All products being returned for repair require a return material authorization (RMA) assigned by APD prior to return shipment.

American Power Design, Inc.

"The best high voltage design solution"

RoHS

A15 SERIES 15 WATT HIGH VOLTAGE DC/DC CONVERTERS

FEATURES

- Customer Selects Output Voltage
- Outputs to 200 Vdc
- Low Profile
- High Regulation
- Ultra Wide Input Ranges
  (9-36Vdc , 20-60Vdc , 36-72Vdc)
- 1000 Vdc Output Isolation
- Continuous Short Circuit Protection

The A15 Series low profile high voltage DC/DC converter offers a highly regulated high voltage isolated output in a six-sided metal case. Their small size, wide input, and excellent regulation make them ideally suited for applications that demand a high degree of performance. All models will tolerate a short circuit indefinitely.

ELECTRICAL SPECIFICATIONS

Voltage Accuracy	+/-1%
Line Regulation	+/- 0.1%
Load Regulation	+/- 0.2%
Output Ripple	< 0.4% P-P
Input Filter	Low ESR Capacitor
Efficiency	87% (typ.)
Short Circuit Protection	Continuous
Switching Frequency	130 kHz
Output Isolation	1000 Vdc
Input / Output Capacitance	< 80pF

GENERAL SPECIFICATIONS

Temp. Stability	+/-0.02%/°C
Temp. (Operating , Case)	-25 to +70°C
Temp. (Storage)	-40 to +125°C
EMI/RFI	Six Sided Shield *(Case is Connected to -IN)*
Derating	None
Cooling	Free-Air Convection

PHYSICAL SPECIFICATIONS

Dimensions	1 x 2 x 0.41 inches
Weight	1.2 Oz
Case Material	Nickel Plated Metal *(With Non-Conductive Base Plate)*

Tel (888) 894-4446 WWW.APOWERDESIGN.COM Fax (603) 898-6534

A15 SERIES 15 WATT HIGH VOLTAGE DC/DC CONVERTERS

REPRESENTATIVE MODEL LISTING							
OUTPUT SPECIFICATIONS		MODEL NUMBER / INPUT RANGE					
VOLTAGE	CURRENT	9-36VDC		20-60VDC		36-72VDC	
		Non-RoHs	RoHs	Non-RoHs	RoHs	Non-RoHs	RoHs
24 Vdc	625 mA	A15-24	A15-24/Y	A15-24/B	A15-24/B/Y	A15-24/C	A15-24/C/Y
48 Vdc	312 mA	A15-48	A15-48/Y	A15-48/B	A15-48/B/Y	A15-48/C	A15-48/C/Y
100Vdc	150 mA	A15-100	A15-100/Y	A15-100/B	A15-100/B/Y	A15-100/C	A15-100/C/Y
120 Vdc	125 mA	A15-120	A15-120/Y	A15-120/B	A15-120/B/Y	A15-120/C	A15-120/C/Y
140 Vdc	107 mA	A15-140	A15-140/Y	A15-140/B	A15-140/B/Y	A15-140/C	A15-140/C/Y
150 Vdc	100 mA	A15-150	A15-150/Y	A15-150/B	A15-150/B/Y	A15-150/C	A15-150/C/Y
160 Vdc	93.7 mA	A15-160	A15-160/Y	A15-160/B	A15-160/B/Y	A15-160/C	A15-160/C/Y
180 Vdc	83.3 mA	A15-180	A15-180/Y	A15-180/B	A15-180/B/Y	A15-180/C	A15-180/C/Y
200 Vdc	75 mA	A15-200	A15-200/Y	A15-200/B	A15-200/B/Y	A15-200/C	A15-200/C/Y

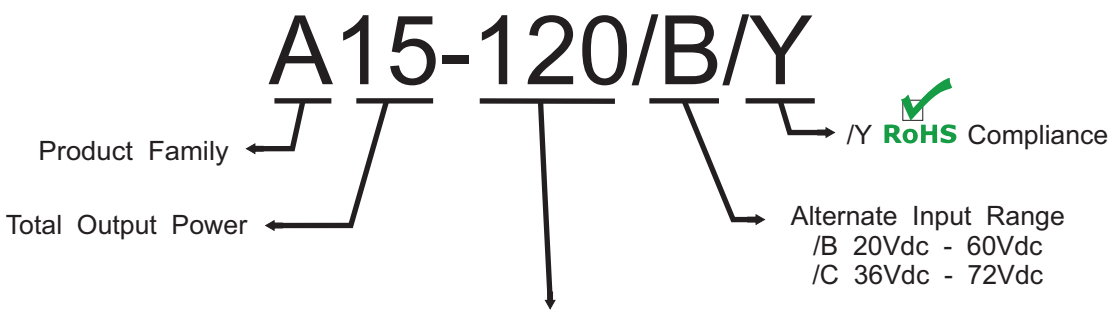

Customer Selects Output Voltage

The A15 Series are designed such that the customer may order any output voltage from 24Vdc to 200Vdc at no additional charge.

A15 SERIES 15 WATT HIGH VOLTAGE DC/DC CONVERTERS

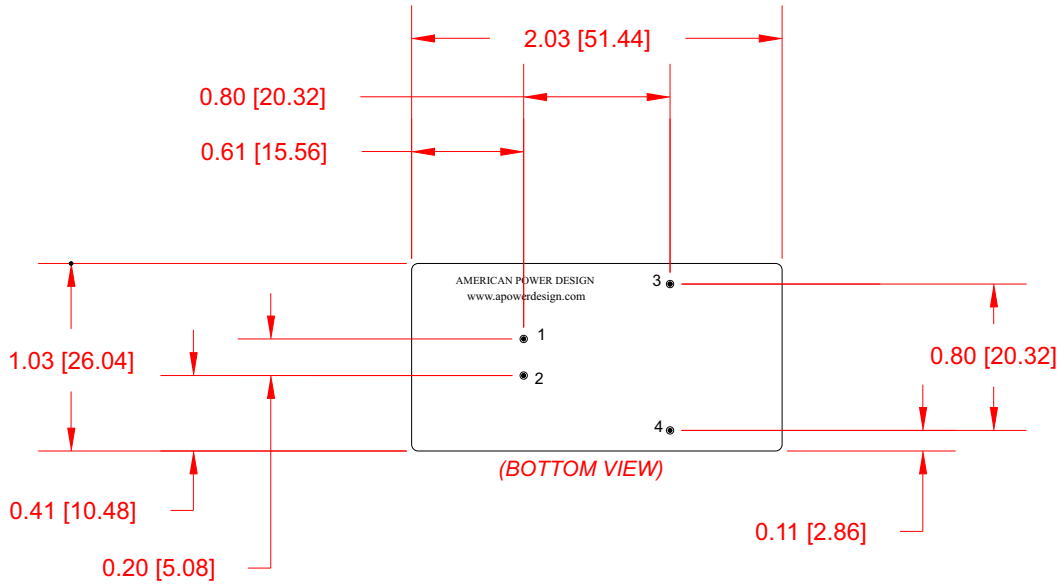

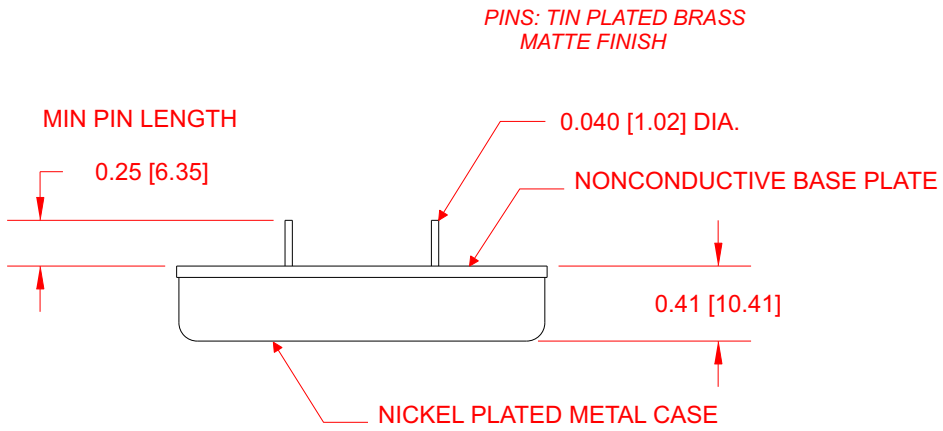

PIN #	FUNCTION
1	+ Input
2	- Input
3	+Output
4	- Output

Dimensions are in Inches
[Metric equivalents in brackets]

A15 SERIES 15 WATT HIGH VOLTAGE DC/DC CONVERTERS

APPLICATION NOTES

INPUT AND OUTPUT IMPEDANCE

The A15 Series of power converters have been designed to be stable with no external capacitors when used in low inductance input and output circuits. However, in some applications, the inductance associated with the distribution from the power source to the input of the converter can affect the stability of the converter. The addition of a 100 µF electrolytic capacitor with an ESR <1 Ohm across the input helps ensure stability of the converter. In many applications, the user has to use decoupling capacitance at the load.

SHORT CIRCUIT PROTECTION

The A15 Series is equipped with short circuit protection. The converter will fold-back the input power whenever a short circuit is applied to its output and automatically recover after the overload condition is removed.

ISOLATION

The output of the A15 Series is galvanically isolated from both the input and case, capacitance is < 80pF and resistance is > 10G Ohm. The converters case is connected directly to -In to aid in reducing unwanted noise.

RIPPLE AND NOISE

Figure below shows a typical output voltage ripple waveform, measured at full rated load current with no additional output filtering. External low ESR capacitors may be added across output to further reduce ripple.

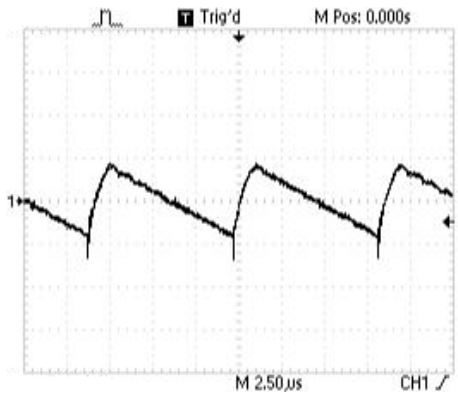

STARTUP TRANSIENT

Figure below shows a typical output voltage during turn-on, measured at no load current with no additional output filtering.

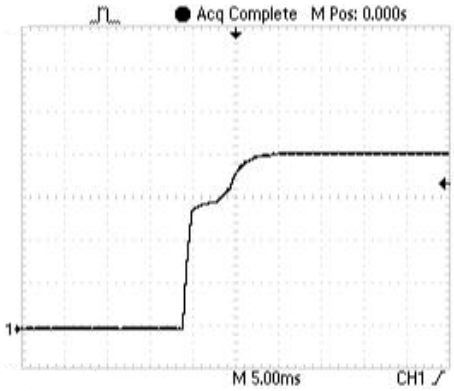

Figure below shows a typical output voltage during turn-on, measured at full rated load current with no additional output filtering.

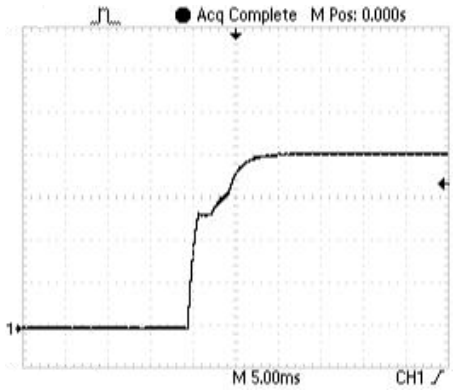

A15 SERIES 15 WATT HIGH VOLTAGE DC/DC CONVERTERS

APPLICATION NOTES

INRUSH CURRENT

The inrush current of the A15 Series has been kept as low as possible. However, a series resistor may be inserted in the input line to limit this current further.

LOAD TRANSIENT

Figure below shows a typical output voltage response, measured during a transition from full rated load current to no load current with no additional output filtering.

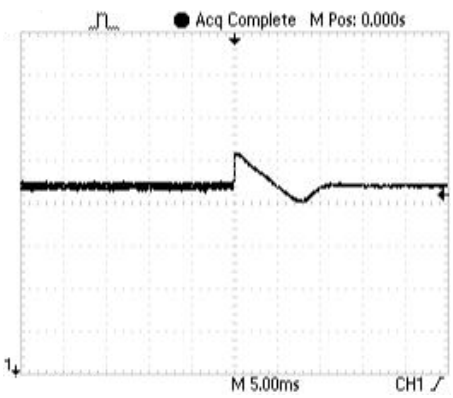

Figure below shows a typical output voltage response, measured during a transition from no load current to full rated load current with no additional output filtering.

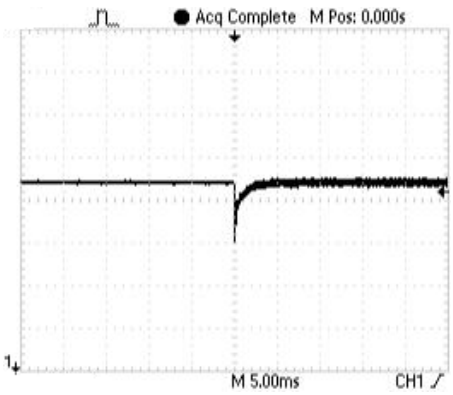

CONNECTION IN PARALLEL

The figure below show how to connect outputs of several units with equal nominal output voltage in parallel with the use of oring diodes.

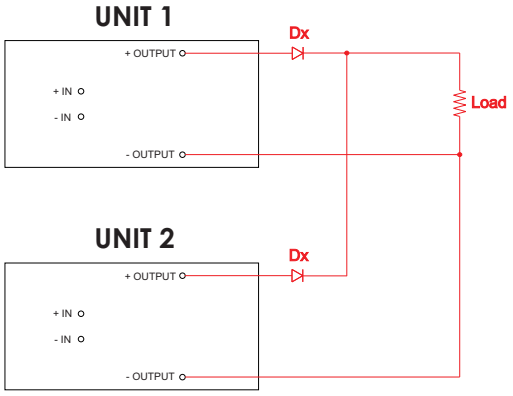

NOTE:
The ratings of Dx should be 1.5 times the maximum current and voltage expected in each branch.

CONNECTION IN SERIES

Figure below shows how to connect multiple outputs in series with the use of shunt diodes, taking into consideration that the highest achieved output voltage should remain below the rated isolation voltage.

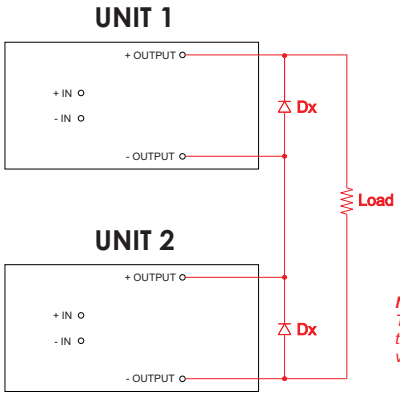

NOTE:
The ratings of Dx should be 1.5 times the maximum current and voltage expected in each branch.

A15 SERIES 15 WATT HIGH VOLTAGE DC/DC CONVERTERS

APPLICATION NOTES

CLEANING AGENTS

In order to avoid possible damage, any penetration of cleaning fluids must be prevented, since the power supplies are not hermetically sealed.

NUCLEAR AND MEDICAL APPLICATIONS

American Power Design products are not designed, intended for use in, or authorized for use as critical components in life support systems, equipment used in hazardous environments, or nuclear control systems without the express written consent of American Power Design, Inc.

TECHNICAL REVISIONS

The appearance of products, including safety agency certifications pictured on labels, may change depending on the date manufactured. Specifications are subject to change without notice.

SAFETY REQUIREMENTS

The converters are designed to meet North American and International safety regulatory requirements per UL 60950-1/CSA 22.2 No. 60950-1-07 Second Edition, IEC 60950-1: 2005, and EN 60950-1:2006. Basic Insulation is provided between input and output. To comply with safety agencies requirements, an input line fuse must be used external to the converter. The table below provides the recommended fuse rating for use with this family of products.

Input Voltage Range	Fuse Rating
9-36Vdc	3A
20-60Vdc	1.5A
36-72Vdc	1A

If one input fuse is used for a group of modules, the maximum fuse rating should not exceed 10A.

WARRANTY

All products manufactured by American Power Design, Inc. (APD) are warranted to be free of defects due to material or workmanship for a period of one year from date of shipment. At our option, APD will repair or replace any non-conforming product.
APD expressly disclaims any liability for consequential or incidental damages resulting from the use or misuse of its products by the purchaser or others.
This warranty is in lieu of all warranties expressed or implied, including the warranties of merchantability. No other warranties, obligations, or liabilities are expressed or implied.
All products being returned for repair require a return material authorization(RMA) assigned by APD prior to return shipment.

American Power Design, Inc.

"The best high voltage design solution"

RoHS

A50 SERIES 50 WATT HIGH VOLTAGE DC/DC CONVERTERS

FEATURES

- Customer Selects Output Voltage
- Outputs to 200 Vdc
- Low Profile
- High Regulation
- Ultra Wide Input Ranges
  (10-20Vdc , 18-36Vdc , 36-72Vdc)
- 1000 Vdc Output Isolation
- Continuous Short Circuit Protection

The A50 Series low profile high voltage DC/DC converter offers a highly regulated high voltage isolated output in a six-sided metal case. Their small size, wide input, and excellent regulation make them ideally suited for applications that demand a high degree of performance. All models will tolerate a short circuit indefinitely.

ELECTRICAL SPECIFICATIONS

Voltage Accuracy	+/-1%
Line Regulation	+/- 0.3%
Load Regulation	+/- 0.5%
Output Ripple	< 0.5% P-P
Input Filter	Low ESR Capacitor
Efficiency	89% (typ.)
Short Circuit Protection	Continuous
Switching Frequency	130 kHz
Output Isolation	1000 Vdc
Input / Output Capacitance	< 200pF

GENERAL SPECIFICATIONS

Temp. Stability	+/-0.02%/°C
Temp. (Operating , Case)	-25 to +70°C
Temp. (Storage)	-40 to +125°C
EMI/RFI	Six Sided Shield *(Case is Connected to -IN)*
Derating	None
Cooling	Free-Air Convection

PHYSICAL SPECIFICATIONS

Dimensions	2 x 2 x 0.51 inches
Weight	2.8 Oz
Case Material	Nickel Plated Metal *(With Non-Conductive Base Plate)*

A50 SERIES 50 WATT HIGH VOLTAGE DC/DC CONVERTERS

REPRESENTATIVE MODEL LISTING							
OUTPUT SPECIFICATIONS		MODEL NUMBER / INPUT RANGE					
VOLTAGE	CURRENT	10-20VDC		18-36VDC		36-72VDC	
		Non-RoHs	RoHs	Non-RoHs	RoHs	Non-RoHs	RoHs
48 Vdc	1 A	A50-48	A50-48/Y	A50-48/A	A50-48/A/Y	A50-48/C	A50-48/C/Y
75 Vdc	666 mA	A50-75	A50-75/Y	A50-75/A	A50-75/A/Y	A50-75/C	A50-75/C/Y
100Vdc	500 mA	A50-100	A50-100/Y	A50-100/A	A50-100/A/Y	A50-100/C	A50-100/C/Y
120 Vdc	416 mA	A50-120	A50-120/Y	A50-120/A	A50-120/A/Y	A50-120/C	A50-120/C/Y
140 Vdc	357 mA	A50-140	A50-140/Y	A50-140/A	A50-140/A/Y	A50-140/C	A50-140/C/Y
150 Vdc	333 mA	A50-150	A50-150/Y	A50-150/A	A50-150/A/Y	A50-150/C	A50-150/C/Y
160 Vdc	312 mA	A50-160	A50-160/Y	A50-160/A	A50-160/A/Y	A50-160/C	A50-160/C/Y
180 Vdc	277 mA	A50-180	A50-180/Y	A50-180/A	A50-180/A/Y	A50-180/C	A50-180/C/Y
200 Vdc	250 mA	A50-200	A50-200/Y	A50-200/A	A50-200/A/Y	A50-200/C	A50-200/C/Y

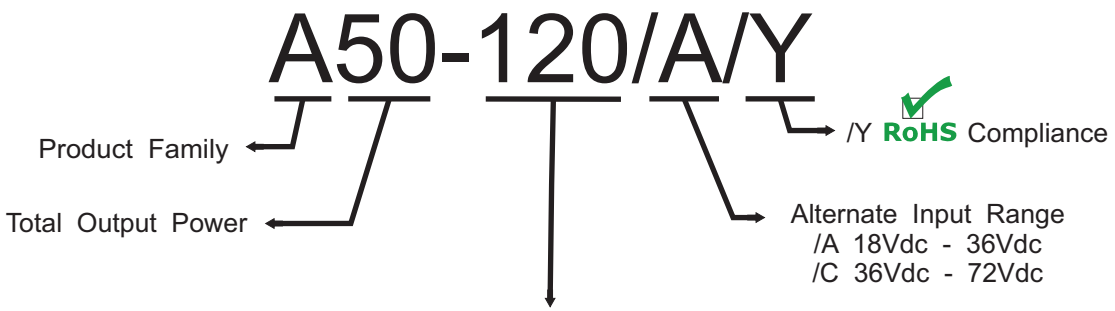

Customer Selects Output Voltage

The A50 Series are designed such that the customer may order any output voltage from 48Vdc to 200Vdc at no additional charge.

A50 SERIES 50 WATT HIGH VOLTAGE DC/DC CONVERTERS

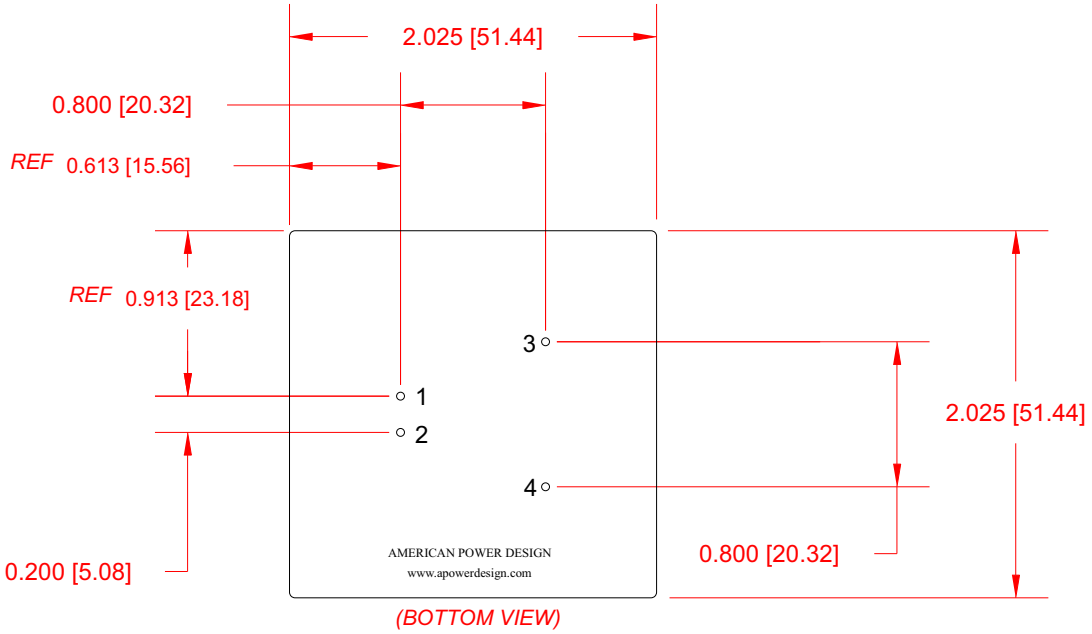

PINS: TIN PLATED BRASS
MATTE FINISH

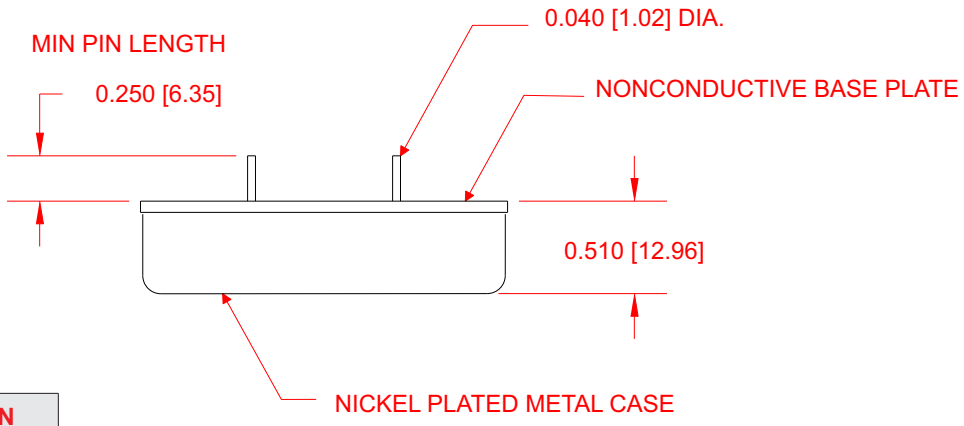

PIN #	FUNCTION
1	+ Input
2	- Input
3	+Output
4	- Output

Dimensions are in Inches
[Metric equivalents in brackets]

A50 SERIES 50 WATT HIGH VOLTAGE DC/DC CONVERTERS

APPLICATION NOTES

INPUT AND OUTPUT IMPEDANCE

The A50 Series of power converters have been designed to be stable with no external capacitors when used in low inductance input and output circuits. However, in some applications, the inductance associated with the distribution from the power source to the input of the converter can affect the stability of the converter. The addition of a 100 µF electrolytic capacitor with an ESR <1 Ohm across the input helps ensure stability of the converter. In many applications, the user has to use decoupling capacitance at the load.

SHORT CIRCUIT PROTECTION

The A50 Series is equipped with short circuit protection. The converter will fold-back the input power whenever a short circuit is applied to its output and automatically recover after the overload condition is removed.

ISOLATION

The output of the A50 Series is galvanically isolated from both the input and case, capacitance is < 200pF and resistance is > 10G Ohm. The converters case is connected directly to -In to aid in reducing unwanted noise.

RIPPLE AND NOISE

Figure below shows a typical output voltage ripple waveform, measured at full rated load current with no additional output filtering. External low ESR capacitors may be added across output to further reduce ripple.

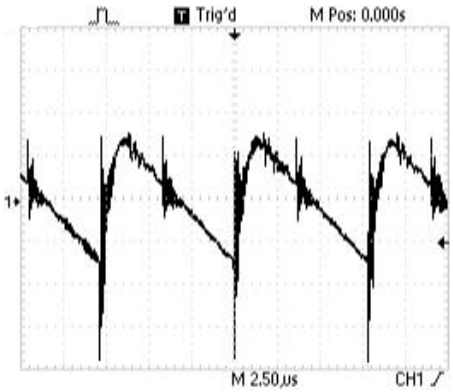

STARTUP TRANSIENT

Figure below shows a typical output voltage during turn-on, measured at no load current with no additional output filtering.

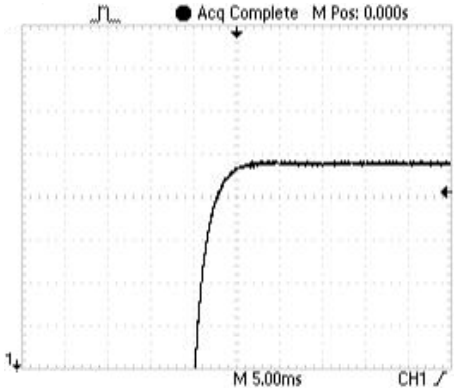

Figure below shows a typical output voltage during turn-on, measured at full rated load current with no additional output filtering.

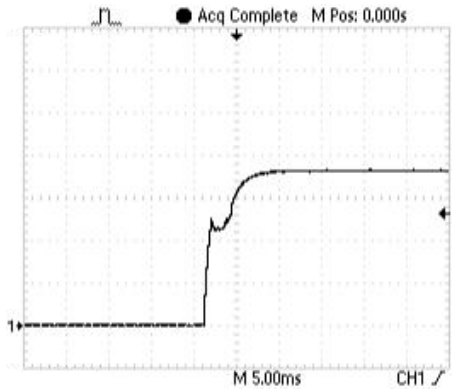

A50 SERIES 50 WATT HIGH VOLTAGE DC/DC CONVERTERS

APPLICATION NOTES

INRUSH CURRENT

The inrush current of the A50 Series has been kept as low as possible. However, a series resistor may be inserted in the input line to limit this current further.

LOAD TRANSIENT

Figure below shows a typical output voltage response, measured during a transition from full rated load current to no load current with no additional output filtering.

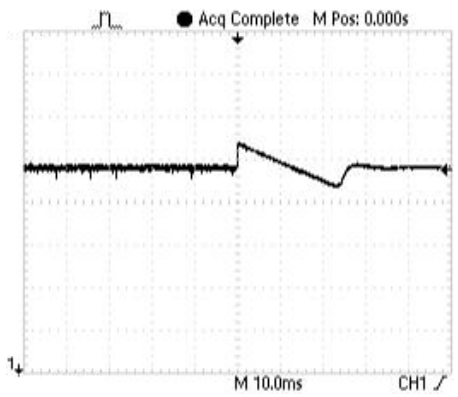

Figure below shows a typical output voltage response, measured during a transition from no load current to full rated load current with no additional output filtering.

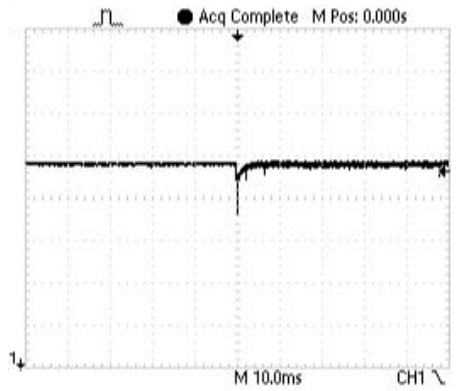

CONNECTION IN PARALLEL

The figure below show how to connect outputs of several units with equal nominal output voltage in parallel with the use of oring diodes.

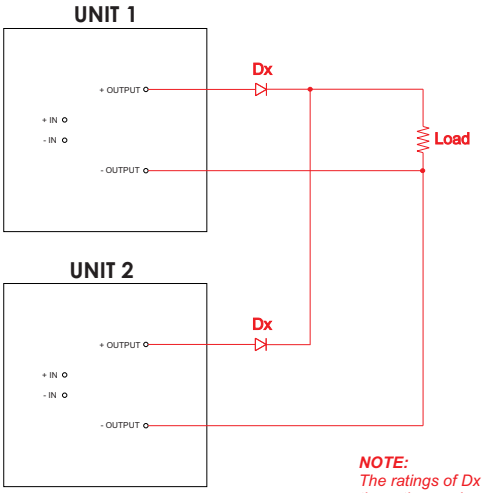

NOTE:
The ratings of Dx should be 1.5 times the maximum current and voltage expected in each branch.

CONNECTION IN SERIES

Figure below shows how to connect multiple outputs in series with the use of shunt diodes, taking into consideration that the highest achieved output voltage should remain below the rated isolation voltage.

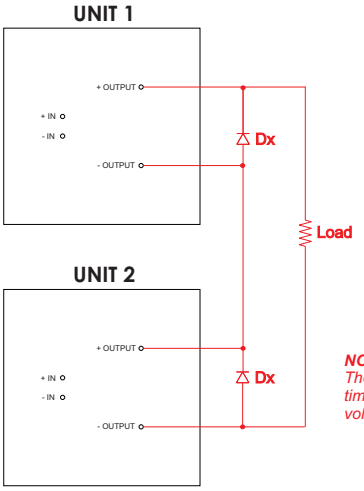

NOTE:
The ratings of Dx should be 1.5 times the maximum current and voltage expected in each branch.

A50 SERIES 50 WATT HIGH VOLTAGE DC/DC CONVERTERS

APPLICATION NOTES

CLEANING AGENTS

In order to avoid possible damage, any penetration of cleaning fluids must be prevented, since the power supplies are not hermetically sealed.

NUCLEAR AND MEDICAL APPLICATIONS

American Power Design products are not designed, intended for use in, or authorized for use as critical components in life support systems, equipment used in hazardous environments, or nuclear control systems without the express written consent of American Power Design, Inc.

TECHNICAL REVISIONS

The appearance of products, including safety agency certifications pictured on labels, may change depending on the date manufactured. Specifications are subject to change without notice.

SAFETY REQUIREMENTS

The converters are designed to meet North American and International safety regulatory requirements per UL 60950-1/CSA 22.2 No. 60950-1-07 Second Edition, IEC 60950-1: 2005, and EN 60950-1:2006. Basic Insulation is provided between input and output. To comply with safety agencies requirements, an input line fuse must be used external to the converter. The table below provides the recommended fuse rating for use with this family of products.

Input Voltage Range	Fuse Rating
10-20Vdc	10A
18-36Vdc	5A
36-72Vdc	2.5A

If one input fuse is used for a group of modules, the maximum fuse rating should not exceed 20A.

WARRANTY

All products manufactured by American Power Design, Inc. (APD) are warranted to be free of defects due to material or workmanship for a period of one year from date of shipment. At our option, APD will repair or replace any non-conforming product.
APD expressly disclaims any liability for consequential or incidental damages resulting from the use or misuse of its products by the purchaser or others.
This warranty is in lieu of all warranties expressed or implied, including the warranties of merchantability. No other warranties, obligations, or liabilities are expressed or implied.
All products being returned for repair require a return material authorization(RMA) assigned by APD prior to return shipment.

American Power Design, Inc.

"The best high voltage design solution"

RoHS

A100 SERIES 100 WATT HIGH VOLTAGE DC/DC CONVERTERS

FEATURES

- Customer Selects Output Voltage
- Outputs to 200 Vdc
- Efficiency to 90%
- High Regulation
- Ultra Wide Input Ranges
  (10-20Vdc , 18-36Vdc , 36-72Vdc)
- Remote On/Off Control
- Continuous Short Circuit Protection

The A100 Series high voltage DC/DC converter offers a highly regulated high voltage isolated output in a six-sided metal case. Their high power density, wide input, and excellent regulation make them ideally suited for applications that demand a high degree of performance. All models will tolerate a short circuit indefinitely. Also included is a Pi input filter and remote on/off.

ELECTRICAL SPECIFICATIONS

Voltage Accuracy	+/-1%
Line Regulation	+/- 0.2%
Load Regulation	+/- 0.3%
Output Ripple	< 0.3% P-P
Input Filter	Pi Network
Efficiency	90% (typ.)
Short Circuit Protection	Continuous
Switching Frequency	130 kHz
Output Isolation	1000 Vdc
Input / Output Capacitance	< 100pF

GENERAL SPECIFICATIONS

Temp. Stability	+/-0.02%/°C
Temp. (Operating , Case)	-25 to +70°C
Temp. (Storage)	-40 to +125°C
EMI/RFI	Six Sided Shield *(Case is Connected to -IN)*
Derating	None
Cooling	Free-Air Convection
Thermal Shut Down	100°C +/- 5°C *(Self-Resetting)*

PHYSICAL SPECIFICATIONS

Dimensions	2.75 x 4.8 x 0.92 inches
Weight	13.5 Oz
Case Material	Black Coated Metal *(With Non-Conductive Base Plate)*

A100 SERIES 100 WATT HIGH VOLTAGE DC/DC CONVERTERS

REPRESENTATIVE MODEL LISTING							
OUTPUT SPECIFICATIONS		MODEL NUMBER / INPUT RANGE					
VOLTAGE	CURRENT	10-20VDC		18-36VDC		36-72VDC	
		Non-RoHs	RoHs	Non-RoHs	RoHs	Non-RoHs	RoHs
48 Vdc	2.1 A	A100-48	A100-48/Y	A100-48/A	A100-48/A/Y	A100-48/C	A100-48/C/Y
75 Vdc	1.3 A	A100-75	A100-75/Y	A100-75/A	A100-75/A/Y	A100-75/C	A100-75/C/Y
100Vdc	1.0 A	A100-100	A100-100/Y	A100-100/A	A100-100/A/Y	A100-100/C	A100-100/C/Y
120 Vdc	833 mA	A100-120	A100-120/Y	A100-120/A	A100-120/A/Y	A100-120/C	A100-120/C/Y
140 Vdc	714 mA	A100-140	A100-140/Y	A100-140/A	A100-140/A/Y	A100-140/C	A100-140/C/Y
150 Vdc	666 mA	A100-150	A100-150/Y	A100-150/A	A100-150/A/Y	A100-150/C	A100-150/C/Y
160 Vdc	625 mA	A100-160	A100-160/Y	A100-160/A	A100-160/A/Y	A100-160/C	A100-160/C/Y
180 Vdc	555 mA	A100-180	A100-180/Y	A100-180/A	A100-180/A/Y	A100-180/C	A100-180/C/Y
200 Vdc	500 mA	A100-200	A100-200/Y	A100-200/A	A100-200/A/Y	A100-200/C	A100-200/C/Y

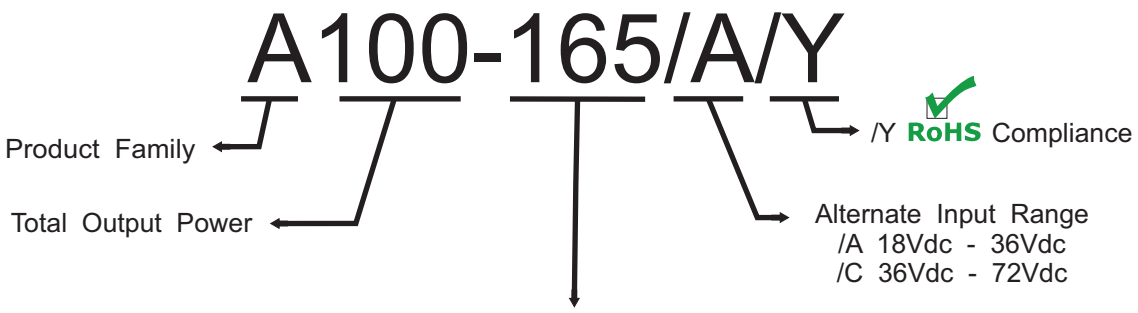

Customer Selects Output Voltage

The A100 Series are designed such that the customer may order any output voltage from 48Vdc to 200Vdc at no additional charge.

A100 SERIES 100 WATT HIGH VOLTAGE DC/DC CONVERTERS

STANDARD PC MOUNT

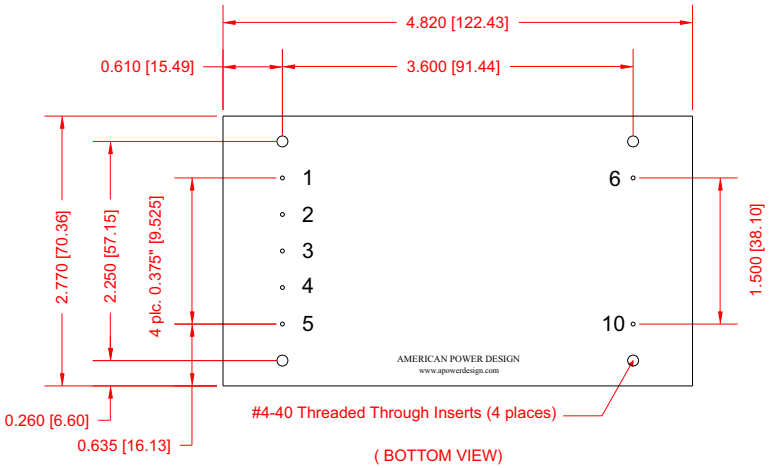

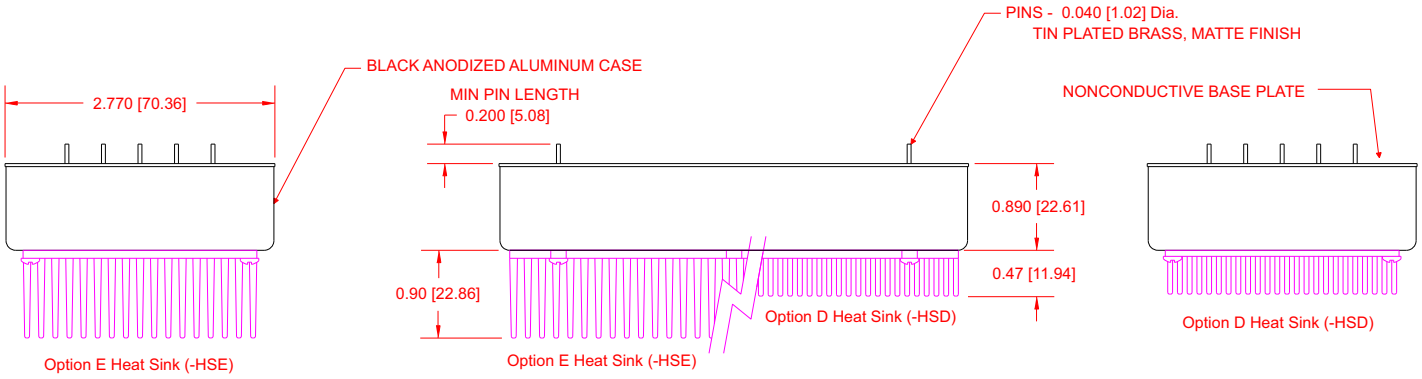

PIN #	FUNCTION	PIN #	FUNCTION
1	- Input	6	- Output
2	- Input	7	No Pin
3	+ Input	8	No Pin
4	+ Input	9	No Pin
5	On/Off	10	+ Output

Dimensions are in Inches
[Metric equivalents in brackets]

A100 SERIES 100 WATT HIGH VOLTAGE DC/DC CONVERTERS

-TS CHASSIS MOUNT OPTION

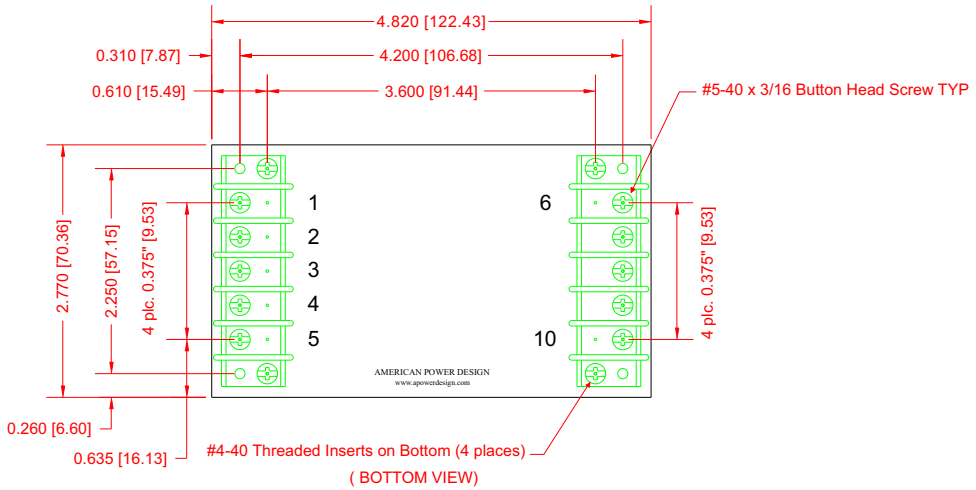

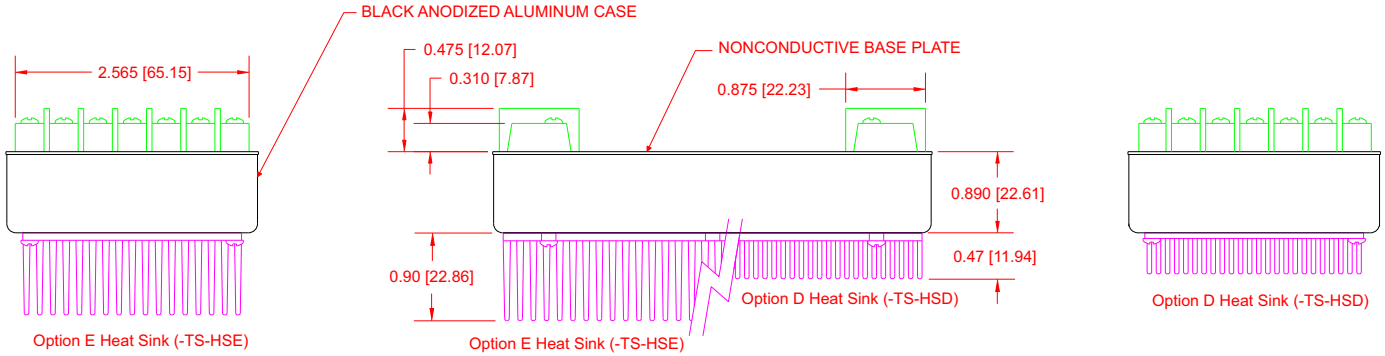

PIN #	FUNCTION	PIN #	FUNCTION
1	- Input	6	- Output
2	- Input	7	No Pin
3	+ Input	8	No Pin
4	+ Input	9	No Pin
5	On/Off	10	+ Output

Dimensions are in Inches
[Metric equivalents in brackets]

A100 SERIES 100 WATT HIGH VOLTAGE DC/DC CONVERTERS

APPLICATION NOTES

INPUT AND OUTPUT IMPEDANCE

The A100 Series of power converters have been designed to be stable with no external capacitors when used in low inductance input and output circuits. However, in some applications, the inductance associated with the distribution from the power source to the input of the converter can affect the stability of the converter. The addition of a 100 µF electrolytic capacitor with an ESR <1 Ohm across the input helps ensure stability of the converter. In many applications, the user has to use decoupling capacitance at the load.

SHORT CIRCUIT PROTECTION

The A100 Series is equipped with short circuit protection. The converter will fold-back the input power whenever a short circuit is applied to its output and automatically recover after the overload condition is removed.

ISOLATION

The output of the A100 Series is galvanically isolated from both the input and case, capacitance is < 100pF and resistance is > 10G Ohm. The converters case is connected directly to -In to aid in reducing unwanted noise.

RIPPLE AND NOISE

Figure below shows a typical output voltage ripple waveform, measured at full rated load current with no additional output filtering. External low ESR capacitors may be added across output to further reduce ripple.

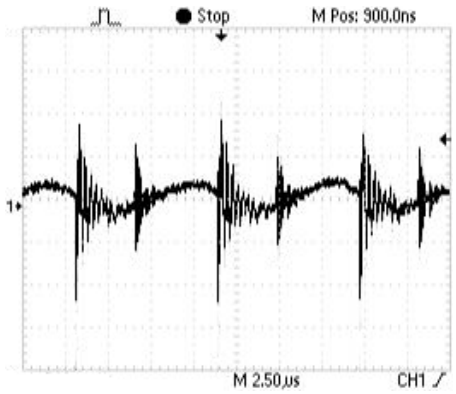

STARTUP TRANSIENT

Figure below shows a typical output voltage during turn-on, measured at no load current with no additional output filtering.

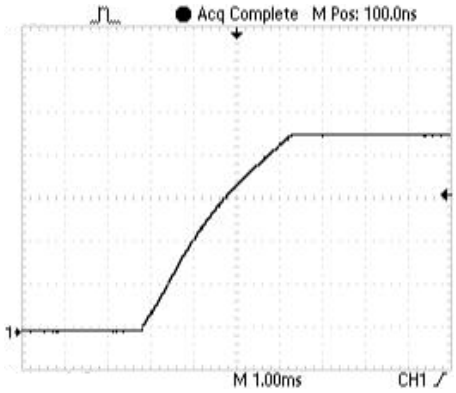

Figure below shows a typical output voltage during turn-on, measured at full rated load current with no additional output filtering.

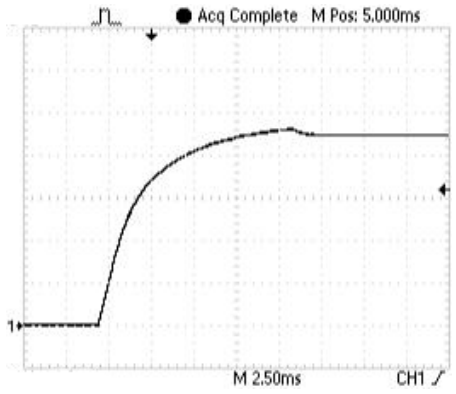

A100 SERIES 100 WATT HIGH VOLTAGE DC/DC CONVERTERS

APPLICATION NOTES

INRUSH CURRENT

The inrush current of the A100 Series has been kept as low as possible. However, a series resistor may be inserted in the input line to limit this current further.

LOAD TRANSIENT

Figure below shows a typical output voltage response, measured during a transition from full rated load current to no load current with no additional output filtering.

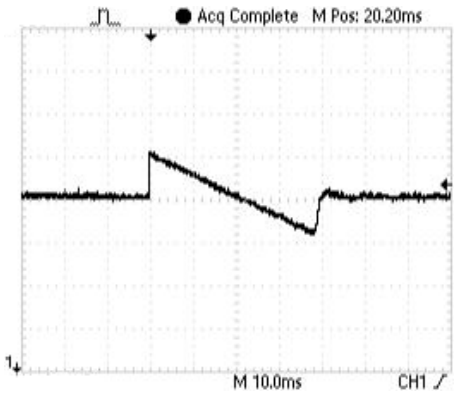

Figure below shows a typical output voltage response, measured during a transition from no load current to full rated load current with no additional output filtering.

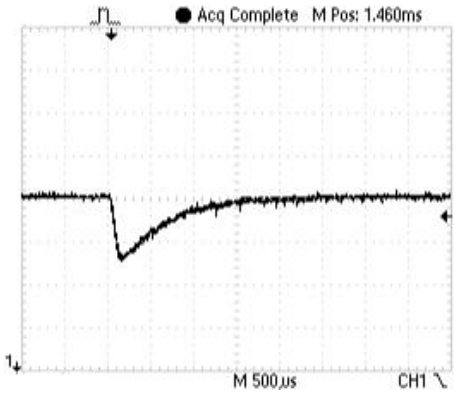

CONNECTION IN PARALLEL

The figure below shows how to connect outputs of several units with equal nominal output voltage in parallel with the use of oring diodes.

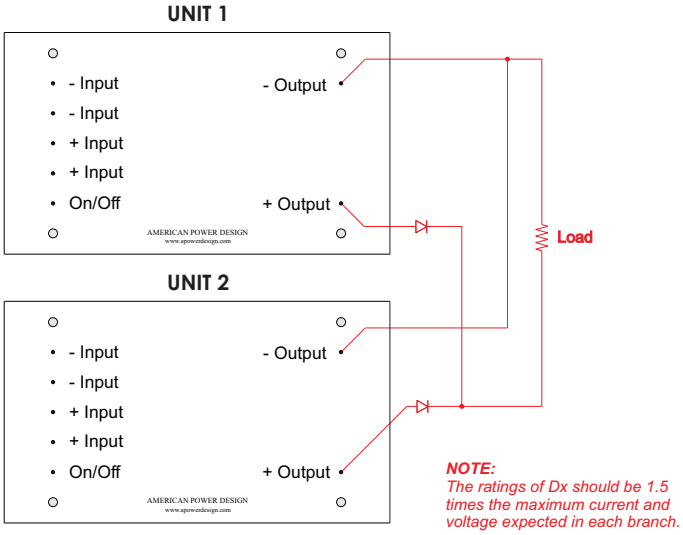

CONNECTION IN SERIES

Figure below shows how to connect multiple outputs in series with the use of shunt diodes, taking into consideration that the highest achieved output voltage should remain below the rated isolation voltage.

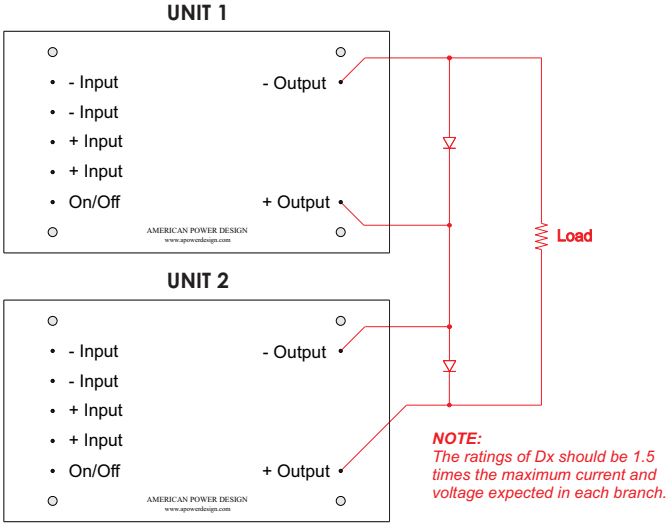

A100 SERIES 100 WATT HIGH VOLTAGE DC/DC CONVERTERS

APPLICATION NOTES

REMOTE ON/OFF CONTROL

The On/Off control (Pin 5) allows the user to shut down the converter mechanically or logically using a relay or a TTL or CMOS logic signal.

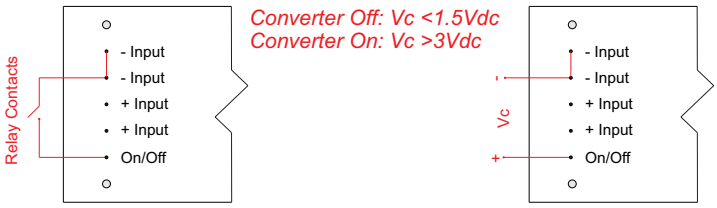

CLEANING AGENTS

In order to avoid possible damage, any penetration of cleaning fluids must be prevented, since the power supplies are not hermetically sealed.

NUCLEAR AND MEDICAL APPLICATIONS

American Power Design products are not designed, intended for use in, or authorized for use as critical components in life support systems, equipment used in hazardous environments, or nuclear control systems without the express written consent of American Power Design, Inc.

TECHNICAL REVISIONS

The appearance of products, including safety agency certifications pictured on labels, may change depending on the date manufactured. Specifications are subject to change without notice.

SAFETY REQUIREMENTS

The converters are designed to meet North American and International safety regulatory requirements per UL 60950-1/CSA 22.2 No. 60950-1-07 Second Edition, IEC 60950-1: 2005, and EN 60950-1:2006. Basic Insulation is provided between input and output. To comply with safety agencies requirements, an input line fuse must be used external to the converter. The table below provides the recommended fuse rating for use with this family of products.

Input Voltage Range	Fuse Rating
10-20Vdc	18A
18-36Vdc	10A
36-72Vdc	5A

If one input fuse is used for a group of modules, the maximum fuse rating should not exceed 20A.

WARRANTY

All products manufactured by American Power Design, Inc. (APD) are warranted to be free of defects due to material or workmanship for a period of one year from date of shipment. At our option, APD will repair or replace any non-conforming product.
APD expressly disclaims any liability for consequential or incidental damages resulting from the use or misuse of its products by the purchaser or others.
This warranty is in lieu of all warranties expressed or implied, including the warranties of merchantability. No other warranties, obligations, or liabilities are expressed or implied.
All products being returned for repair require a return material authorization(RMA) assigned by APD prior to return shipment.

American Power Design, Inc.

"The best high voltage design solution"

RoHS

C30 SERIES 30 WATT DC/DC CONVERTERS

FEATURES

- Customer Selects Output Voltage
- Outputs to 28 Vdc
- Wide Input Ranges
  (10-20Vdc, 18-36Vdc, 20-60Vdc, 36-72Vdc)
- Excellent Line & Load Regulation
- 500 Vdc Output Isolation
- Continuous Short Circuit Protection
- Thermal Shutdown *(Self-Resetting)*
- Available in Chassis Mount

The C30 Series of DC/DC converters offers a single output to 28Vdc and 500Vdc of isolation. They are available in either PC or Chassis mount configurations. Their rugged enclosure, low output ripple, and excellent regulation characteristics make them ideally suited for harsh environment applications that demand a high degree of performance. All models will tolerate a short circuit indefinitely.

ELECTRICAL SPECIFICATIONS

Voltage Accuracy	+/-1%
Line Regulation	+/- 0.1%
Load Regulation	+/- 0.1%
Output Ripple	< 100mV P-P
Output Trim	+/-10%
Input Filter	PI Network
Efficiency	83% (typ.)
Short Circuit Protection	Continuous
Switching Frequency	130 kHz
Output Isolation	500 Vdc
Input / Output Capacitance	< 1300pF

GENERAL SPECIFICATIONS

Temp. Stability	+/-0.02%/°C
Temp. (Operating , Case)	-40 to +85°C
Temp. (Storage)	-40 to +125°C
Logic Shutdown	Logic 0 (off)
EMI/RFI	Six Sided Shield
Derating	None
Cooling	Free-Air Convection or Forced Air
Thermal Shut Down	100°C/+/- 5°C *(Self-Resetting)*

PHYSICAL SPECIFICATIONS

Dimensions	2.75 x 4.8 x 0.92 inches
Weight	13.5 Oz
Case Material	Black Coated Metal *(With Non-Conductive Base Plate)*

C30 SERIES 30 WATT DC/DC CONVERTERS

REPRESENTATIVE MODEL LISTING

OUTPUT SPECIFICATIONS		MODEL NUMBER / INPUT RANGE							
		10-20VDC		18-36VDC		20-60VDC		36-72VDC	
VOLTAGE	CURRENT	Non-RoHs	RoHs	Non-RoHs	RoHs	Non-RoHs	RoHs	Non-RoHs	RoHs
3.3 Vdc	9 A	C30-3.3	C30-3.3/Y	C30-3.3/A	C30-3.3/A/Y	C30-3.3/B	C30-3.3/B/Y	C30-3.3/C	C30-3.3/C/Y
5 Vdc	6 A	C30-5	C30-5/Y	C30-5/A	C30-5/A/Y	C30-5/B	C30-5/B/Y	C30-5/C	C30-5/C/Y
6 Vdc	5 A	C30-6	C30-6/Y	C30-6/A	C30-6/A/Y	C30-6/B	C30-6/B/Y	C30-6/C	C30-6/C/Y
9 Vdc	3.3 A	C30-9	C30-9/Y	C30-9/A	C30-9/A/Y	C30-9/B	C30-9/B/Y	C30-9/C	C30-9/C/Y
12 Vdc	2.5 A	C30-12	C30-12/Y	C30-12/A	C30-12/A/Y	C30-12/B	C30-12/B/Y	C30-12/C	C30-12/C/Y
15 Vdc	2.0 A	C30-15	C30-15/Y	C30-15/A	C30-15/A/Y	C30-15/B	C30-15/B/Y	C30-15/C	C30-15/C/Y
18 Vdc	1.6 A	C30-18	C30-18/Y	C30-18/A	C30-18/A/Y	C30-18/B	C30-18/B/Y	C30-18/C	C30-18/C/Y
21 Vdc	1.4 A	C30-21	C30-21/Y	C30-21/A	C30-21/A/Y	C30-21/B	C30-21/B/Y	C30-21/C	C30-21/C/Y
24 Vdc	1.2 A	C30-24	C30-24/Y	C30-24/A	C30-24/A/Y	C30-24/B	C30-24/B/Y	C30-24/C	C30-24/C/Y
28 Vdc	1.1 A	C30-28	C30-28/Y	C30-28/A	C30-28/A/Y	C30-28/B	C30-28/B/Y	C30-28/C	C30-28/C/Y

C30-12/A/Y

Product Family

Total Output Power

/Y RoHS Compliance

Alternate Input Range
/A 18Vdc - 36Vdc
/B 20Vdc - 60Vdc
/C 36Vdc - 72Vdc

Customer Selects Output Voltage

The C30 Series are designed such that the customer may order any output voltage from 3.3Vdc to 28Vdc at no additional charge.

C30 SERIES 30 WATT DC/DC CONVERTERS

STANDARD PC MOUNT

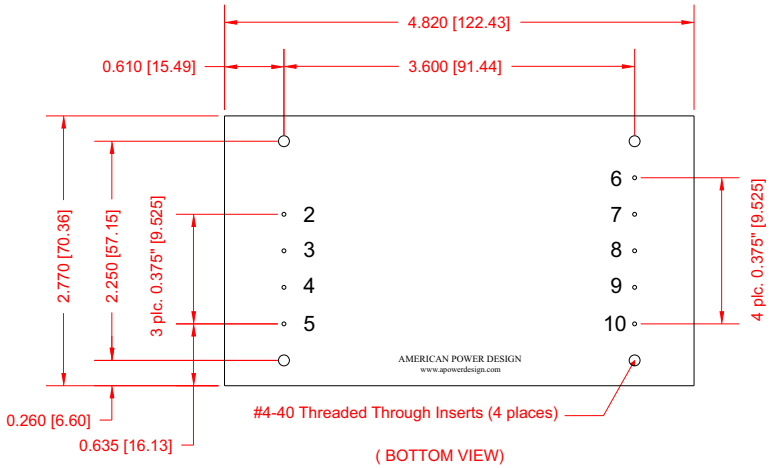

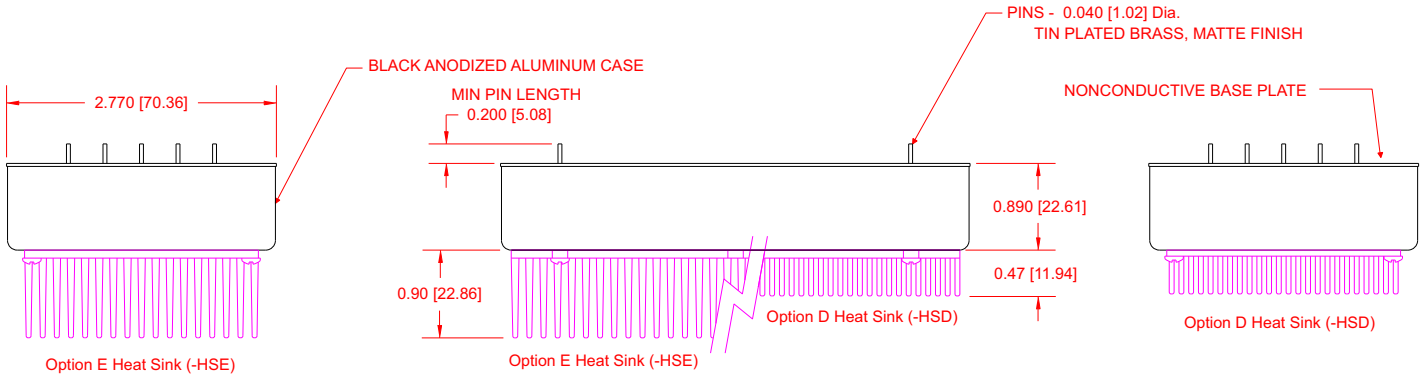

PIN #	FUNCTION	PIN #	FUNCTION
1	No Pin	6	-V Out
2	- Input	7	+ V Out
3	+ Input	8	- Sense
4	On / Off	9	Trim
5	Case	10	+ Sense

Dimensions are in Inches
[Metric equivalents in brackets]

C30 SERIES 30 WATT DC/DC CONVERTERS

-TS CHASSIS MOUNT OPTION

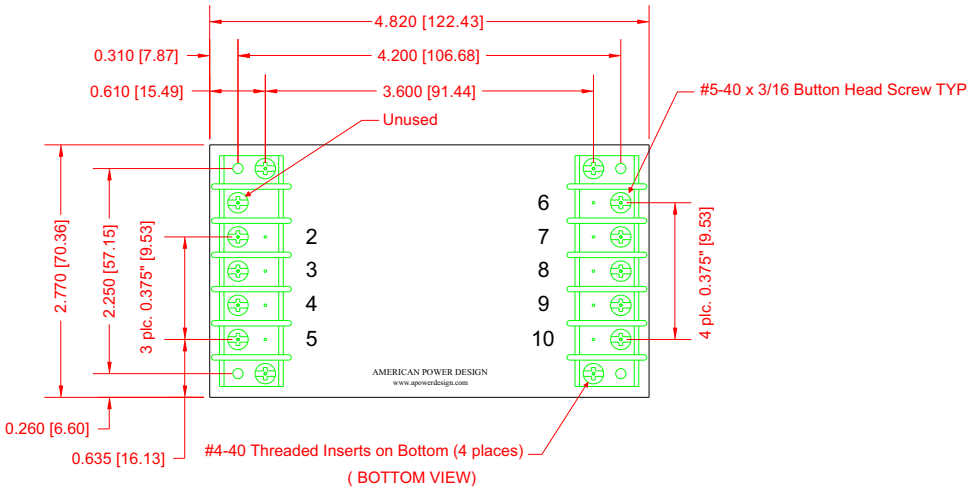

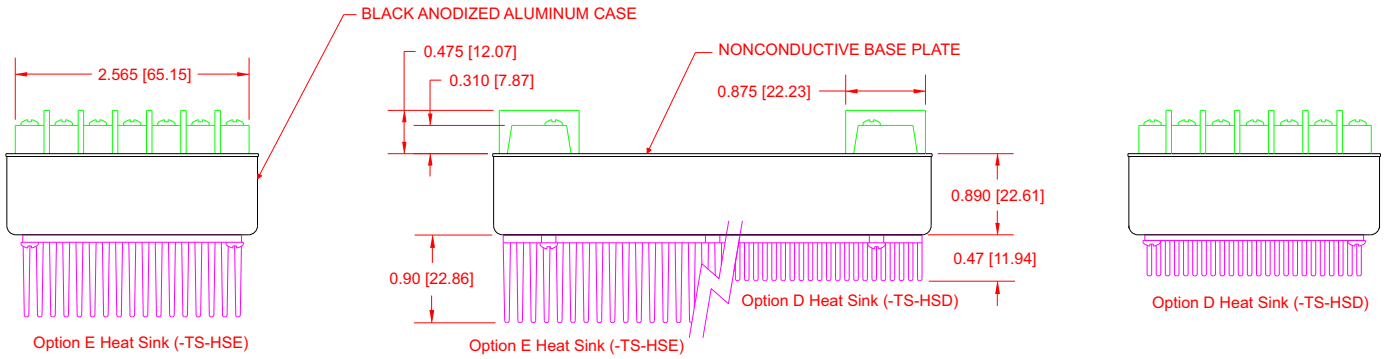

PIN #	FUNCTION	PIN #	FUNCTION
1	No Pin	6	-V Out
2	- Input	7	+ V Out
3	+ Input	8	- Sense
4	On / Off	9	Trim
5	Case	10	+ Sense

Dimensions are in Inches
[Metric equivalents in brackets]

C30 SERIES 30 WATT DC/DC CONVERTERS

APPLICATION NOTES

INPUT AND OUTPUT IMPEDANCE

The C30 Series of power converters have been designed to be stable with no external capacitors when used in low inductance input and output circuits. However, in some applications, the inductance associated with the distribution from the power source to the input of the converter can affect the stability of the converter. The addition of a 100 µF electrolytic capacitor with an ESR <1 Ohm across the input helps ensure stability of the converter. In many applications, the user has to use decoupling capacitance at the load.

SHORT CIRCUIT PROTECTION

The C30 Series is equipped with short circuit protection. The converter will fold-back the input power whenever a short circuit is applied to its output and automatically recover after the overload condition is removed.

ISOLATION

The output of the C30 Series is galvanically isolated from both the input and case, capacitance is < 1300pF and resistance is > 10G Ohm.
The figure below shows the internal RC network that connects the Case (Pin 5) to Input(-) (Pin 2). This aides in reducing unwanted noise.

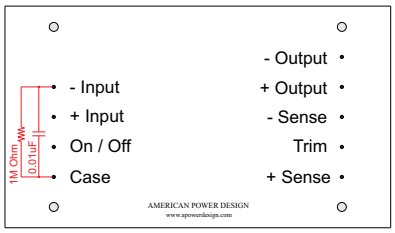

INRUSH CURRENT

The inrush current of the C30 Series has been kept as low as possible. However, a series resistor may be inserted in the input line to limit this current further.

REMOTE SENSING

The C30 Series is equipped with remote sensing, this feature compensates for voltage drops occurring between the output pins of the converter and the load.
The SENSE(-) (Pin 8) and SENSE(+) (Pin 10) should be connected at the load or at the point where regulation is required.

The feedback through the sensing pins allows the converter to output a higher voltage at the output pins to compensate for the voltage drop on the connections between the converters output and the load. It will compensate for up to 0.5V drop between the converter and the load.

Because the sense leads carry minimal current, large traces on the end-user board are not required. However, sense traces should be located close to a ground plane to minimize system noise and insure optimum performance. When wiring discretely, twisted pair wires should be used to connect the sense lines to the load to reduce susceptibility to noise.

The figure below shows the correct method of installation using this option.

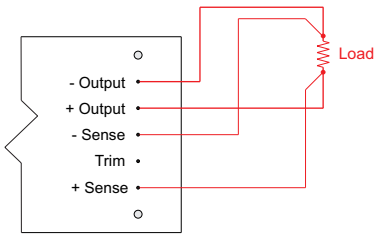

NOTE:
Always disconnect the sense wires before disconnecting the output wires when the unit is under power. otherwise, the supply may be permanently damaged

If remote sensing is not required, the SENSE(-) (Pin 8) must be connected to the Output(-) (Pin 6), and the SENSE(+) (Pin 10) must be connected to the Output(+) (Pin 7) to ensure the converter will regulate at the specified output voltage. If these connections are not made, the converter will deliver an output voltage that is slightly higher than the specified value.

C30 SERIES 30 WATT DC/DC CONVERTERS

APPLICATION NOTES

REMOTE ON/OFF CONTROL

The On/Off control (Pin 4) allows the user to shut down the converter mechanically or logically using a relay or a TTL or CMOS logic signal.

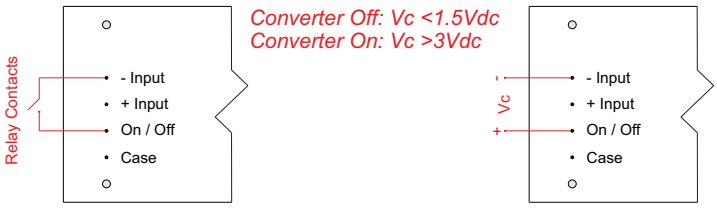

TRIM OUTPUT

The C30 Series is equipped with an output trim pin (Pin 9), this feature allows the user to adjust the output voltage up or down 10% using a fixed precision resistor or adjustable trim pot.

The figure below shows how to adjust the output voltage using a fixed precision resistor.

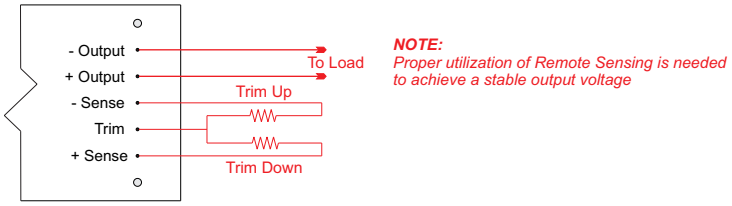

The figure below shows how to adjust the output voltage using an external Trim Pot.

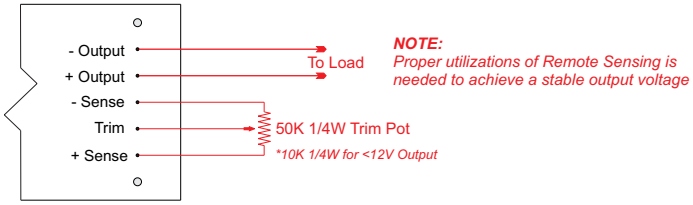

CONNECTION IN SERIES

Figure below shows how to connect multiple outputs in series with the use of shunt diodes, taking into consideration that the highest achieved output voltage should remain below the rated isolation voltage.

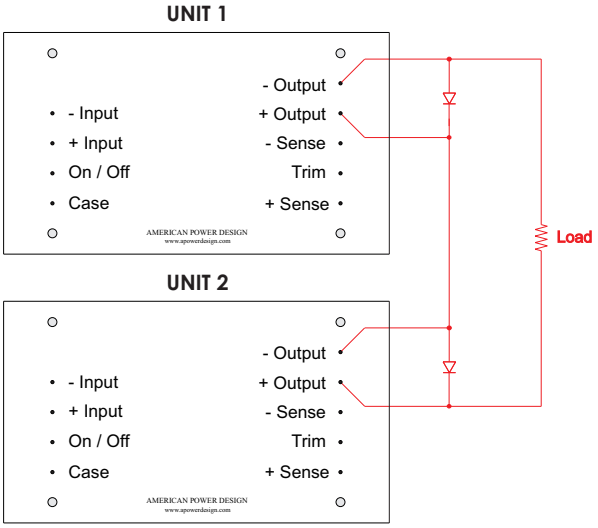

CONNECTION IN PARALLEL

The figure below show how to connect outputs of several units with equal nominal output voltage in parallel with the use of oring diodes.

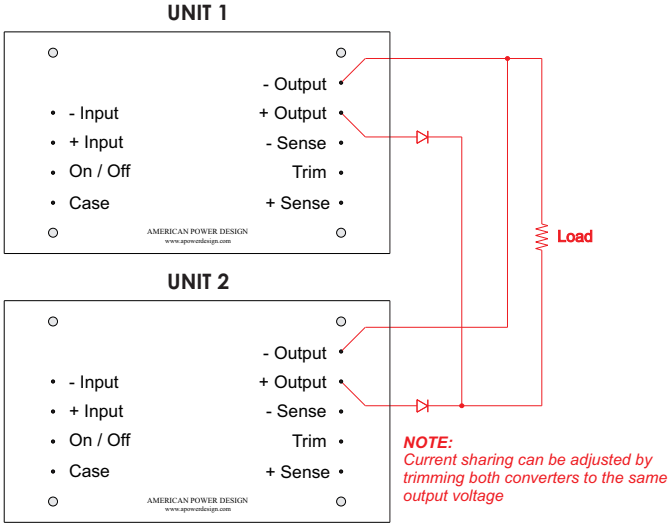

C30 SERIES 30 WATT DC/DC CONVERTERS

APPLICATION NOTES

LOAD TRANSIENT

Figure below shows a typical output voltage response, measured during a transition from full rated load current to no load current with no additional output filtering.

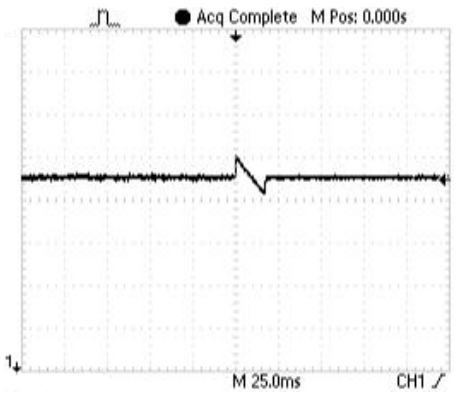

STARTUP TRANSIENT

Figure below shows a typical output voltage during turn-on, measured at no load current with no additional output filtering.

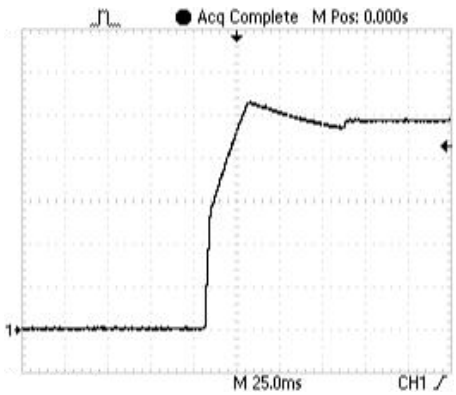

Figure below shows a typical output voltage response, measured during a transition from no load current to full rated load current with no additional output filtering.

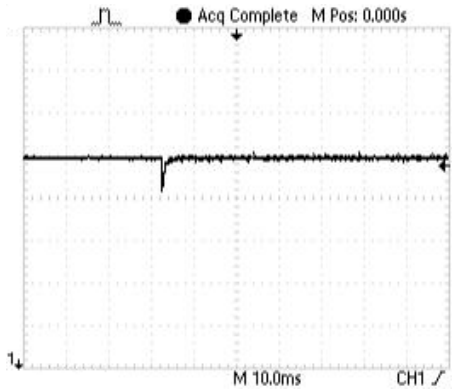

Figure below shows a typical output voltage during turn-on, measured at full rated load current with no additional output filtering.

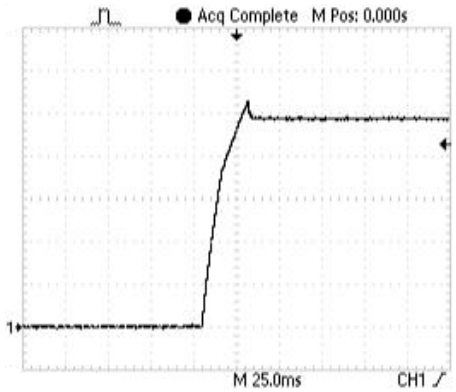

C30 SERIES 30 WATT DC/DC CONVERTERS

APPLICATION NOTES

RIPPLE AND NOISE

Figure below shows a typical output voltage ripple waveform, measured with 20MHz bandwidth filter at full rated load current with no additional output filtering. External low ESR capacitors may be added across output to further reduce ripple.

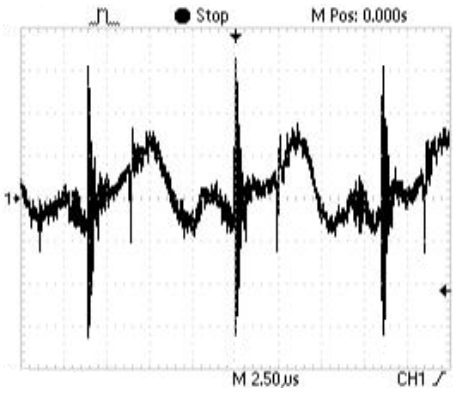

NUCLEAR AND MEDICAL APPLICATIONS

American Power Design products are not designed, intended for use in, or authorized for use as critical components in life support systems, equipment used in hazardous environments, or nuclear control systems without the express written consent of American Power Design, Inc.

CLEANING AGENTS

In order to avoid possible damage, any penetration of cleaning fluids must be prevented, since the power supplies are not hermetically sealed.

TECHNICAL REVISIONS

The appearance of products, including safety agency certifications pictured on labels, may change depending on the date manufactured. Specifications are subject to change without notice.

SAFETY REQUIREMENTS

The converters are designed to meet North American and International safety regulatory requirements per UL 60950-1/CSA 22.2 No. 60950-1-07 Second Edition, IEC 60950-1: 2005, and EN 60950-1:2006. Basic Insulation is provided between input and output. To comply with safety agencies requirements, an input line fuse must be used external to the converter. The table below provides the recommended fuse rating for use with this family of products.

Input Voltage Range	Fuse Rating
10-20Vdc	6A
18-36Vdc	4A
20-60Vdc	2A
36-72Vdc	1.5A

If one input fuse is used for a group of modules, the maximum fuse rating should not exceed 20A.

WARRANTY

All products manufactured by American Power Design, Inc. (APD) are warranted to be free of defects due to material or workmanship for a period of one year from date of shipment. At our option, APD will repair or replace any non-conforming product.
APD expressly disclaims any liability for consequential or incidental damages resulting from the use or misuse of its products by the purchaser or others.
This warranty is in lieu of all warranties expressed or implied, including the warranties of merchantability. No other warranties, obligations, or liabilities are expressed or implied.
All products being returned for repair require a return material authorization(RMA) assigned by APD prior to return shipment.

American Power Design, Inc.

"The best high voltage design solution"

RoHS

C50 SERIES 50 WATT DC/DC CONVERTERS

FEATURES

- Customer Selects Output Voltage
- Outputs to 28 Vdc
- Wide Input Ranges
  (10-20Vdc, 18-36Vdc, 20-60Vdc, 36-72Vdc)
- Excellent Line & Load Regulation
- 500 Vdc Output Isolation
- Continuous Short Circuit Protection
- Thermal Shutdown *(Self-Resetting)*
- Available in Chassis Mount

The C50 Series of DC/DC converters offers a single output to 28Vdc and 500Vdc of isolation. They are available in either PC or Chassis mount configurations. Their rugged enclosure, low output ripple, and excellent regulation characteristics make them ideally suited for harsh environment applications that demand a high degree of performance. All models will tolerate a short circuit indefinitely.

ELECTRICAL SPECIFICATIONS

Voltage Accuracy	+/- 1%
Line Regulation	+/- 0.1%
Load Regulation	+/- 0.1%
Output Ripple	< 100mV P-P
Output Trim	+/-10%
Input Filter	PI Network
Efficiency	85% (typ.)
Short Circuit Protection	Continuous
Switching Frequency	130 kHz
Output Isolation	500 Vdc
Input / Output Capacitance	< 1300pF

GENERAL SPECIFICATIONS

Temp. Stability	+/-0.02%/°C
Temp. (Operating , Case)	-40 to +85°C
Temp. (Storage)	-40 to +125°C
Logic Shutdown	Logic 0 (off)
EMI/RFI	Six Sided Shield
Derating	None
Cooling	Free-Air Convection or Forced Air
Thermal Shut Down	100°C/+/- 5°C *(Self-Resetting)*

PHYSICAL SPECIFICATIONS

Dimensions	2.75 x 4.8 x 0.92 inches
Weight	13.5 Oz
Case Material	Black Coated Metal *(With Non-Conductive Base Plate)*

C50 SERIES 50 WATT DC/DC CONVERTERS

REPRESENTATIVE MODEL LISTING

OUTPUT SPECIFICATIONS		MODEL NUMBER / INPUT RANGE							
		10-20VDC		18-36VDC		20-60VDC		36-72VDC	
VOLTAGE	CURRENT	Non-RoHs	RoHs	Non-RoHs	RoHs	Non-RoHs	RoHs	Non-RoHs	RoHs
3.3 Vdc	15 A	C50-3.3	C50-3.3/Y	C50-3.3/A	C50-3.3/A/Y	C50-3.3/B	C50-3.3/B/Y	C50-3.3/C	C50-3.3/C/Y
5 Vdc	10 A	C50-5	C50-5/Y	C50-5/A	C50-5/A/Y	C50-5/B	C50-5/B/Y	C50-5/C	C50-5/C/Y
6 Vdc	8.3 A	C50-6	C50-6/Y	C50-6/A	C50-6/A/Y	C50-6/B	C50-6/B/Y	C50-6/C	C50-6/C/Y
9 Vdc	5.5 A	C50-9	C50-9/Y	C50-9/A	C50-9/A/Y	C50-9/B	C50-9/B/Y	C50-9/C	C50-9/C/Y
12 Vdc	4.2 A	C50-12	C50-12/Y	C50-12/A	C50-12/A/Y	C50-12/B	C50-12/B/Y	C50-12/C	C50-12/C/Y
15 Vdc	3.3 A	C50-15	C50-15/Y	C50-15/A	C50-15/A/Y	C50-15/B	C50-15/B/Y	C50-15/C	C50-15/C/Y
18 Vdc	2.8 A	C50-18	C50-18/Y	C50-18/A	C50-18/A/Y	C50-18/B	C50-18/B/Y	C50-18/C	C50-18/C/Y
21 Vdc	2.4 A	C50-21	C50-21/Y	C50-21/A	C50-21/A/Y	C50-21/B	C50-21/B/Y	C50-21/C	C50-21/C/Y
24 Vdc	2.1 A	C50-24	C50-24/Y	C50-24/A	C50-24/A/Y	C50-24/B	C50-24/B/Y	C50-24/C	C50-24/C/Y
28 Vdc	1.8 A	C50-28	C50-28/Y	C50-28/A	C50-28/A/Y	C50-28/B	C50-28/B/Y	C50-28/C	C50-28/C/Y

C50-12/A/Y

Product Family

Total Output Power

/Y RoHS Compliance

Alternate Input Range
/A 18Vdc - 36Vdc
/B 20Vdc - 60Vdc
/C 36Vdc - 72Vdc

Customer Selects Output Voltage

The C50 Series are designed such that the customer may order any output voltage from 3.3Vdc to 28Vdc at no additional charge.

C50 SERIES 50 WATT DC/DC CONVERTERS

STANDARD PC MOUNT

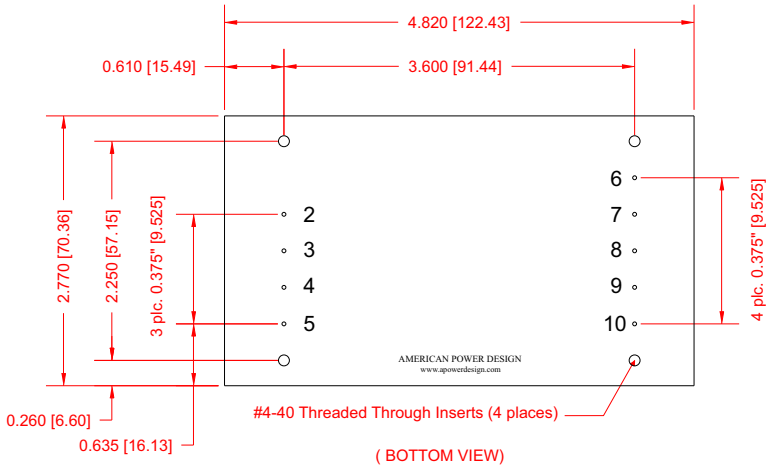

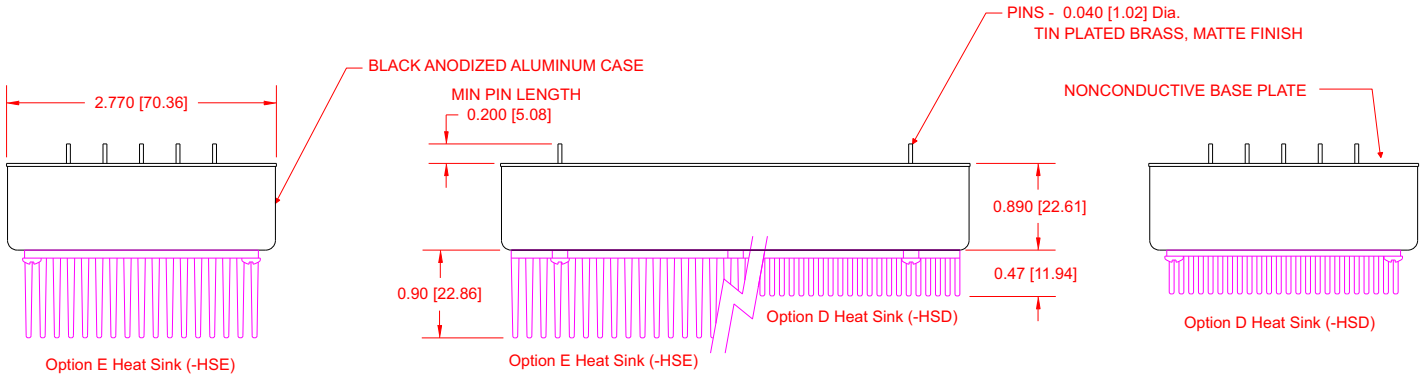

PIN #	FUNCTION	PIN #	FUNCTION
1	No Pin	6	-V Out
2	- Input	7	+ V Out
3	+ Input	8	- Sense
4	On / Off	9	Trim
5	Case	10	+ Sense

Dimensions are in Inches
[Metric equivalents in brackets]

C50 SERIES 50 WATT DC/DC CONVERTERS

-TS CHASSIS MOUNT OPTION

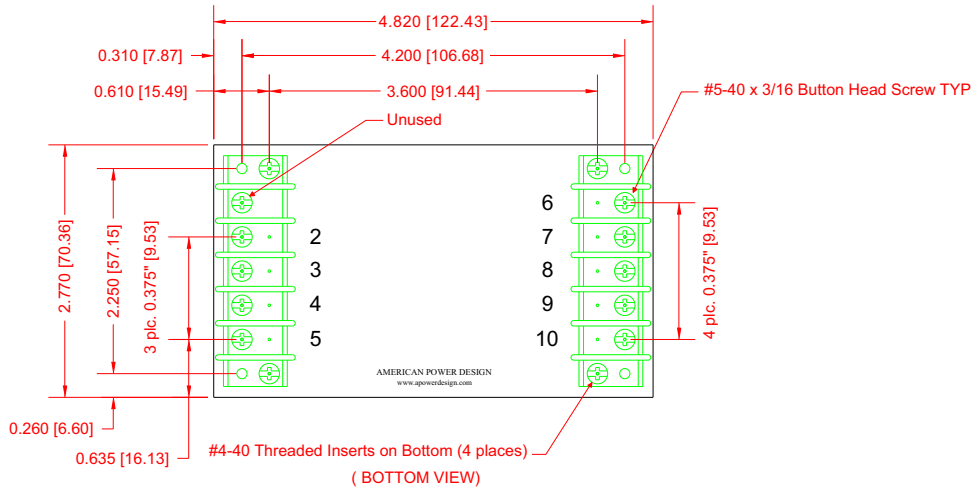

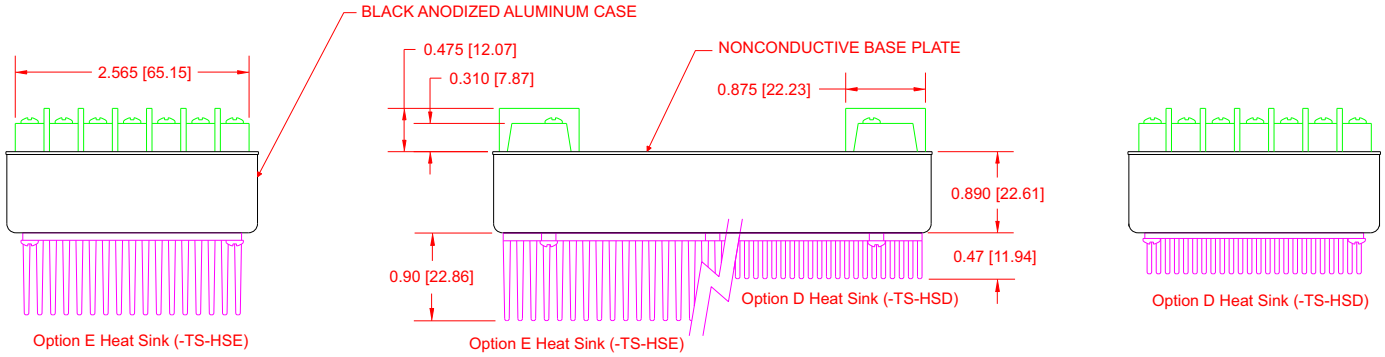

PIN #	FUNCTION	PIN #	FUNCTION
1	No Pin	6	-V Out
2	- Input	7	+ V Out
3	+ Input	8	- Sense
4	On / Off	9	Trim
5	Case	10	+ Sense

Dimensions are in Inches
[Metric equivalents in brackets]

C50 SERIES 50 WATT DC/DC CONVERTERS

APPLICATION NOTES

INPUT AND OUTPUT IMPEDANCE

The C50 Series of power converters have been designed to be stable with no external capacitors when used in low inductance input and output circuits. However, in some applications, the inductance associated with the distribution from the power source to the input of the converter can affect the stability of the converter. The addition of a 100 µF electrolytic capacitor with an ESR <1 Ohm across the input helps ensure stability of the converter. In many applications, the user has to use decoupling capacitance at the load.

SHORT CIRCUIT PROTECTION

The C50 Series is equipped with short circuit protection. The converter will fold-back the input power whenever a short circuit is applied to its output and automatically recover after the overload condition is removed.

ISOLATION

The output of the C50 Series is galvanically isolated from both the input and case, capacitance is < 1300pF and resistance is > 10G Ohm.
The figure below shows the internal RC network that connects the Case (Pin 5) to Input(-) (Pin 2). This aides in reducing unwanted noise.

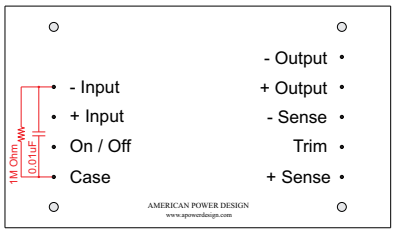

INRUSH CURRENT

The inrush current of the C50 Series has been kept as low as possible. However, a series resistor may be inserted in the input line to limit this current further.

REMOTE SENSING

The C50 Series is equipped with remote sensing, this feature compensates for voltage drops occurring between the output pins of the converter and the load.
The SENSE(-) (Pin 8) and SENSE(+) (Pin 10) should be connected at the load or at the point where regulation is required.

The feedback through the sensing pins allows the converter to output a higher voltage at the output pins to compensate for the voltage drop on the connections between the converters output and the load. It will compensate for up to 0.5V drop between the converter and the load.

Because the sense leads carry minimal current, large traces on the end-user board are not required. However, sense traces should be located close to a ground plane to minimize system noise and insure optimum performance. When wiring discretely, twisted pair wires should be used to connect the sense lines to the load to reduce susceptibility to noise.

The figure below shows the correct method of installation using this option.

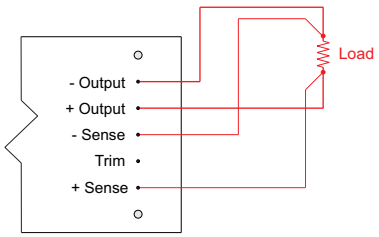

NOTE:
Always disconnect the sense wires before disconnecting the output wires when the unit is under power. otherwise, the supply may be permanently damaged

If remote sensing is not required, the SENSE(-) (Pin 8) must be connected to the Output(-) (Pin 6), and the SENSE(+) (Pin 10) must be connected to the Output(+) (Pin 7) to ensure the converter will regulate at the specified output voltage. If these connections are not made, the converter will deliver an output voltage that is slightly higher than the specified value.

C50 SERIES 50 WATT DC/DC CONVERTERS

APPLICATION NOTES

REMOTE ON/OFF CONTROL

The On/Off control (Pin 4) allows the user to shut down the converter mechanically or logically using a relay or a TTL or CMOS logic signal.

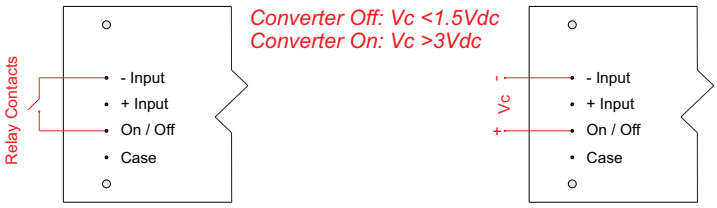

TRIM OUTPUT

The C50 Series is equipped with an output trim pin (Pin 9), this feature allows the user to adjust the output voltage up or down 10% using a fixed precision resistor or adjustable trim pot.

The figure below shows how to adjust the output voltage using a fixed precision resistor.

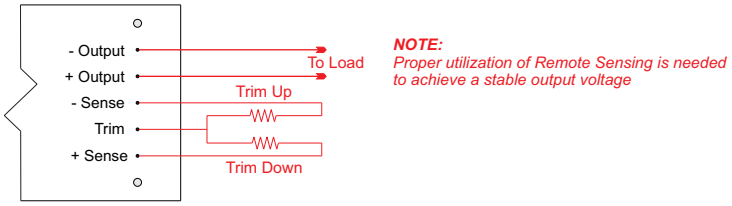

The figure below shows how to adjust the output voltage using an external Trim Pot.

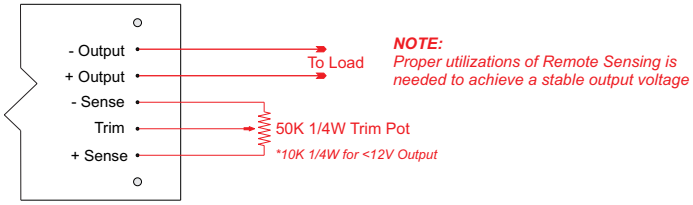

CONNECTION IN SERIES

Figure below shows how to connect multiple outputs in series with the use of shunt diodes, taking into consideration that the highest achieved output voltage should remain below the rated isolation voltage.

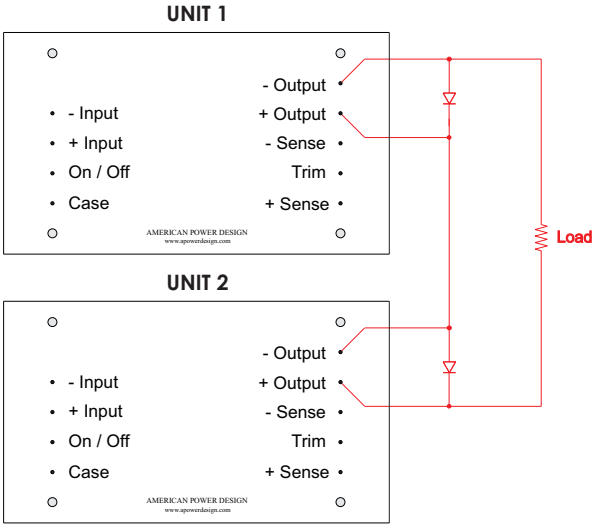

CONNECTION IN PARALLEL

The figure below show how to connect outputs of several units with equal nominal output voltage in parallel with the use of oring diodes.

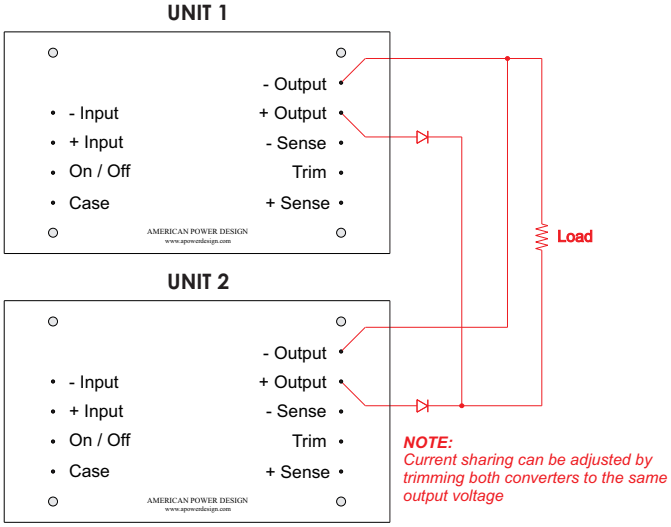

C50 SERIES 50 WATT DC/DC CONVERTERS

APPLICATION NOTES

LOAD TRANSIENT

Figure below shows a typical output voltage response, measured during a transition from full rated load current to no load current with no additional output filtering.

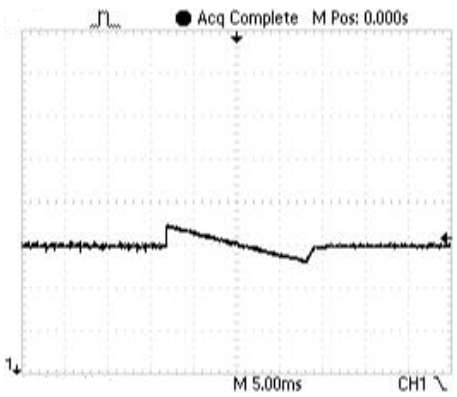

STARTUP TRANSIENT

Figure below shows a typical output voltage during turn-on, measured at no load current with no additional output filtering.

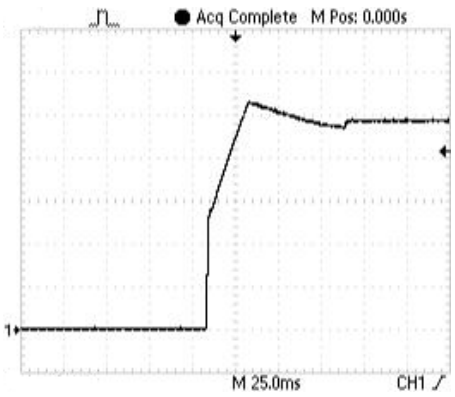

Figure below shows a typical output voltage response, measured during a transition from no load current to full rated load current with no additional output filtering.

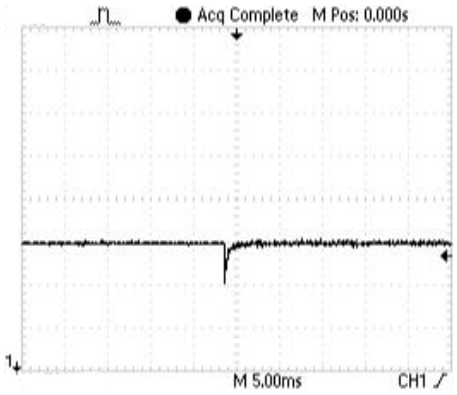

Figure below shows a typical output voltage during turn-on, measured at full rated load current with no additional output filtering.

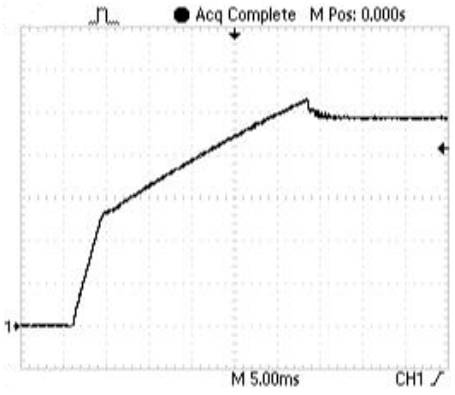

C50 SERIES 50 WATT DC/DC CONVERTERS

APPLICATION NOTES

RIPPLE AND NOISE

Figure below shows a typical output voltage ripple waveform, measured with 20MHz bandwidth filter at full rated load current with no additional output filtering. External low ESR capacitors may be added across output to further reduce ripple.

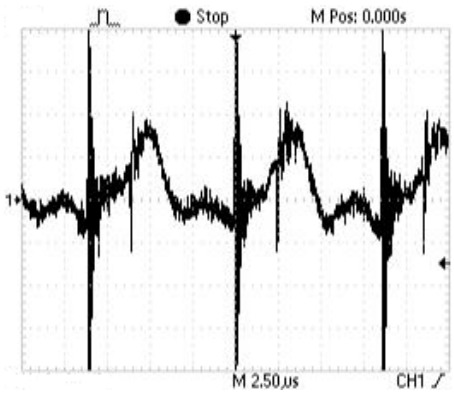

NUCLEAR AND MEDICAL APPLICATIONS

American Power Design products are not designed, intended for use in, or authorized for use as critical components in life support systems, equipment used in hazardous environments, or nuclear control systems without the express written consent of American Power Design, Inc.

CLEANING AGENTS

In order to avoid possible damage, any penetration of cleaning fluids must be prevented, since the power supplies are not hermetically sealed.

TECHNICAL REVISIONS

The appearance of products, including safety agency certifications pictured on labels, may change depending on the date manufactured. Specifications are subject to change without notice.

SAFETY REQUIREMENTS

The converters are designed to meet North American and International safety regulatory requirements per UL 60950-1/CSA 22.2 No. 60950-1-07 Second Edition, IEC 60950-1: 2005, and EN 60950-1:2006. Basic Insulation is provided between input and output. To comply with safety agencies requirements, an input line fuse must be used external to the converter. The table below provides the recommended fuse rating for use with this family of products.

Input Voltage Range	Fuse Rating
10-20Vdc	10A
18-36Vdc	6A
20-60Vdc	4A
36-72Vdc	2.5A

If one input fuse is used for a group of modules, the maximum fuse rating should not exceed 20A.

WARRANTY

All products manufactured by American Power Design, Inc. (APD) are warranted to be free of defects due to material or workmanship for a period of one year from date of shipment. At our option, APD will repair or replace any non-conforming product.
APD expressly disclaims any liability for consequential or incidental damages resulting from the use or misuse of its products by the purchaser or others.
This warranty is in lieu of all warranties expressed or implied, including the warranties of merchantability. No other warranties, obligations, or liabilities are expressed or implied.
All products being returned for repair require a return material authorization(RMA) assigned by APD prior to return shipment.

American Power Design, Inc.

"The best high voltage design solution"

RoHS

C75 SERIES 75 WATT DC/DC CONVERTERS

FEATURES

- Customer Selects Output Voltage
- Outputs to 28 Vdc
- Wide Input Ranges
  (10-20Vdc, 18-36Vdc, 20-60Vdc, 36-72Vdc)
- Excellent Line & Load Regulation
- 500 Vdc Output Isolation
- Continuous Short Circuit Protection
- Thermal Shutdown *(Self-Resetting)*
- Available in Chassis Mount

The C75 Series of DC/DC converters offers a single output to 28Vdc and 500Vdc of isolation. They are available in either PC or Chassis mount configurations. Their rugged enclosure, low output ripple, and excellent regulation characteristics make them ideally suited for harsh environment applications that demand a high degree of performance. All models will tolerate a short circuit indefinitely.

ELECTRICAL SPECIFICATIONS

Voltage Accuracy	+/-1%
Line Regulation	+/- 0.1%
Load Regulation	+/- 0.1%
Output Ripple	< 100mV P-P
Output Trim	+/-10%
Input Filter	PI Network
Efficiency	87% (typ.)
Short Circuit Protection	Continuous
Switching Frequency	130 kHz
Output Isolation	500 Vdc
Input / Output Capacitance	< 1300pF

GENERAL SPECIFICATIONS

Temp. Stability	+/-0.02%/°C
Temp. (Operating , Case)	-40 to +85°C
Temp. (Storage)	-40 to +125°C
Logic Shutdown	Logic 0 (off)
EMI/RFI	Six Sided Shield
Derating	None
Cooling	Free-Air Convection or Forced Air
Thermal Shut Down	100°C/+/- 5°C *(Self-Resetting)*

PHYSICAL SPECIFICATIONS

Dimensions	2.75 x 4.8 x 0.92 inches
Weight	13.5 Oz
Case Material	Black Coated Metal *(With Non-Conductive Base Plate)*

C75 SERIES 75 WATT DC/DC CONVERTERS

REPRESENTATIVE MODEL LISTING

OUTPUT SPECIFICATIONS		MODEL NUMBER / INPUT RANGE							
		10-20VDC		18-36VDC		20-60VDC		36-72VDC	
VOLTAGE	CURRENT	Non-RoHs	RoHs	Non-RoHs	RoHs	Non-RoHs	RoHs	Non-RoHs	RoHs
5 Vdc	15 A	C75-5	C75-5/Y	C75-5/A	C75-5/A/Y	C75-5/B	C75-5/B/Y	C75-5/C	C75-5/C/Y
6 Vdc	12.5 A	C75-6	C75-6/Y	C75-6/A	C75-6/A/Y	C75-6/B	C75-6/B/Y	C75-6/C	C75-6/C/Y
9 Vdc	8.3 A	C75-9	C75-9/Y	C75-9/A	C75-9/A/Y	C75-9/B	C75-9/B/Y	C75-9/C	C75-9/C/Y
12 Vdc	6.2 A	C75-12	C75-12/Y	C75-12/A	C75-12/A/Y	C75-12/B	C75-12/B/Y	C75-12/C	C75-12/C/Y
15 Vdc	5 A	C75-15	C75-15/Y	C75-15/A	C75-15/A/Y	C75-15/B	C75-15/B/Y	C75-15/C	C75-15/C/Y
18 Vdc	4.2 A	C75-18	C75-18/Y	C75-18/A	C75-18/A/Y	C75-18/B	C75-18/B/Y	C75-18/C	C75-18/C/Y
21 Vdc	3.6 A	C75-21	C75-21/Y	C75-21/A	C75-21/A/Y	C75-21/B	C75-21/B/Y	C75-21/C	C75-21/C/Y
24 Vdc	3.1 A	C75-24	C75-24/Y	C75-24/A	C75-24/A/Y	C75-24/B	C75-24/B/Y	C75-24/C	C75-24/C/Y
28 Vdc	2.7 A	C75-28	C75-28/Y	C75-28/A	C75-28/A/Y	C75-28/B	C75-28/B/Y	C75-28/C	C75-28/C/Y

C75-12/A/Y

Product Family

Total Output Power

/Y RoHS Compliance

Alternate Input Range
/A 18Vdc - 36Vdc
/B 20Vdc - 60Vdc
/C 36Vdc - 72Vdc

Customer Selects Output Voltage

The C75 Series are designed such that the customer may order any output voltage from 5Vdc to 28Vdc at no additional charge.

C75 SERIES 75 WATT DC/DC CONVERTERS

STANDARD PC MOUNT

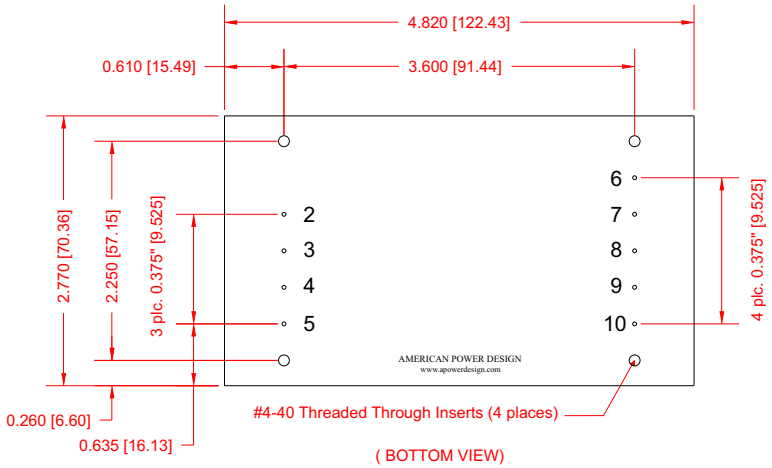

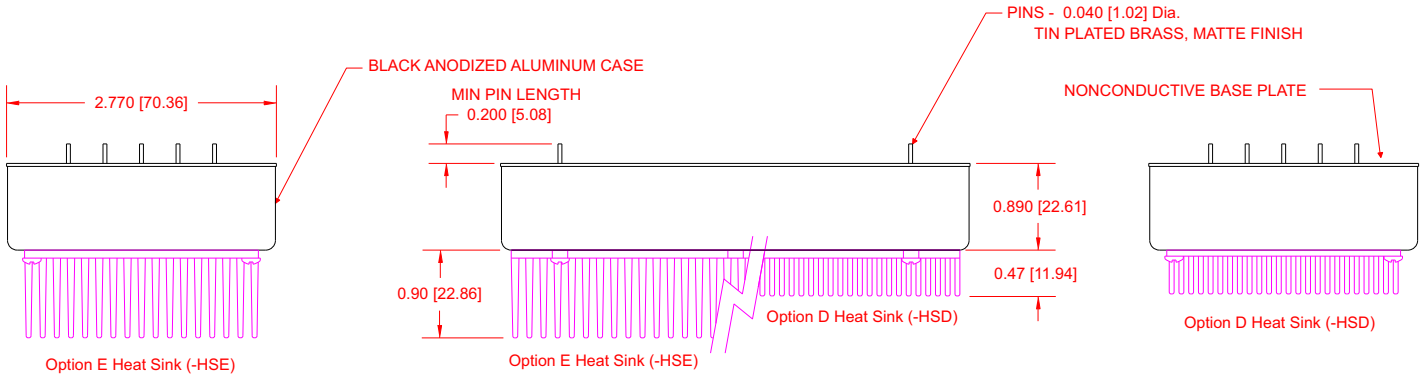

PIN #	FUNCTION	PIN #	FUNCTION
1	No Pin	6	-V Out
2	- Input	7	+ V Out
3	+ Input	8	- Sense
4	On / Off	9	Trim
5	Case	10	+ Sense

Dimensions are in Inches
[Metric equivalents in brackets]

C75 SERIES 75 WATT DC/DC CONVERTERS

-TS CHASSIS MOUNT OPTION

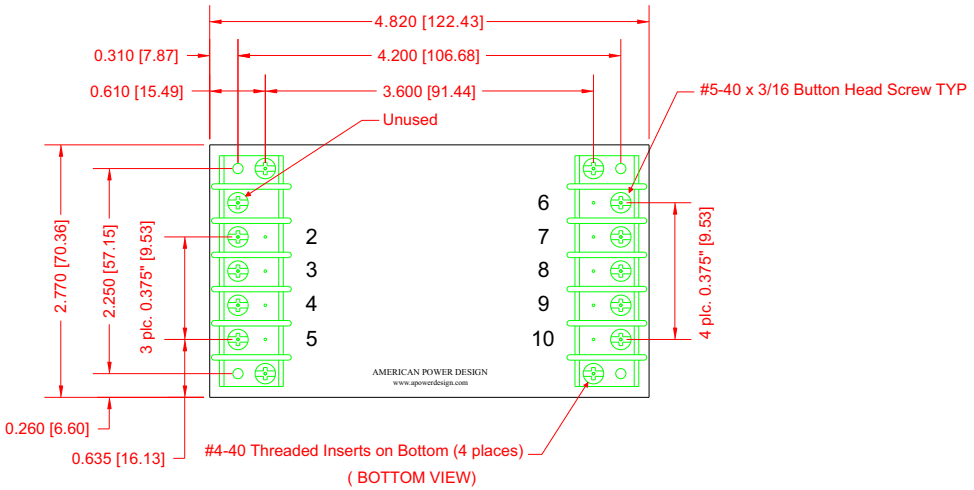

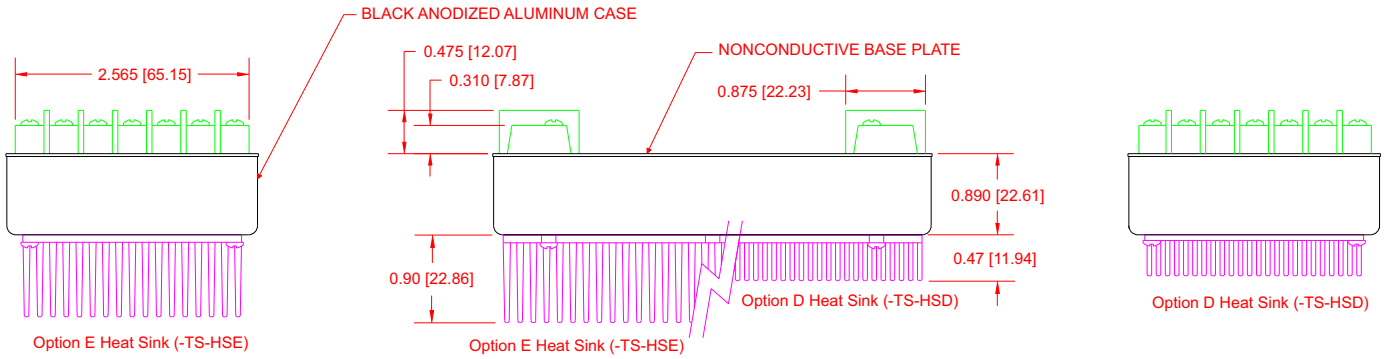

PIN #	FUNCTION	PIN #	FUNCTION
1	No Pin	6	-V Out
2	- Input	7	+ V Out
3	+ Input	8	- Sense
4	On / Off	9	Trim
5	Case	10	+ Sense

Dimensions are in Inches
[Metric equivalents in brackets]

C75 SERIES 75 WATT DC/DC CONVERTERS

APPLICATION NOTES

INPUT AND OUTPUT IMPEDANCE

The C75 Series of power converters have been designed to be stable with no external capacitors when used in low inductance input and output circuits. However, in some applications, the inductance associated with the distribution from the power source to the input of the converter can affect the stability of the converter. The addition of a 100 µF electrolytic capacitor with an ESR <1 Ohm across the input helps ensure stability of the converter. In many applications, the user has to use decoupling capacitance at the load.

SHORT CIRCUIT PROTECTION

The C75 Series is equipped with short circuit protection. The converter will fold-back the input power whenever a short circuit is applied to its output and automatically recover after the overload condition is removed.

ISOLATION

The output of the C75 Series is galvanically isolated from both the input and case, capacitance is < 1300pF and resistance is > 10G Ohm.
The figure below shows the internal RC network that connects the Case (Pin 5) to Input(-) (Pin 2). This aides in reducing unwanted noise.

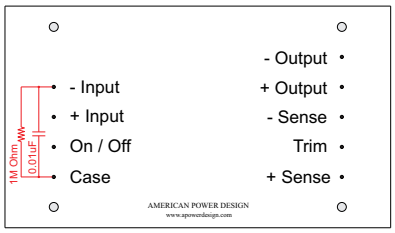

INRUSH CURRENT

The inrush current of the C75 Series has been kept as low as possible. However, a series resistor may be inserted in the input line to limit this current further.

REMOTE SENSING

The C75 Series is equipped with remote sensing, this feature compensates for voltage drops occurring between the output pins of the converter and the load.
The SENSE(-) (Pin 8) and SENSE(+) (Pin 10) should be connected at the load or at the point where regulation is required.

The feedback through the sensing pins allows the converter to output a higher voltage at the output pins to compensate for the voltage drop on the connections between the converters output and the load. It will compensate for up to 0.5V drop between the converter and the load.

Because the sense leads carry minimal current, large traces on the end-user board are not required. However, sense traces should be located close to a ground plane to minimize system noise and insure optimum performance. When wiring discretely, twisted pair wires should be used to connect the sense lines to the load to reduce susceptibility to noise.

The figure below shows the correct method of installation using this option.

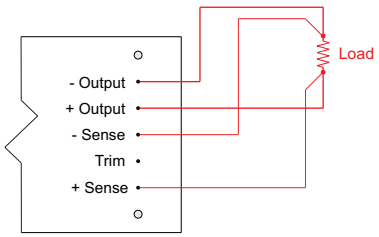

NOTE:
Always disconnect the sense wires before disconnecting the output wires when the unit is under power. otherwise, the supply may be permanently damaged

If remote sensing is not required, the SENSE(-) (Pin 8) must be connected to the Output(-) (Pin 6), and the SENSE(+) (Pin 10) must be connected to the Output(+) (Pin 7) to ensure the converter will regulate at the specified output voltage. If these connections are not made, the converter will deliver an output voltage that is slightly higher than the specified value.

C75 SERIES 75 WATT DC/DC CONVERTERS

APPLICATION NOTES

REMOTE ON/OFF CONTROL

The On/Off control (Pin 4) allows the user to shut down the converter mechanically or logically using a relay or a TTL or CMOS logic signal.

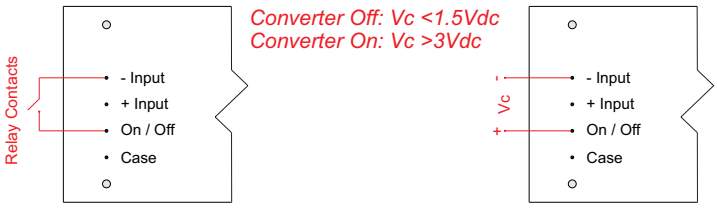

TRIM OUTPUT

The C75 Series is equipped with an output trim pin (Pin 9), this feature allows the user to adjust the output voltage up or down 10% using a fixed precision resistor or adjustable trim pot.

The figure below shows how to adjust the output voltage using a fixed precision resistor.

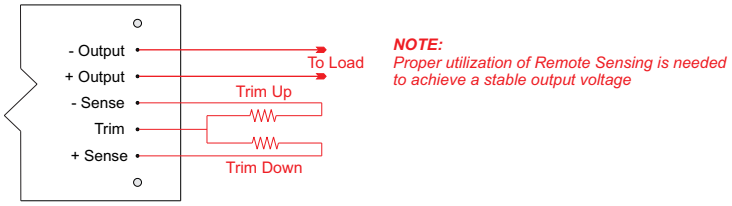

The figure below shows how to adjust the output voltage using an external Trim Pot.

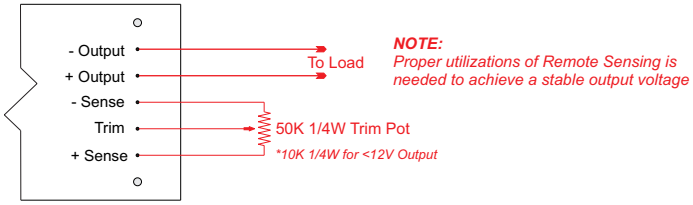

CONNECTION IN SERIES

Figure below shows how to connect multiple outputs in series with the use of shunt diodes, taking into consideration that the highest achieved output voltage should remain below the rated isolation voltage.

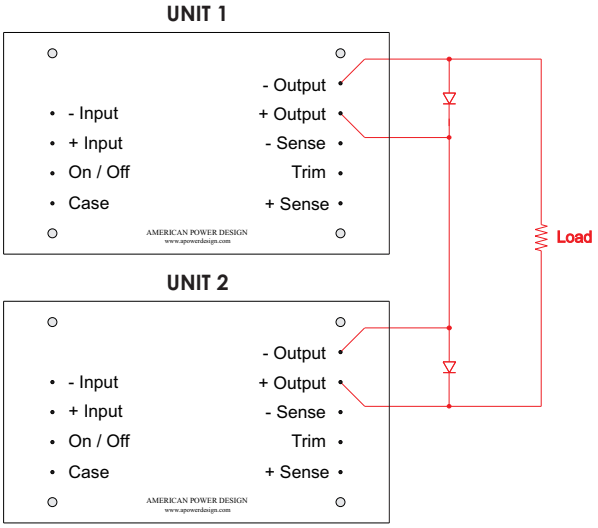

CONNECTION IN PARALLEL

The figure below show how to connect outputs of several units with equal nominal output voltage in parallel with the use of oring diodes.

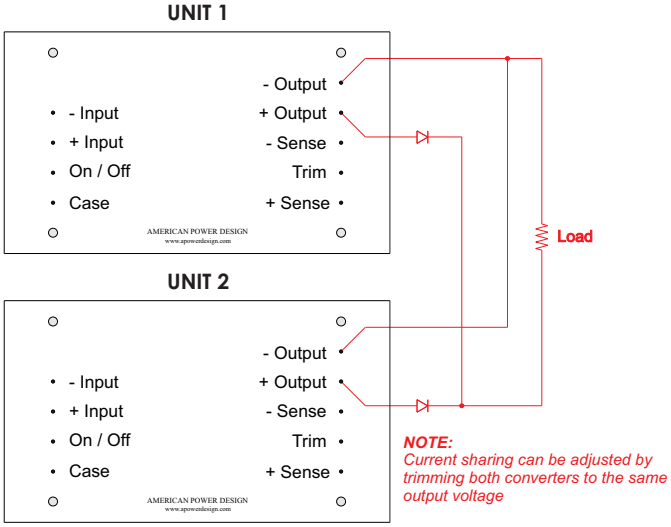

C75 SERIES 75 WATT DC/DC CONVERTERS

APPLICATION NOTES

LOAD TRANSIENT

Figure below shows a typical output voltage response, measured during a transition from full rated load current to no load current with no additional output filtering.

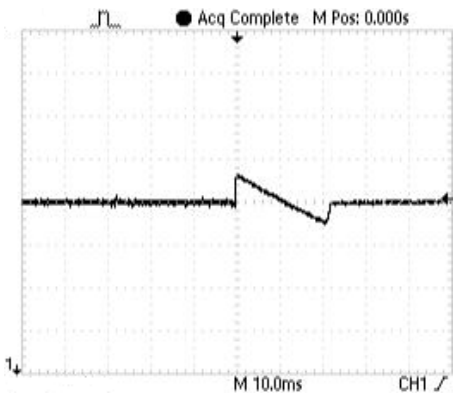

STARTUP TRANSIENT

Figure below shows a typical output voltage during turn-on, measured at no load current with no additional output filtering.

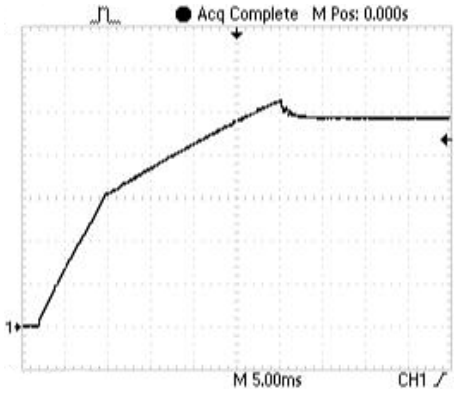

Figure below shows a typical output voltage response, measured during a transition from no load current to full rated load current with no additional output filtering.

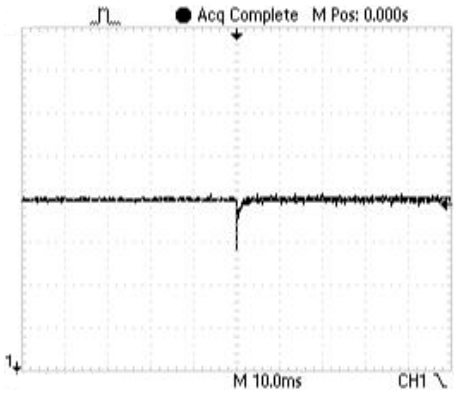

Figure below shows a typical output voltage during turn-on, measured at full rated load current with no additional output filtering.

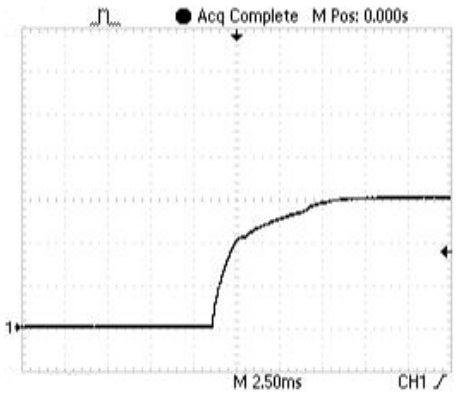

C75 SERIES 75 WATT DC/DC CONVERTERS

APPLICATION NOTES

RIPPLE AND NOISE

Figure below shows a typical output voltage ripple waveform, measured with 20MHz bandwidth filter at full rated load current with no additional output filtering. External low ESR capacitors may be added across output to further reduce ripple.

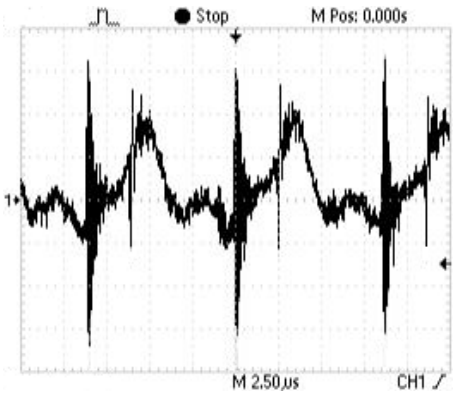

NUCLEAR AND MEDICAL APPLICATIONS

American Power Design products are not designed, intended for use in, or authorized for use as critical components in life support systems, equipment used in hazardous environments, or nuclear control systems without the express written consent of American Power Design, Inc.

CLEANING AGENTS

In order to avoid possible damage, any penetration of cleaning fluids must be prevented, since the power supplies are not hermetically sealed.

TECHNICAL REVISIONS

The appearance of products, including safety agency certifications pictured on labels, may change depending on the date manufactured. Specifications are subject to change without notice.

SAFETY REQUIREMENTS

The converters are designed to meet North American and International safety regulatory requirements per UL 60950-1/CSA 22.2 No. 60950-1-07 Second Edition, IEC 60950-1: 2005, and EN 60950-1:2006. Basic Insulation is provided between input and output. To comply with safety agencies requirements, an input line fuse must be used external to the converter. The table below provides the recommended fuse rating for use with this family of products.

Input Voltage Range	Fuse Rating
10-20Vdc	15A
18-36Vdc	8A
20-60Vdc	7A
36-72Vdc	4A

If one input fuse is used for a group of modules, the maximum fuse rating should not exceed 20A.

WARRANTY

All products manufactured by American Power Design, Inc. (APD) are warranted to be free of defects due to material or workmanship for a period of one year from date of shipment. At our option, APD will repair or replace any non-conforming product.
APD expressly disclaims any liability for consequential or incidental damages resulting from the use or misuse of its products by the purchaser or others.
This warranty is in lieu of all warranties expressed or implied, including the warranties of merchantability. No other warranties, obligations, or liabilities are expressed or implied.
All products being returned for repair require a return material authorization(RMA) assigned by APD prior to return shipment.

American Power Design, Inc.

"The best high voltage design solution"

RoHS

D60 SERIES 60 WATT DC/DC CONVERTERS

FEATURES

- Customer Selects Output Voltage
- Outputs to 28 Vdc
- Wide Input Ranges
  (10-20Vdc, 18-36Vdc, 20-60Vdc, 36-72Vdc)
- Excellent Line & Load Regulation
- Low Output Ripple
- 500 Vdc Output Isolation
- Continuous Short Circuit Protection
- Available in Chassis Mount
- Thermal Shutdown *(Self-Resetting)*

The D60 Series of DC/DC converters is available with single, dual, and triple outputs which are isolated from the input. They are enclosed in a six-sided metal case. Their low output ripple, and excellent regulation characteristics make them ideally suited for applications that demand a high degree of performance. All models will tolerate a short circuit indefinitely.

ELECTRICAL SPECIFICATIONS

Voltage Accuracy	+/-1%
Line Regulation	+/- 1%
Load Regulation	+/-1%
Outputs Ripple	< 100mV P-P
Outputs <10Vdc Ripple	< 75mV P-P
Output Trim (Single & Dual Models Only)	+/-10%
Input Filter	PI Network
Efficiency	83% (typ.)
Short Circuit Protection	Continuous
Switching Frequency	130 kHz
Output Isolation	500 Vdc
Input / Output Capacitance	< 1300pF

GENERAL SPECIFICATIONS

Temp. Stability	+/-0.02%/°C
Temp. (Operating , Case)	-40 to +85°C
Temp. (Storage)	-40 to +125°C
EMI/RFI	Six Sided Shield
Derating	None
Cooling	Free-Air Convection or Forced Air
Thermal Shut Down	100°C +/- 5°C *(Self-Resetting)*

PHYSICAL SPECIFICATIONS

Dimensions	3.5 x 5.5 x 0.92 inches
Weight	19.5 Oz
Case Material	Black Coated Metal *(With Non-Conductive Base Plate)*

D60 SERIES 60 WATT DC/DC CONVERTERS

REPRESENTATIVE MODEL LISTING

OUTPUT SPECIFICATIONS			MODEL NUMBER / INPUT RANGE							
			10-20VDC		18-36VDC		20-60VDC		36-72VDC	
ID	VOLTAGE	CURRENT	Non-RoHs	RoHs	Non-RoHs	RoHs	Non-RoHs	RoHs	Non-RoHs	RoHs
V1	5 Vdc	12 A	D60-5	D60-5/Y	D60-5/A	D60-5/A/Y	D60-5/B	D60-5/B/Y	D60-5/C	D60-5/C/Y
V1	5 Vdc	6 A	D60-5/5	D60-5/5/Y	D60-5/5/A	D60-5/5/A/Y	D60-5/5/B	D60-5/5/B/Y	D60-5/5/C	D60-5/5/C/Y
V2	5 Vdc	6A								
V1	12 Vdc	5 A	D60-12	D60-12/Y	D60-12/A	D60-12/A/Y	D60-12/B	D60-12/B/Y	D60-12/C	D60-12/C/Y
V1	12Vdc	2.5 A	D60-12/12	D60-12/12/Y	D60-12/12/A	D60-12/12/A/Y	D60-12/12/B	D60-12/12/B/Y	D60-12/12/C	D60-12/12/C/Y
V2	12 Vdc	2.5 A								
V1	15 Vdc	4 A	D60-15	D60-15/Y	D60-15/A	D60-15/A/Y	D60-15/B	D60-15/B/Y	D60-15/C	D60-15/C/Y
V1	15 Vdc	2 A	D60-15/15	D60-15/15/Y	D60-15/15/A	D60-15/15/A/Y	D60-15/15/B	D60-15/15/B/Y	D60-15/15/C	D60-15/15/C/Y
V2	15 Vdc	2 A								
V1	12 Vdc	2.5 A	D60-12/5	D60-12/5/Y	D60-12/5/A	D60-12/5/A/Y	D60-12/5/B	D60-12/5/B/Y	D60-12/5/C	D60-12/5/C/Y
V2	5 Vdc	6 A								
V1	15 Vdc	2 A	D60-15/5	D60-15/5/Y	D60-15/5/A	D60-15/5/A/Y	D60-15/5/B	D60-15/5/B/Y	D60-15/5/C	D60-15/5/C/Y
V2	5 Vdc	6 A								
V1	24 Vdc	2.5 A	D60-24	D60-24/Y	D60-24/A	D60-24/A/Y	D60-24/B	D60-24/B/Y	D60-24/C	D60-24/C/Y
V1	5 Vdc	6 A	D60-5/12/12	D60-5/12/12/Y	D60-5/12/12/A	D60-5/12/12/A/Y	D60-5/12/12/B	D60-5/12/12/B/Y	D60-5/12/12/C	D60-5/12/12/C/Y
V2	-12 Vdc	1.25 A								
V3	+12 Vdc	1.25 A								
V1	5 Vdc	6 A	D60-5/15/15	D60-5/15/15/Y	D60-5/15/15/A	D60-5/15/15/A/Y	D60-5/15/15/B	D60-5/15/15/B/Y	D60-5/15/15/C	D60-5/15/15/C/Y
V2	-15 Vdc	1 A								
V3	+15 Vdc	1 A								

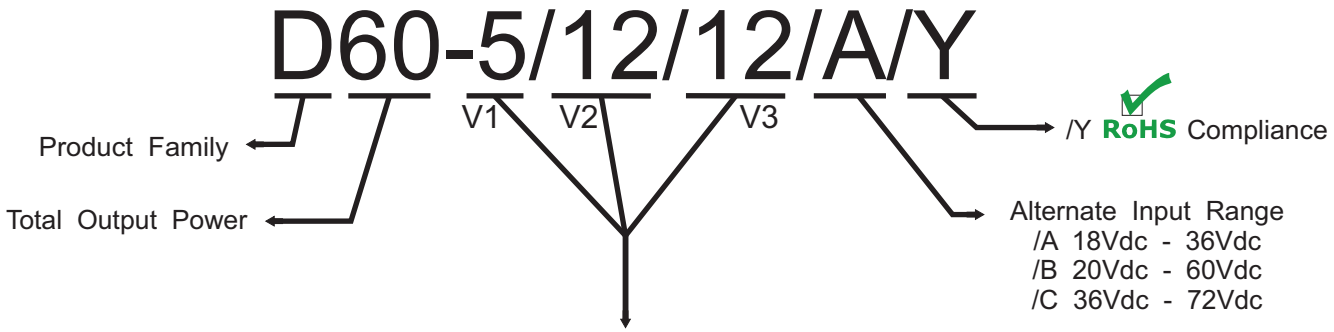

Customer Selects Output Voltage

The D60 Series are designed such that the customer may order any output voltage combination from 3.3Vdc to 28Vdc at no additional charge.

D60 SERIES 60 WATT DC/DC CONVERTERS

STANDARD PC MOUNT

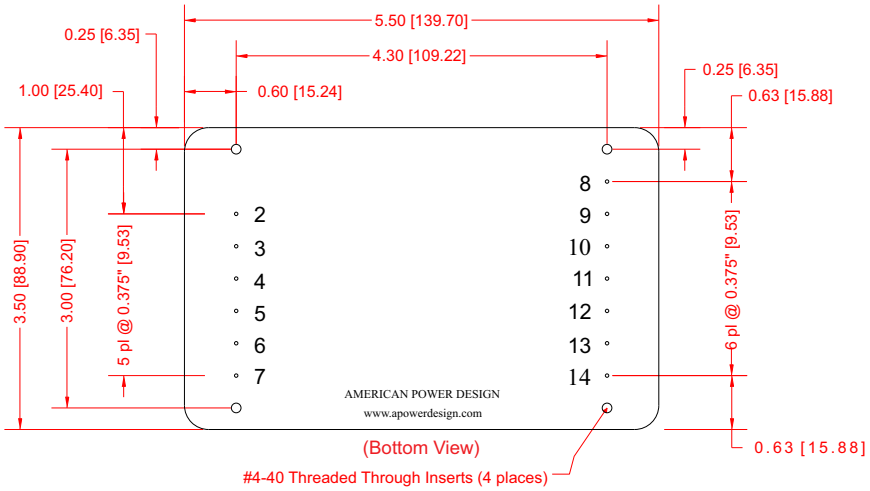

Dimensions are in Inches
[Metric equivalents in brackets]

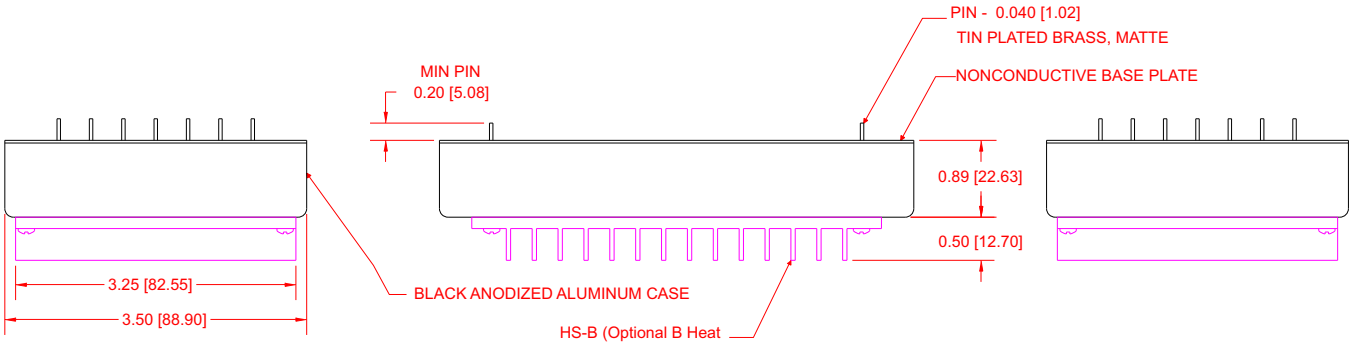

PIN #	FUNCTION			PIN #	FUNCTION		
	Single	Dual	Triple		Single	Dual	Triple
1	No Pin	No Pin	No Pin	8	-V1 Out	-V1 Sense	-V1 Sense
2	- Input	- Input	- Input	9	- V1 Out	-V1 Out	-V1 Out
3	- Input	- Input	- Input	10	+V1 Out	+V1 Out	+V1 Out
4	+ Input	+ Input	+ Input	11	+V1 Out	+V1 Sense	+V1 Sense
5	+ Input	+ Input	+ Input	12	-V1 Sense	-V2 Out	-V2 Out
6	On / Off	On / Off	On / Off	13	V1 Trim	V2 Trim	Com 2 & 3
7	Case	Case	Case	14	+V1 Sense	+V2 Out	+V3 Out

D60 SERIES 60 WATT DC/DC CONVERTERS

-TS CHASSIS MOUNT OPTION

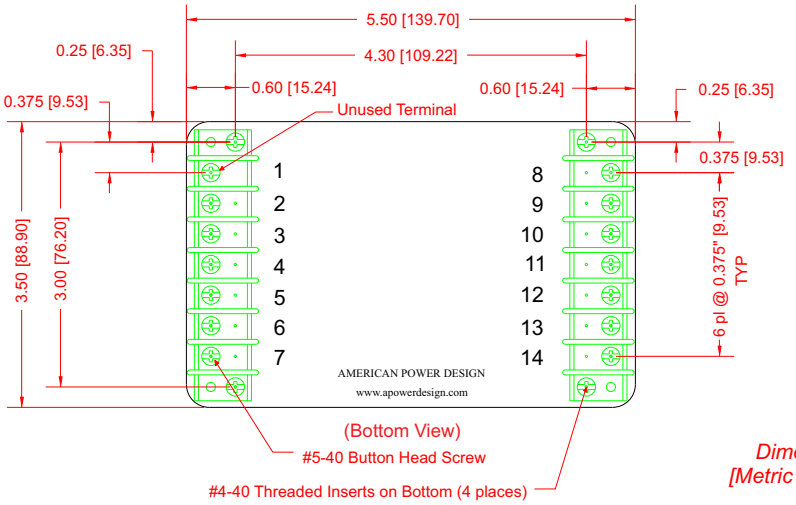

Dimensions are in Inches
[Metric equivalents in brackets]

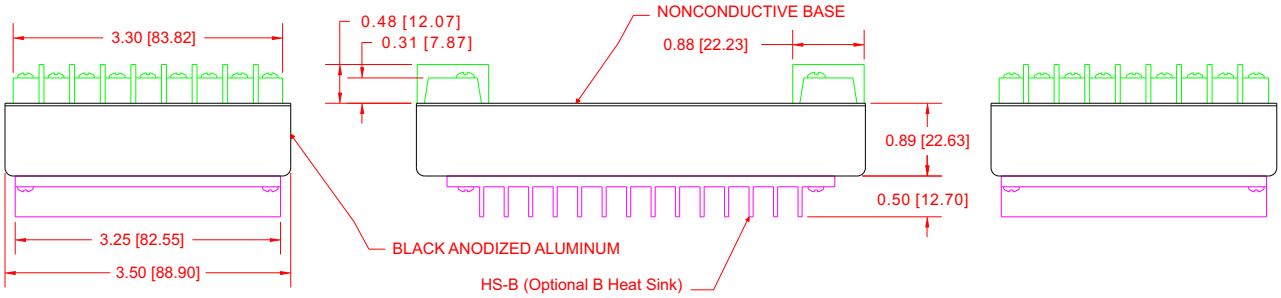

PIN #	FUNCTION			PIN #	FUNCTION		
	Single	Dual	Triple		Single	Dual	Triple
1	N/C	N/C	N/C	8	-V1 Out	-V1 Sense	-V1 Sense
2	- Input	- Input	- Input	9	- V1 Out	-V1 Out	-V1 Out
3	- Input	- Input	- Input	10	+V1 Out	+V1 Out	+V1 Out
4	+ Input	+ Input	+ Input	11	+V1 Out	+V1 Sense	+V1 Sense
5	+ Input	+ Input	+ Input	12	-V1 Sense	-V2 Out	-V2 Out
6	On / Off	On / Off	On / Off	13	V1 Trim	V2 Trim	Com 2 & 3
7	Case	Case	Case	14	+V1 Sense	+V2 Out	+V3 Out

D60 SERIES 60 WATT DC/DC CONVERTERS

APPLICATION NOTES

INPUT AND OUTPUT IMPEDANCE

The D60 Series of power converters have been designed to be stable with no external capacitors when used in low inductance input and output circuits. However, in some applications, the inductance associated with the distribution from the power source to the input of the converter can affect the stability of the converter. The addition of a 100 µF electrolytic capacitor with an ESR <1 Ohm across the input helps ensure stability of the converter. In many applications, the user has to use decoupling capacitance at the load.

SHORT CIRCUIT PROTECTION

The D60 Series is equipped with short circuit protection. The converter will fold-back the input power whenever a short circuit is applied to its output and automatically recover after the overload condition is removed.

REMOTE SENSING

The D60 Series is equipped with remote sensing, this feature compensates for voltage drops occurring between the output pins of the converter and the load.
The SENSE(-) and SENSE(+) pins should be connected at the load or at the point where regulation is required.

The feedback through the sensing pins allows the converter to output a higher voltage at the output pins to compensate for the voltage drop on the connections between the converters output and the load. It will compensate for up to 0.5V drop between the converter and the load.

Because the sense leads carry minimal current, large traces on the end-user board are not required. However, sense traces should be located close to a ground plane to minimize system noise and insure optimum performance. When wiring discretely, twisted pair wires should be used to connect the sense lines to the load to reduce susceptibility to noise.

The figures below show the correct method of installation using this option.

SINGLE OUTPUT

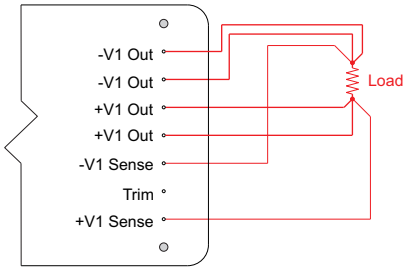

NOTE:
In the case of Single output models all 4 output pins should be used to achieve the highest efficience and reliability.

DUAL OUTPUT

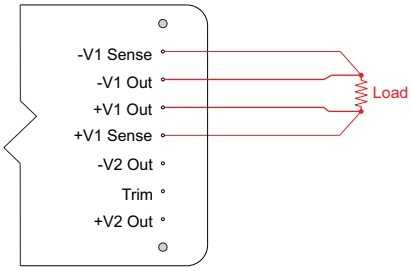

NOTE:
Always disconnect the sense wires before disconnecting the output wires when the unit is under power. otherwise, the supply may be permanently damaged.

TRIPLE OUTPUT

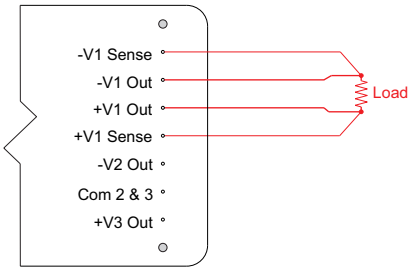

If remote sensing is not required, the SENSE(-) pin must be connected to the Output(-) pin and the SENSE(+) pin must be connected to the Output(+) pin to ensure the converter will regulate at the specified output voltage. If these connections are not made, the converter will deliver an output voltage that is slightly higher than the specified value.

D60 SERIES 60 WATT DC/DC CONVERTERS

APPLICATION NOTES

ISOLATION

The output of the D60 Series is galvanically isolated from both the input and case, capacitance is < 1300pF and resistance is > 10G Ohm.
The figure below shows the internal RC network that connects the Case (Pin 7) to Input(-) (Pins 2&3). This aides in reducing unwanted noise.

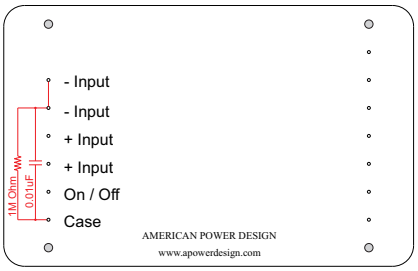

REMOTE ON/OFF CONTROL

The On/Off control (Pin 6) allows the user to shut down the converter mechanically or logically using a relay or a TTL or CMOS logic signal.

Converter Off: Vc <1.5Vdc
Converter On: Vc >3Vdc

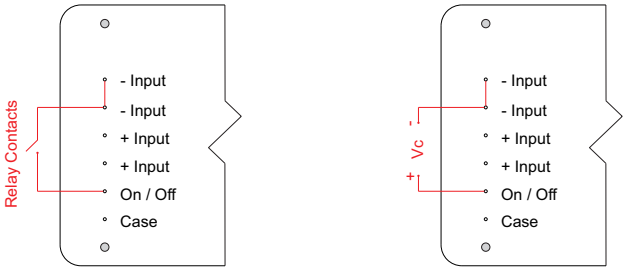

INRUSH CURRENT

The inrush current of the D60 Series has been kept as low as possible. However, a series resistor may be inserted in the input line to limit this current further.

THERMAL PROTECTION

The D60 Series is equipped with a self-resetting thermal protection circuit. The converter will shut down if the internal temperature exceeds 100°C +/- 5°C output and automatically recover once the temperature drops below 80°C +/- 5°C.

CONNECTION IN SERIES

Figure below shows how to connect multiple outputs in series with the use of shunt diodes, taking into consideration that the highest achieved output voltage should remain below the rated isolation voltage.

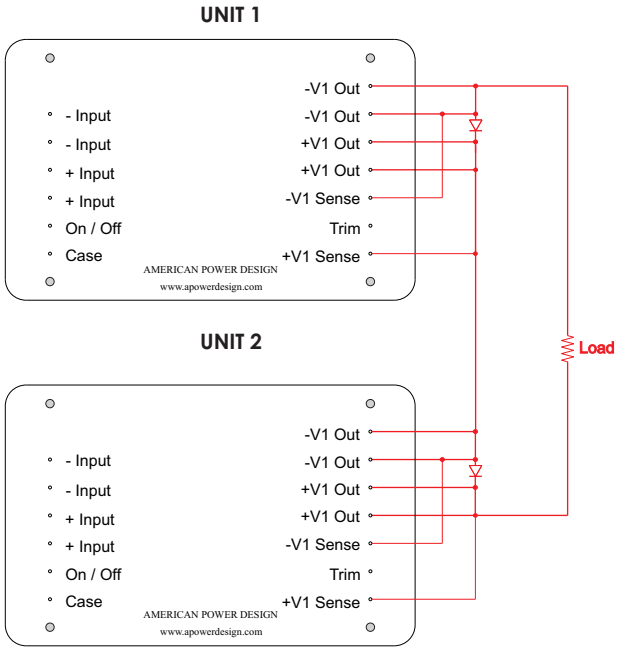

NOTE:
Series connection is recommended for single output models only.

D60 SERIES 60 WATT DC/DC CONVERTERS

APPLICATION NOTES

CONNECTION IN PARALLEL

The figure below shows how to connect outputs of several units with equal nominal output voltage in parallel with the use of oring diodes.

NOTE:
Parallel Operation is recommended for single output models only.

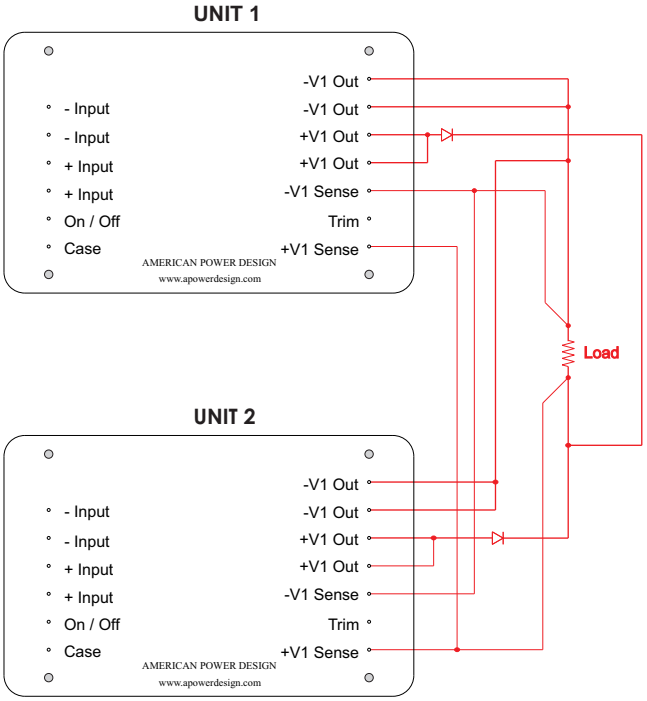

NOTE:
Current sharing can be adjusted by trimming both converters to the same output voltage

TRIM OUTPUT

The D60 Series Single & Dual models are equipped with an output trim (Pin 13), this feature allows the user to adjust the output voltage up or down 10% using a fixed precision resistor or adjustable trim pot.

The figures below show how to adjust the output voltage using a fixed precision resistor.

SINGLE OUTPUT

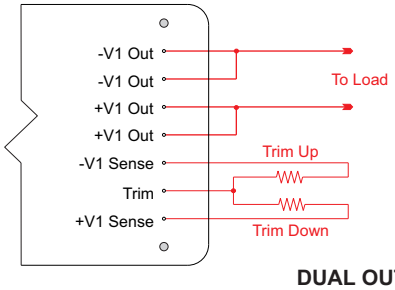

NOTE:
Proper utilization of Remote Sensing is needed to achieve a stable output voltage

DUAL OUTPUT

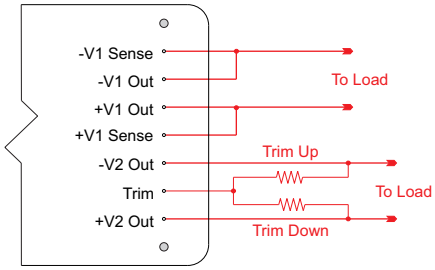

The figures below show how to adjust the output voltage using an external Trim Pot.

SINGLE OUTPUT

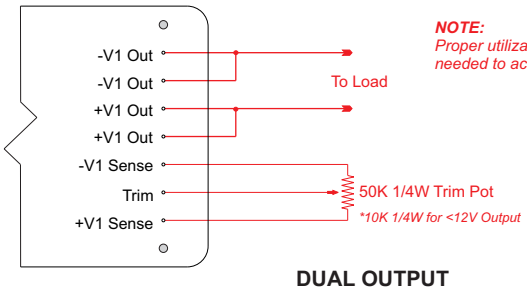

NOTE:
Proper utilizations of Remote Sensing is needed to achieve a stable output voltage

DUAL OUTPUT

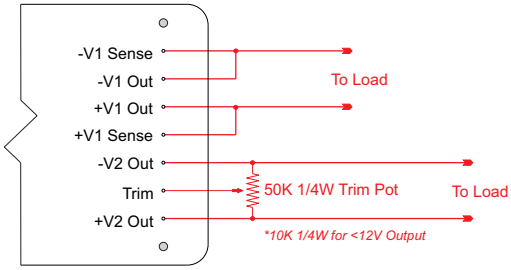

D60 SERIES 60 WATT DC/DC CONVERTERS

APPLICATION NOTES

LOAD TRANSIENT

Figure below shows a typical output voltage response, measured during a transition from full rated load current to no load current with no additional output filtering.

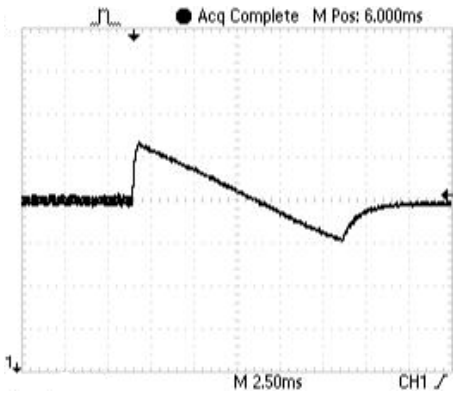

STARTUP TRANSIENT

Figure below shows a typical output voltage during turn-on, measured at no load current with no additional output filtering.

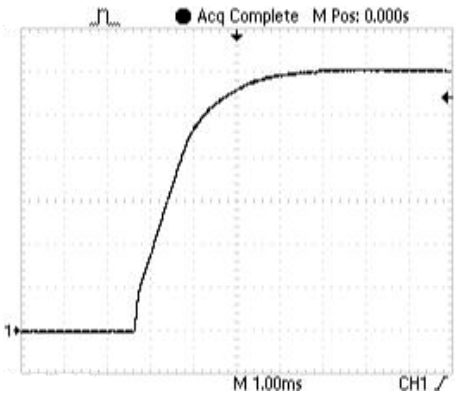

Figure below shows a typical output voltage response, measured during a transition from no load current to full rated load current with no additional output filtering.

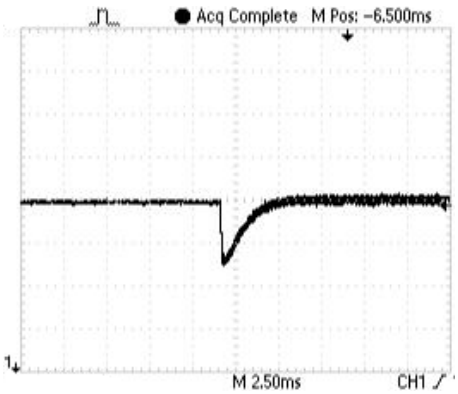

Figure below shows a typical output voltage during turn-on, measured at full rated load current with no additional output filtering.

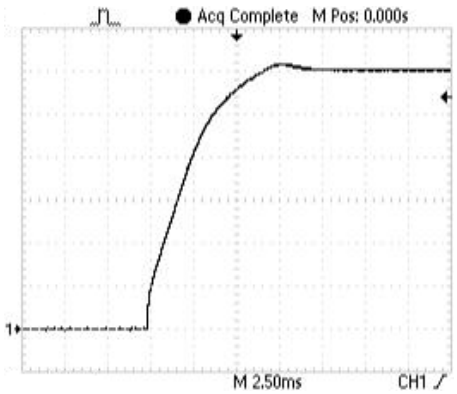

D60 SERIES 60 WATT DC/DC CONVERTERS

APPLICATION NOTES

RIPPLE AND NOISE

Figure below shows a typical output voltage ripple waveform, measured with 20MHz bandwidth filter at full rated load current with no additional output filtering. External low ESR capacitors may be added across output to further reduce ripple.

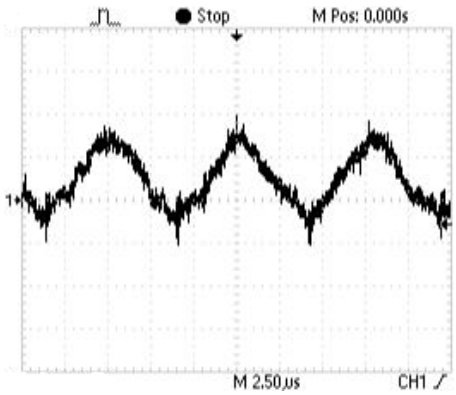

NUCLEAR AND MEDICAL APPLICATIONS

American Power Design products are not designed, intended for use in, or authorized for use as critical components in life support systems, equipment used in hazardous environments, or nuclear control systems without the express written consent of American Power Design, Inc.

CLEANING AGENTS

In order to avoid possible damage, any penetration of cleaning fluids must be prevented, since the power supplies are not hermetically sealed.

TECHNICAL REVISIONS

The appearance of products, including safety agency certifications pictured on labels, may change depending on the date manufactured. Specifications are subject to change without notice.

SAFETY REQUIREMENTS

The converters are designed to meet North American and International safety regulatory requirements per UL 60950-1/CSA 22.2 No. 60950-1-07 Second Edition, IEC 60950-1: 2005, and EN 60950-1:2006. Basic Insulation is provided between input and output. To comply with safety agencies requirements, an input line fuse must be used external to the converter. The table below provides the recommended fuse rating for use with this family of products.

Input Voltage Range	Fuse Rating
10-20Vdc	10A
18-36Vdc	6A
20-60Vdc	5A
36-72Vdc	3A

If one input fuse is used for a group of modules, the maximum fuse rating should not exceed 20A.

WARRANTY

All products manufactured by American Power Design, Inc. (APD) are warranted to be free of defects due to material or workmanship for a period of one year from date of shipment. At our option, APD will repair or replace any non-conforming product.
APD expressly disclaims any liability for consequential or incidental damages resulting from the use or misuse of its products by the purchaser or others.
This warranty is in lieu of all warranties expressed or implied, including the warranties of merchantability. No other warranties, obligations, or liabilities are expressed or implied.
All products being returned for repair require a return material authorization(RMA) assigned by APD prior to return shipment.

American Power Design, Inc.

"The best high voltage design solution"

RoHS

D100 SERIES 100 WATT DC/DC CONVERTERS

FEATURES

- Customer Selects Output Voltage
- Outputs to 28 Vdc
- Wide Input Ranges
  (10-20Vdc, 18-36Vdc, 20-60Vdc, 36-72Vdc)
- Excellent Line & Load Regulation
- Low Output Ripple
- 500 Vdc Output Isolation
- Continuous Short Circuit Protection
- Available in Chassis Mount
- Thermal Shutdown *(Self-Resetting)*

The D100 Series of DC/DC converters is available with single, dual, and triple outputs which are isolated from the input. They are enclosed in a six-sided metal case. Their low output ripple, and excellent regulation characteristics make them ideally suited for applications that demand a high degree of performance. All models will tolerate a short circuit indefinitely.

ELECTRICAL SPECIFICATIONS

Voltage Accuracy	+/-1%
Line Regulation	+/- 0.2%
Load Regulation	+/-1%
Outputs Ripple	< 100mV P-P
Outputs <10Vdc Ripple	< 75mV P-P
Output Trim (Single & Dual Models Only)	+/-10%
Input Filter	PI Network
Efficiency	85% (typ.)
Short Circuit Protection	Continuous
Switching Frequency	130 kHz
Output Isolation	500 Vdc
Input / Output Capacitance	< 1300pF

GENERAL SPECIFICATIONS

Temp. Stability	+/-0.02%/°C
Temp. (Operating , Case)	-40 to +85°C
Temp. (Storage)	-40 to +125°C
EMI/RFI	Six Sided Shield
Derating	None
Cooling	Free-Air Convection or Forced Air
Thermal Shut Down	100°C +/- 5°C *(Self-Resetting)*

PHYSICAL SPECIFICATIONS

Dimensions	3.5 x 5.5 x 0.92 inches
Weight	19.5 Oz
Case Material	Black Coated Metal *(With Non-Conductive Base Plate)*

D100 SERIES 100 WATT DC/DC CONVERTERS

REPRESENTATIVE MODEL LISTING

OUTPUT SPECIFICATION			MODEL NUMBER / INPUT RANGE							
			10-20VDC		18-36VDC		20-60VDC		36-72VDC	
ID	VOLTAGE	CURRENT	Non-RoHs	RoHs	Non-RoHs	RoHs	Non-RoHs	RoHs	Non-RoHs	RoHs
V1	5 Vdc	20 A	D100-5	D100-5/Y	D100-5/A	D100-5/A/Y	D100-5/B	D100-5/B/Y	D100-5/C	D100-5/C/Y
V1	5 Vdc	10 A	D100-5/5	D100-5/5/Y	D100-5/5/A	D100-5/5/A/Y	D100-5/5/B	D100-5/5/B/Y	D100-5/5/C	D100-5/5/C/Y
V2	5 Vdc	10A								
V1	12 Vdc	8.3 A	D100-12	D100-12/Y	D100-12/A	D100-12/A/Y	D100-12/B	D100-12/B/Y	D100-12/C	D100-12/C/Y
V1	12Vdc	4.1 A	D100-12/12	D100-12/12/Y	D100-12/12/A	D100-12/12/A/Y	D100-12/12/B	D100-12/12/B/Y	D100-12/12/C	D100-12/12/C/Y
V2	12 Vdc	4.1 A								
V1	15 Vdc	6.6 A	D100-15	D100-15/Y	D100-15/A	D100-15/A/Y	D100-15/B	D100-15/B/Y	D100-15/C	D100-15/C/Y
V1	15 Vdc	3.3 A	D100-15/15	D100-15/15/Y	D100-15/15/A	D100-15/15/A/Y	D100-15/15/B	D100-15/15/B/Y	D100-15/15/C	D100-15/15/C/Y
V2	15 Vdc	3.3 A								
V1	12 Vdc	4.1 A	D100-12/5	D100-12/5/Y	D100-12/5/A	D100-12/5/A/Y	D100-12/5/B	D100-12/5/B/Y	D100-12/5/C	D100-12/5/C/Y
V2	5 Vdc	10 A								
V1	15 Vdc	3.3 A	D100-15/5	D100-15/5/Y	D100-15/5/A	D100-15/5/A/Y	D100-15/5/B	D100-15/5/B/Y	D100-15/5/C	D100-15/5/C/Y
V2	5 Vdc	10 A								
V1	24 Vdc	4.1 A	D100-24	D100-24/Y	D100-24/A	D100-24/A/Y	D100-24/B	D100-24/B/Y	D100-24/C	D100-24/C/Y
V1	5 Vdc	10 A	D100-5/12/12	D100-5/12/12/Y	D100-5/12/12/A	D100-5/12/12/A/Y	D100-5/12/12/B	D100-5/12/12/B/Y	D100-5/12/12/C	D100-5/12/12/C/Y
V2	-12 Vdc	2 A								
V3	+12 Vdc	2 A								
V1	5 Vdc	10 A	D100-5/15/15	D100-5/15/15/Y	D100-5/15/15/A	D100-5/15/15/A/Y	D100-5/15/15/B	D100-5/15/15/B/Y	D100-5/15/15/C	D100-5/15/15/C/Y
V2	-15 Vdc	1.6 A								
V3	+15 Vdc	1.6 A								

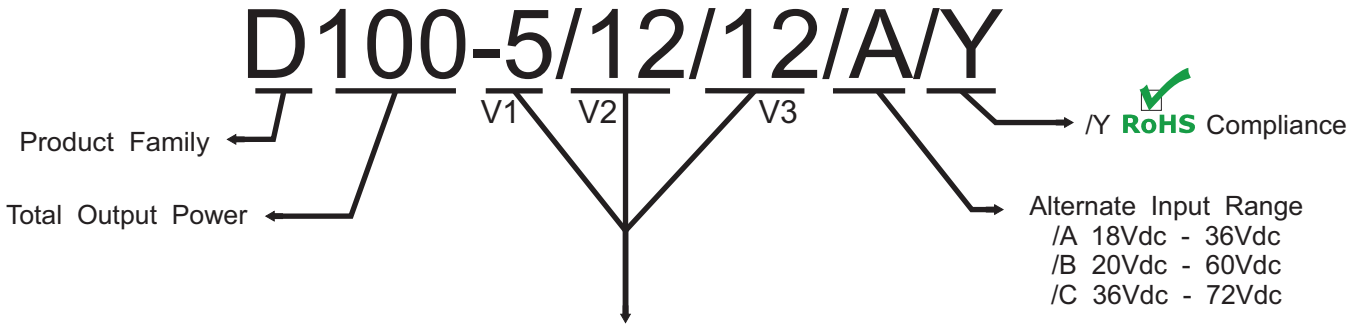

Customer Selects Output Voltage

The D100 Series are designed such that the customer may order any output voltage combination from 5Vdc to 28Vdc at no additional charge.

D100 SERIES 100 WATT DC/DC CONVERTERS

STANDARD PC MOUNT

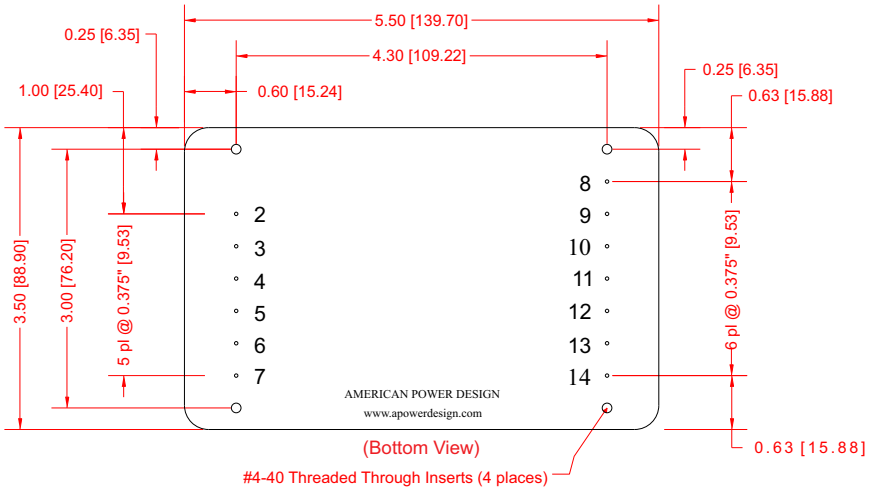

Dimensions are in Inches
[Metric equivalents in brackets]

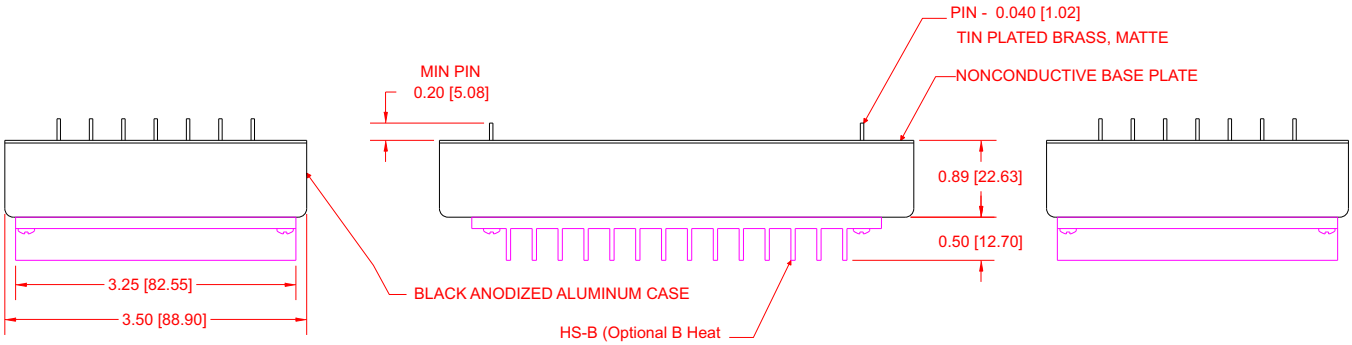

PIN #	FUNCTION			PIN #	FUNCTION		
	Single	Dual	Triple		Single	Dual	Triple
1	No Pin	No Pin	No Pin	8	-V1 Out	-V1 Sense	-V1 Sense
2	- Input	- Input	- Input	9	- V1 Out	-V1 Out	-V1 Out
3	- Input	- Input	- Input	10	+V1 Out	+V1 Out	+V1 Out
4	+ Input	+ Input	+ Input	11	+V1 Out	+V1 Sense	+V1 Sense
5	+ Input	+ Input	+ Input	12	-V1 Sense	-V2 Out	-V2 Out
6	On / Off	On / Off	On / Off	13	V1 Trim	V2 Trim	Com 2 & 3
7	Case	Case	Case	14	+V1 Sense	+V2 Out	+V3 Out

D100 SERIES 100 WATT DC/DC CONVERTERS

-TS CHASSIS MOUNT OPTION

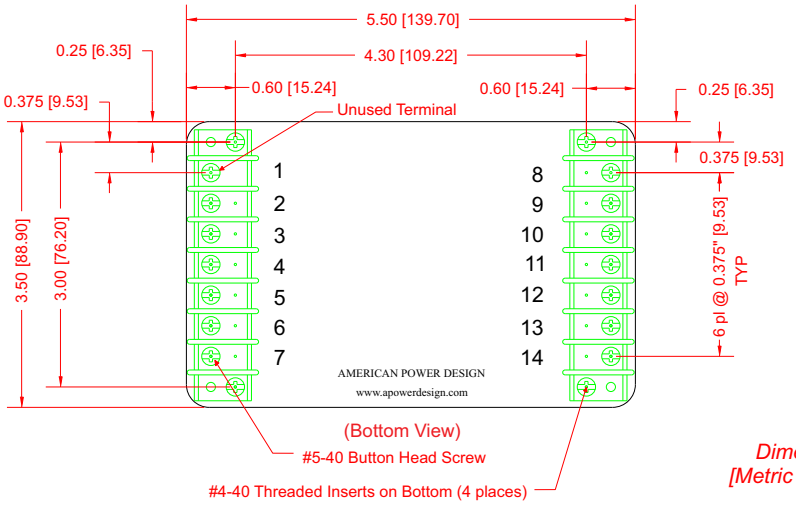

Dimensions are in Inches
[Metric equivalents in brackets]

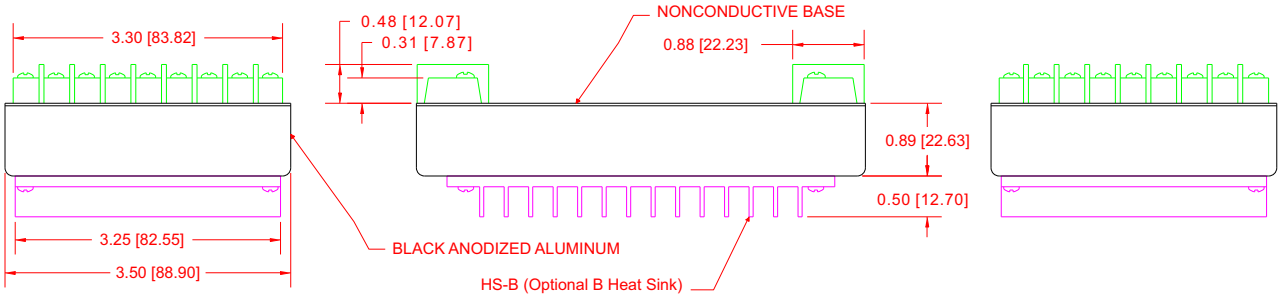

PIN #	FUNCTION			PIN #	FUNCTION		
	Single	Dual	Triple		Single	Dual	Triple
1	N/C	N/C	N/C	8	-V1 Out	-V1 Sense	-V1 Sense
2	- Input	- Input	- Input	9	- V1 Out	-V1 Out	-V1 Out
3	- Input	- Input	- Input	10	+V1 Out	+V1 Out	+V1 Out
4	+ Input	+ Input	+ Input	11	+V1 Out	+V1 Sense	+V1 Sense
5	+ Input	+ Input	+ Input	12	-V1 Sense	-V2 Out	-V2 Out
6	On / Off	On / Off	On / Off	13	V1 Trim	V2 Trim	Com 2 & 3
7	Case	Case	Case	14	+V1 Sense	+V2 Out	+V3 Out

D100 SERIES 100 WATT DC/DC CONVERTERS

APPLICATION NOTES

INPUT AND OUTPUT IMPEDANCE

The D100 Series of power converters have been designed to be stable with no external capacitors when used in low inductance input and output circuits. However, in some applications, the inductance associated with the distribution from the power source to the input of the converter can affect the stability of the converter. The addition of a 100 µF electrolytic capacitor with an ESR <1 Ohm across the input helps ensure stability of the converter. In many applications, the user has to use decoupling capacitance at the load.

SHORT CIRCUIT PROTECTION

The D100 Series is equipped with short circuit protection. The converter will fold-back the input power whenever a short circuit is applied to its output and automatically recover after the overload condition is removed.

REMOTE SENSING

The D100 Series is equipped with remote sensing, this feature compensates for voltage drops occurring between the output pins of the converter and the load.
The SENSE(-) and SENSE(+) pins should be connected at the load or at the point where regulation is required.

The feedback through the sensing pins allows the converter to output a higher voltage at the output pins to compensate for the voltage drop on the connections between the converters output and the load. It will compensate for up to 0.5V drop between the converter and the load.

Because the sense leads carry minimal current, large traces on the end-user board are not required. However, sense traces should be located close to a ground plane to minimize system noise and insure optimum performance. When wiring discretely, twisted pair wires should be used to connect the sense lines to the load to reduce susceptibility to noise.

The figures below show the correct method of installation using this option.

SINGLE OUTPUT

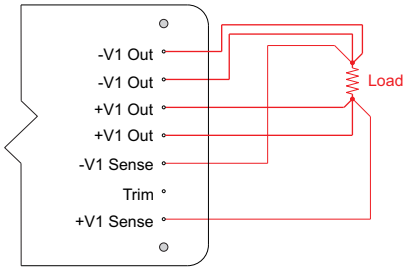

NOTE:
In the case of Single output models all 4 output pins should be used to achieve the highest efficience and reliability.

DUAL OUTPUT

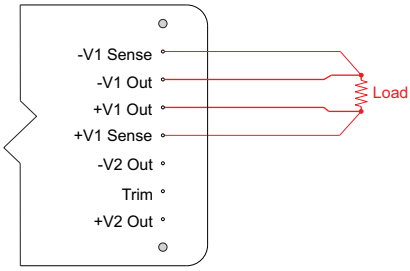

NOTE:
Always disconnect the sense wires before disconnecting the output wires when the unit is under power. otherwise, the supply may be permanently damaged.

TRIPLE OUTPUT

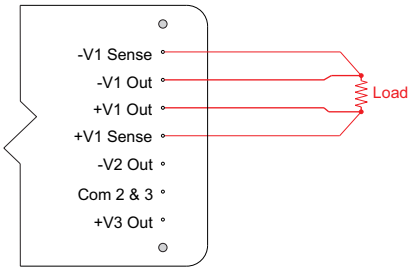

If remote sensing is not required, the SENSE(-) pin must be connected to the Output(-) pin and the SENSE(+) pin must be connected to the Output(+) pin to ensure the converter will regulate at the specified output voltage. If these connections are not made, the converter will deliver an output voltage that is slightly higher than the specified value.

D100 SERIES 100 WATT DC/DC CONVERTERS

APPLICATION NOTES

ISOLATION

The output of the D100 Series is galvanically isolated from both the input and case, capacitance is < 1300pF and resistance is > 10G Ohm.
The figure below shows the internal RC network that connects the Case (Pin 7) to Input(-) (Pins 2&3). This aides in reducing unwanted noise.

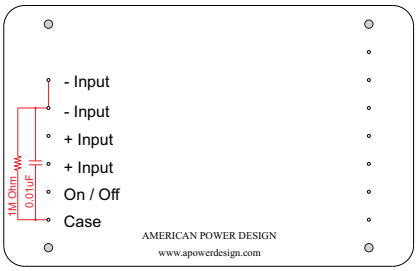

REMOTE ON/OFF CONTROL

The On/Off control (Pin 6) allows the user to shut down the converter mechanically or logically using a relay or a TTL or CMOS logic signal.

Converter Off: Vc <1.5Vdc
Converter On: Vc >3Vdc

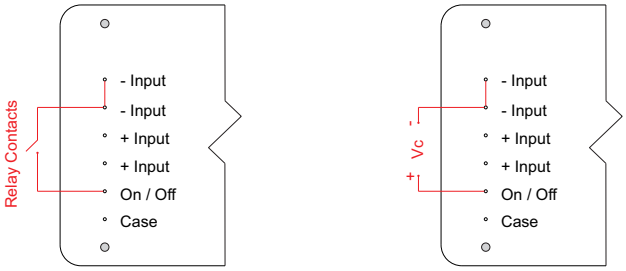

INRUSH CURRENT

The inrush current of the D100 Series has been kept as low as possible. However, a series resistor may be inserted in the input line to limit this current further.

THERMAL PROTECTION

The D100 Series is equipped with a self-resetting thermal protection circuit. The converter will shut down if the internal temperature exceeds 100°C +/- 5°C output and automatically recover once the temperature drops below 80°C +/- 5°C.

CONNECTION IN SERIES

Figure below shows how to connect multiple outputs in series with the use of shunt diodes, taking into consideration that the highest achieved output voltage should remain below the rated isolation voltage.

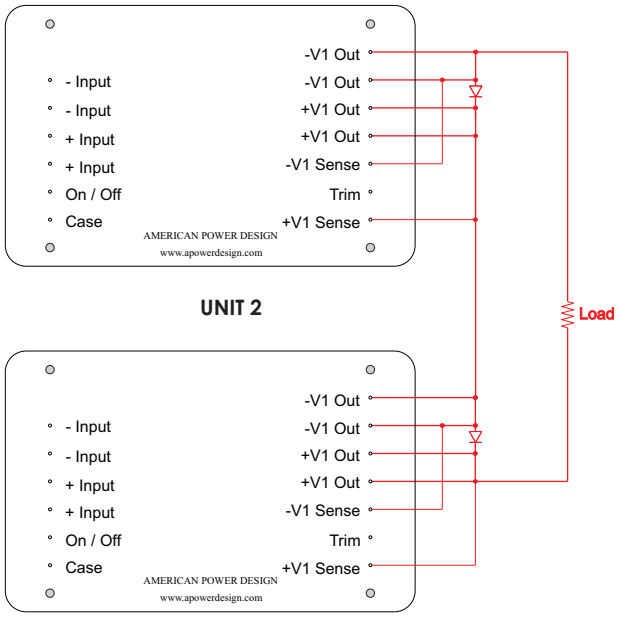

NOTE:
Series connection is recommended for single output models only.

D100 SERIES 100 WATT DC/DC CONVERTERS

APPLICATION NOTES

CONNECTION IN PARALLEL

The figure below shows how to connect outputs of several units with equal nominal output voltage in parallel with the use of oring diodes.

NOTE:
Parallel Operation is recommended for single output models only.

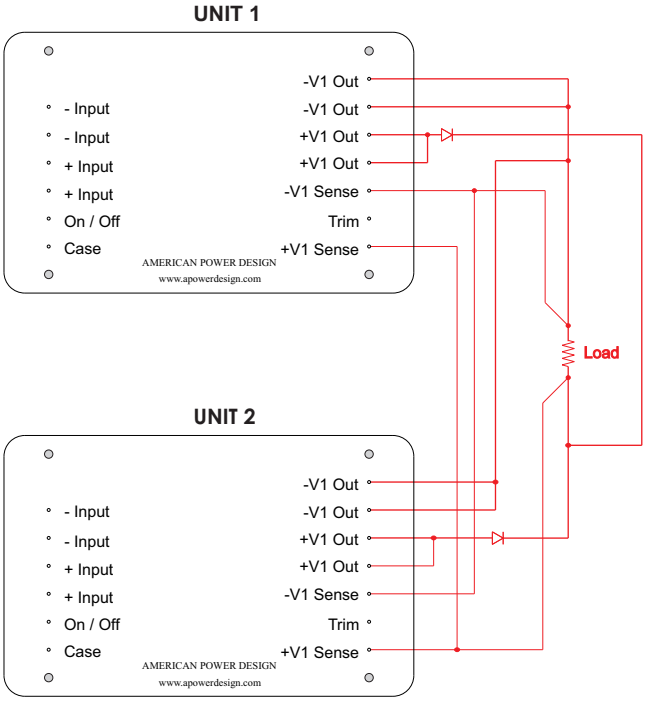

NOTE:
Current sharing can be adjusted by trimming both converters to the same output voltage

TRIM OUTPUT

The D100 Series Single & Dual models are equipped with an output trim (Pin 13), this feature allows the user to adjust the output voltage up or down 10% using a fixed precision resistor or adjustable trim pot.

The figures below show how to adjust the output voltage using a fixed precision resistor.

SINGLE OUTPUT

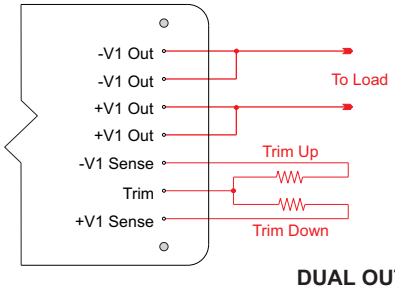

NOTE:
Proper utilization of Remote Sensing is needed to achieve a stable output voltage

DUAL OUTPUT

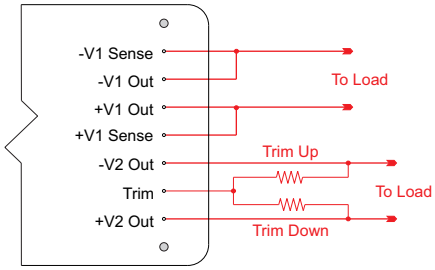

The figures below show how to adjust the output voltage using an external Trim Pot.

SINGLE OUTPUT

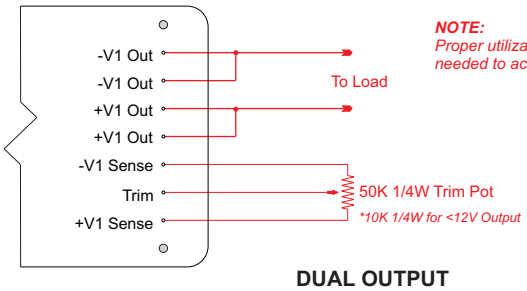

NOTE:
Proper utilizations of Remote Sensing is needed to achieve a stable output voltage

DUAL OUTPUT

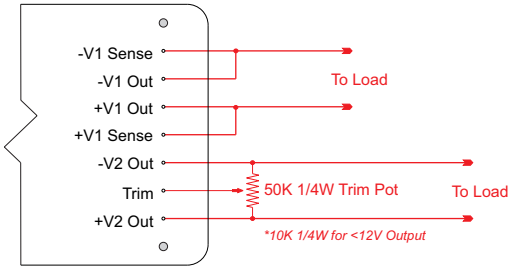

D100 SERIES 100 WATT DC/DC CONVERTERS

APPLICATION NOTES

LOAD TRANSIENT

Figure below shows a typical output voltage response, measured during a transition from full rated load current to no load current with no additional output filtering.

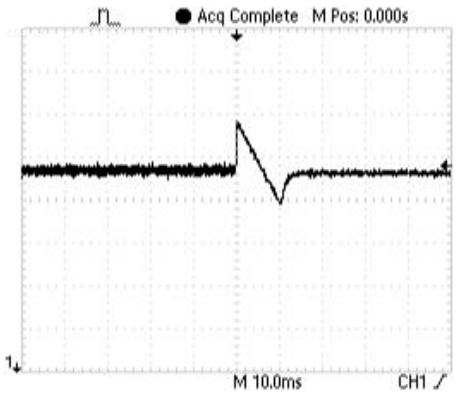

STARTUP TRANSIENT

Figure below shows a typical output voltage during turn-on, measured at no load current with no additional output filtering.

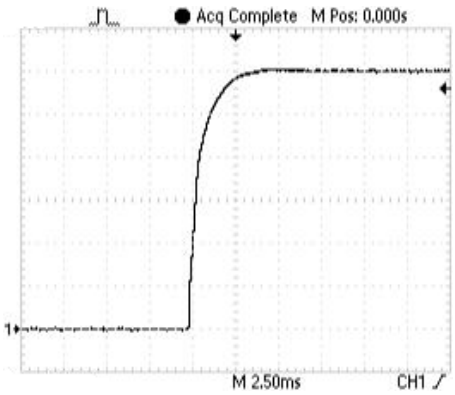

Figure below shows a typical output voltage response, measured during a transition from no load current to full rated load current with no additional output filtering.

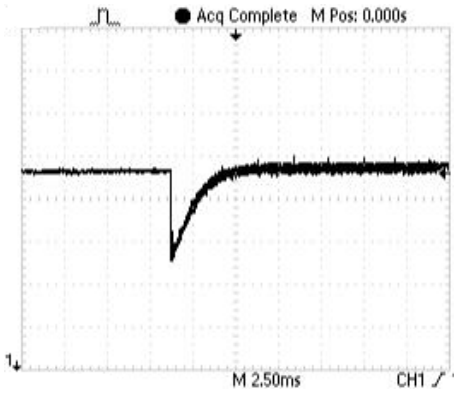

Figure below shows a typical output voltage during turn-on, measured at full rated load current with no additional output filtering.

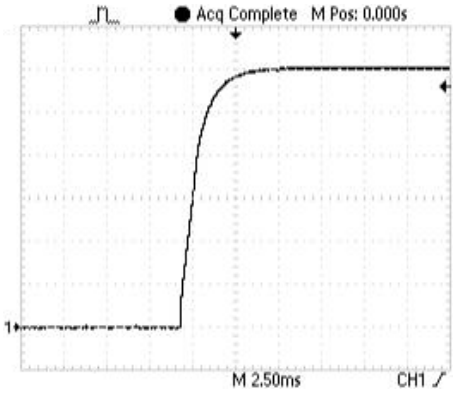

D100 SERIES 100 WATT DC/DC CONVERTERS

APPLICATION NOTES

RIPPLE AND NOISE

Figure below shows a typical output voltage ripple waveform, measured with 20MHz bandwidth filter at full rated load current with no additional output filtering. External low ESR capacitors may be added across output to further reduce ripple.

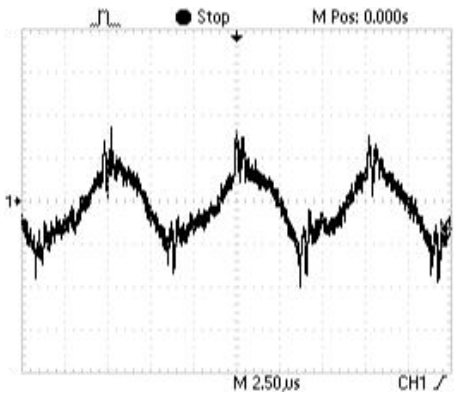

NUCLEAR AND MEDICAL APPLICATIONS

American Power Design products are not designed, intended for use in, or authorized for use as critical components in life support systems, equipment used in hazardous environments, or nuclear control systems without the express written consent of American Power Design, Inc.

CLEANING AGENTS

In order to avoid possible damage, any penetration of cleaning fluids must be prevented, since the power supplies are not hermetically sealed.

TECHNICAL REVISIONS

The appearance of products, including safety agency certifications pictured on labels, may change depending on the date manufactured. Specifications are subject to change without notice.

SAFETY REQUIREMENTS

The converters are designed to meet North American and International safety regulatory requirements per UL 60950-1/CSA 22.2 No. 60950-1-07 Second Edition, IEC 60950-1: 2005, and EN 60950-1:2006. Basic Insulation is provided between input and output. To comply with safety agencies requirements, an input line fuse must be used external to the converter. The table below provides the recommended fuse rating for use with this family of products.

Input Voltage Range	Fuse Rating
10-20Vdc	15A
18-36Vdc	8A
20-60Vdc	7.5A
36-72Vdc	4.5A

If one input fuse is used for a group of modules, the maximum fuse rating should not exceed 20A.

WARRANTY

All products manufactured by American Power Design, Inc. (APD) are warranted to be free of defects due to material or workmanship for a period of one year from date of shipment. At our option, APD will repair or replace any non-conforming product.
APD expressly disclaims any liability for consequential or incidental damages resulting from the use or misuse of its products by the purchaser or others.
This warranty is in lieu of all warranties expressed or implied, including the warranties of merchantability. No other warranties, obligations, or liabilities are expressed or implied.
All products being returned for repair require a return material authorization(RMA) assigned by APD prior to return shipment.

American Power Design, Inc.

"The best high voltage design solution"

RoHS

D150 SERIES 150 WATT DC/DC CONVERTERS

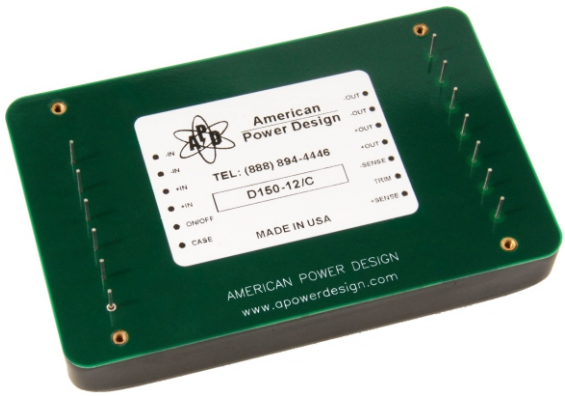

FEATURES

- Customer Selects Output Voltage
- Outputs to 28 Vdc
- Wide Input Ranges
  (10-20Vdc, 18-36Vdc, 20-60Vdc, 36-72Vdc)
- Excellent Line & Load Regulation
- Low Output Ripple
- 500 Vdc Output Isolation
- Continuous Short Circuit Protection
- Available in Chassis Mount
- Thermal Shutdown *(Self-Resetting)*

The D150 Series of DC/DC converters is available with single, dual, and triple outputs which are isolated from the input. They are enclosed in a six-sided metal case. Their low output ripple, and excellent regulation characteristics make them ideally suited for applications that demand a high degree of performance. All models will tolerate a short circuit indefinitely.

ELECTRICAL SPECIFICATIONS

Voltage Accuracy	+/-1%
Line Regulation	+/- 0.2%
Load Regulation	+/-1%
Outputs Ripple	< 100mV P-P
Outputs <10Vdc Ripple	< 75mV P-P
Output Trim (Single & Dual Models Only)	+/-10%
Input Filter	PI Network
Efficiency	87% (typ.)
Short Circuit Protection	Continuous
Switching Frequency	130 kHz
Output Isolation	500 Vdc
Input / Output Capacitance	< 1300pF

GENERAL SPECIFICATIONS

Temp. Stability	+/-0.02%/°C
Temp. (Operating , Case)	-40 to +85°C
Temp. (Storage)	-40 to +125°C
EMI/RFI	Six Sided Shield
Derating	None
Cooling	Free-Air Convection or Forced Air
Thermal Shut Down	100°C +/- 5°C *(Self-Resetting)*

PHYSICAL SPECIFICATIONS

Dimensions	3.5 x 5.5 x 0.92 inches
Weight	19.5 Oz
Case Material	Black Coated Metal *(With Non-Conductive Base Plate)*

D150 SERIES 150 WATT DC/DC CONVERTERS

REPRESENTATIVE MODEL LISTING

MODEL NUMBER		INPUT SPECIFICATIONS		OUTPUT SPECIFICATIONS					
				OUTPUT #1		OUTPUT #2		OUTPUT #3	
Non-RoHs	RoHs	VOLTAGE	CURRENT	VOLTAGE	CURRENT	VOLTAGE	CURRENT	VOLTAGE	CURRENT
D150-5	D150-5/Y	10V - 20Vdc	10.4 A	5 Vdc	20 A	-	-	-	-
D150-12	D150-12/Y	10V - 20Vdc	12.8 A	12 Vdc	10.4 A	-	-	-	-
D150-12/12	D150-12/12/Y	10V - 20Vdc	12.24 A	12 Vdc	5.2 A	12 Vdc	5.2 A	-	-
D150-15	D150-15/Y	10V - 20Vdc	12.8 A	15 Vdc	8.3 A	-	-	-	-
D150-15/15	D150-15/15/Y	10V - 20Vdc	12.21 A	15 Vdc	4.15 A	15 Vdc	4.15 A	-	-
D150-24	D150-24/Y	10V - 20Vdc	12.4A	24 Vdc	5 A	-	-	-	-
D150-5/12/12	D150-5/12/12/Y	10V - 20Vdc	11.2 A	5 Vdc	12 A	-12 Vdc	3 A	+12 Vdc	3 A
D150-5/15/15	D150-5/15/15/Y	10V - 20Vdc	11.2 A	5 Vdc	12 A	-15 Vdc	2.5 A	+15 Vdc	2.5 A
D150-5/A	D150-5/A/Y	18V - 36Vdc	7.4 A	5 Vdc	30 A	-	-	-	-
D150-12/A	D150-12/A/Y	18V - 36Vdc	8.8 A	12 Vdc	15 A	-	-	-	-
D150-12/12/A	D150-12/12/A/Y	18V - 36Vdc	8.8 A	12 Vdc	7.5 A	12 Vdc	7.5 A	-	-
D150-15/A	D150-15/A/Y	18V - 36Vdc	8.8 A	15 Vdc	12 A	-	-	-	-
D150-15/15/A	D150-15/15/A/Y	18V - 36Vdc	8.8 A	15 Vdc	6 A	15 Vdc	6 A	-	-
D150-24/A	D150-24/A/Y	18V - 36Vdc	9.5 A	24 Vdc	8 A	-	-	-	-
D150-5/12/12/A	D150-5/12/12/A/Y	18V - 36Vdc	8.6 A	5 Vdc	15 A	-12 Vdc	4 A	+12 Vdc	4 A
D150-5/15/15/A	D150-5/15/15/A/Y	18V - 36Vdc	8.6 A	5 Vdc	15 A	-15 Vdc	3.3 A	+15 Vdc	3.3 A
D150-5/B	D150-5/B/Y	20V - 60Vdc	7.7 A	5 Vdc	30 A	-	-	-	-
D150-12/B	D150-12/B/Y	20V - 60Vdc	9.1 A	12 Vdc	15 A	-	-	-	-
D150-12/12/B	D150-12/12/B/Y	20V - 60Vdc	9.1 A	12 Vdc	7.5 A	12 Vdc	7.5 A	-	-
D150-15/B	D150-15/B/Y	20V - 60Vdc	9.1 A	15 Vdc	12 A	-	-	-	-
D150-15/15/B	D150-15/15/B/Y	20V - 60Vdc	9.1 A	15 Vdc	6 A	15 Vdc	6 A	-	-
D150-24/B	D150-24/B/Y	20V - 60Vdc	9.8 A	24 Vdc	8 A	-	-	-	-
D150-5/12/12/B	D150-5/12/12/B/Y	20V - 60Vdc	8.9 A	5 Vdc	15 A	-12 Vdc	4 A	+12 Vdc	4 A
D150-5/15/15/B	D150-5/15/15/B/Y	20V - 60Vdc	8.9 A	5 Vdc	15 A	-15 Vdc	3.3 A	+15 Vdc	3.3 A
D150-5/C	D150-5/C/Y	36V - 72Vdc	3.7 A	5 Vdc	30 A	-	-	-	-
D150-12/C	D150-12/C/Y	36V - 72Vdc	4.4 A	12 Vdc	15 A	-	-	-	-
D150-12/12/C	D150-12/12/C/Y	36V - 72Vdc	4.4 A	12 Vdc	7.5 A	12 Vdc	7.5 A	-	-
D150-15/C	D150-15/C/Y	36V - 72Vdc	4.4 A	15 Vdc	12 A	-	-	-	-
D150-15/15/C	D150-15/15/C/Y	36V - 72Vdc	4.4 A	15 Vdc	6 A	15 Vdc	6 A	-	-
D150-24/C	D150-24/C/Y	36V - 72Vdc	4.7 A	24 Vdc	8 A	-	-	-	-
D150-5/12/12/C	D150-5/12/12/C/Y	36V - 72Vdc	4.6 A	5 Vdc	15 A	-12 Vdc	4 A	+12 Vdc	4 A
D150-5/15/15/C	D150-5/15/15/C/Y	36V - 72Vdc	4.6 A	5 Vdc	15 A	-15 Vdc	3.3 A	+15 Vdc	3.3 A

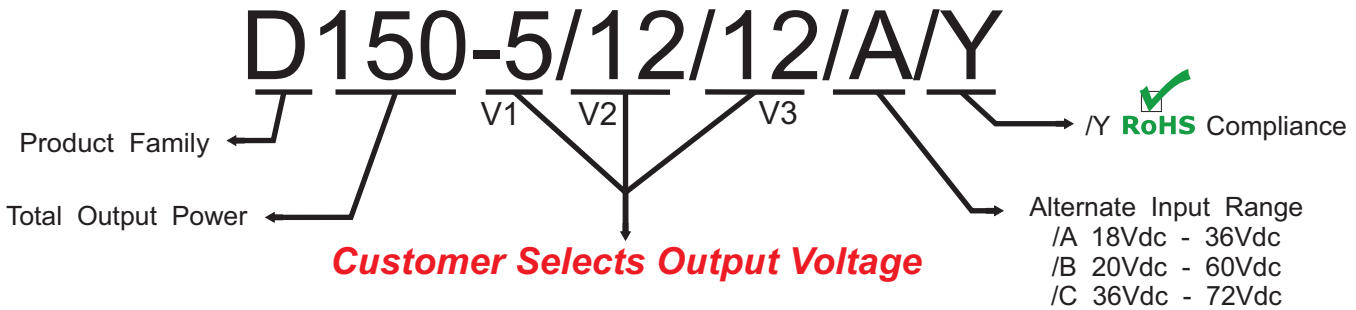

The D150 Series are designed such that the customer may order any output voltage combination from 5Vdc to 28Vdc at no additional charge.

D150 SERIES 150 WATT DC/DC CONVERTERS

STANDARD PC MOUNT

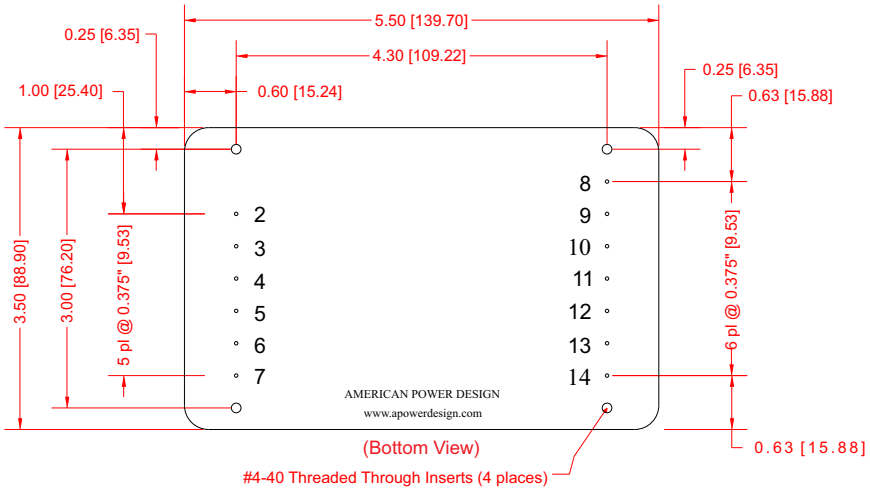

Dimensions are in Inches
[Metric equivalents in brackets]

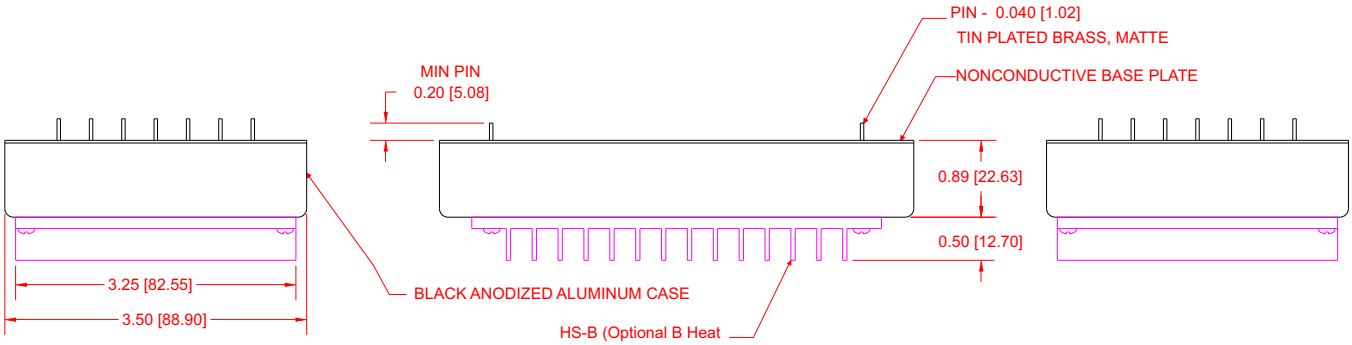

PIN #	FUNCTION			PIN #	FUNCTION		
	Single	Dual	Triple		Single	Dual	Triple
1	No Pin	No Pin	No Pin	8	-V1 Out	-V1 Sense	-V1 Sense
2	- Input	- Input	- Input	9	- V1 Out	-V1 Out	-V1 Out
3	- Input	- Input	- Input	10	+V1 Out	+V1 Out	+V1 Out
4	+ Input	+ Input	+ Input	11	+V1 Out	+V1 Sense	+V1 Sense
5	+ Input	+ Input	+ Input	12	-V1 Sense	-V2 Out	-V2 Out
6	On / Off	On / Off	On / Off	13	V1 Trim	V2 Trim	Com 2 & 3
7	Case	Case	Case	14	+V1 Sense	+V2 Out	+V3 Out

D150 SERIES 150 WATT DC/DC CONVERTERS

-TS CHASSIS MOUNT OPTION

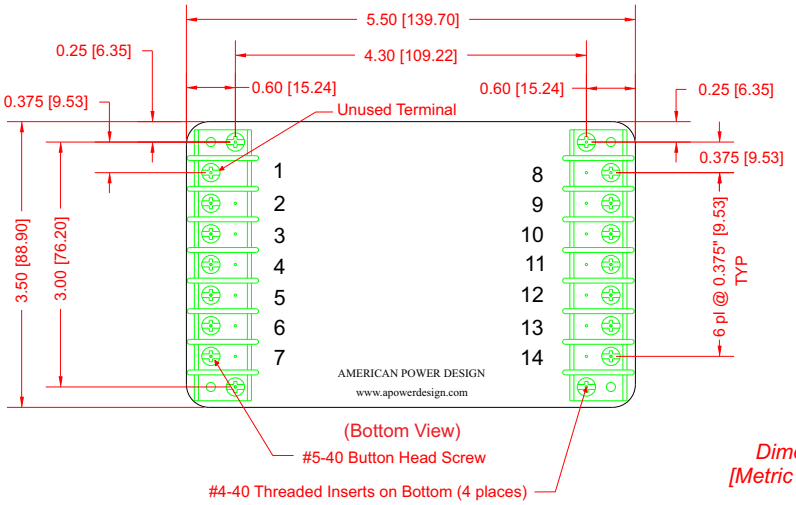

Dimensions are in Inches
[Metric equivalents in brackets]

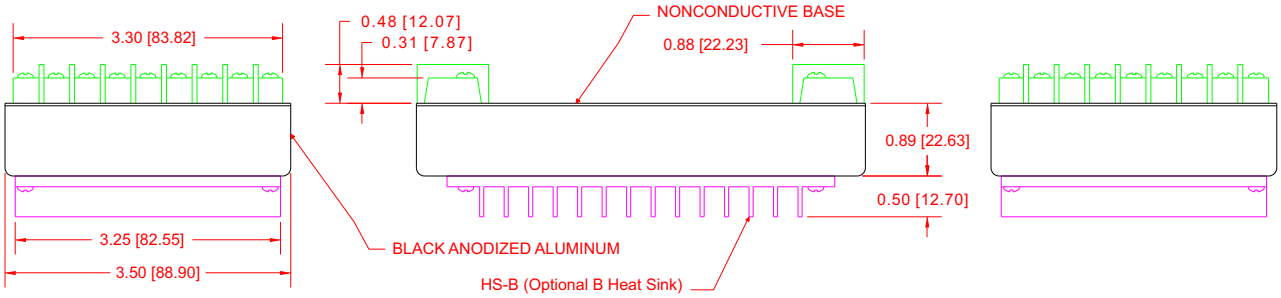

PIN #	FUNCTION			PIN #	FUNCTION		
	Single	Dual	Triple		Single	Dual	Triple
1	N/C	N/C	N/C	8	-V1 Out	-V1 Sense	-V1 Sense
2	- Input	- Input	- Input	9	- V1 Out	-V1 Out	-V1 Out
3	- Input	- Input	- Input	10	+V1 Out	+V1 Out	+V1 Out
4	+ Input	+ Input	+ Input	11	+V1 Out	+V1 Sense	+V1 Sense
5	+ Input	+ Input	+ Input	12	-V1 Sense	-V2 Out	-V2 Out
6	On / Off	On / Off	On / Off	13	V1 Trim	V2 Trim	Com 2 & 3
7	Case	Case	Case	14	+V1 Sense	+V2 Out	+V3 Out

D150 SERIES 150 WATT DC/DC CONVERTERS

APPLICATION NOTES

INPUT AND OUTPUT IMPEDANCE

The D150 Series of power converters have been designed to be stable with no external capacitors when used in low inductance input and output circuits. However, in some applications, the inductance associated with the distribution from the power source to the input of the converter can affect the stability of the converter. The addition of a 100 µF electrolytic capacitor with an ESR <1 Ohm across the input helps ensure stability of the converter. In many applications, the user has to use decoupling capacitance at the load.

SHORT CIRCUIT PROTECTION

The D150 Series is equipped with short circuit protection. The converter will fold-back the input power whenever a short circuit is applied to its output and automatically recover after the overload condition is removed.

REMOTE SENSING

The D150 Series is equipped with remote sensing, this feature compensates for voltage drops occurring between the output pins of the converter and the load.
The SENSE(-) and SENSE(+) pins should be connected at the load or at the point where regulation is required.

The feedback through the sensing pins allows the converter to output a higher voltage at the output pins to compensate for the voltage drop on the connections between the converters output and the load. It will compensate for up to 0.5V drop between the converter and the load.

Because the sense leads carry minimal current, large traces on the end-user board are not required. However, sense traces should be located close to a ground plane to minimize system noise and insure optimum performance. When wiring discretely, twisted pair wires should be used to connect the sense lines to the load to reduce susceptibility to noise.

The figures below show the correct method of installation using this option.

SINGLE OUTPUT

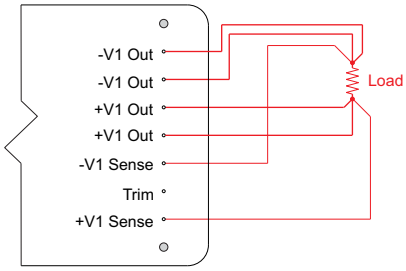

NOTE:
In the case of Single output models all 4 output pins should be used to achieve the highest efficience and reliability.

DUAL OUTPUT

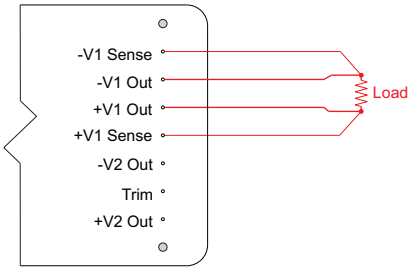

NOTE:
Always disconnect the sense wires before disconnecting the output wires when the unit is under power. otherwise, the supply may be permanently damaged.

TRIPLE OUTPUT

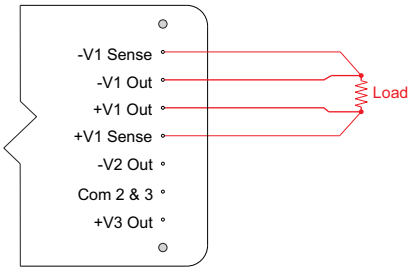

If remote sensing is not required, the SENSE(-) pin must be connected to the Output(-) pin and the SENSE(+) pin must be connected to the Output(+) pin to ensure the converter will regulate at the specified output voltage. If these connections are not made, the converter will deliver an output voltage that is slightly higher than the specified value.

D150 SERIES 150 WATT DC/DC CONVERTERS

APPLICATION NOTES

ISOLATION

The output of the D150 Series is galvanically isolated from both the input and case, capacitance is < 1300pF and resistance is > 10G Ohm.
The figure below shows the internal RC network that connects the Case (Pin 7) to Input(-) (Pins 2&3). This aides in reducing unwanted noise.

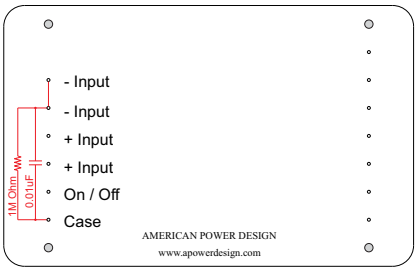

REMOTE ON/OFF CONTROL

The On/Off control (Pin 6) allows the user to shut down the converter mechanically or logically using a relay or a TTL or CMOS logic signal.

Converter Off: Vc <1.5Vdc
Converter On: Vc >3Vdc

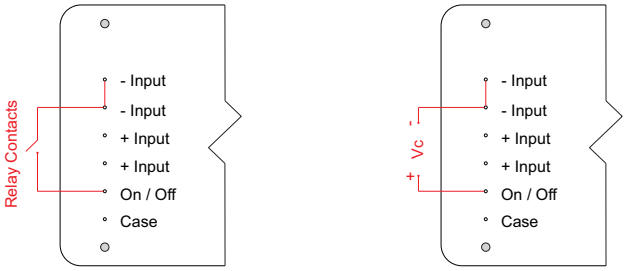

INRUSH CURRENT

The inrush current of the D150 Series has been kept as low as possible. However, a series resistor may be inserted in the input line to limit this current further.

THERMAL PROTECTION

The D150 Series is equipped with a self-resetting thermal protection circuit. The converter will shut down if the internal temperature exceeds 100°C +/- 5°C output and automatically recover once the temperature drops below 80°C +/- 5°C.

CONNECTION IN SERIES

Figure below shows how to connect multiple outputs in series with the use of shunt diodes, taking into consideration that the highest achieved output voltage should remain below the rated isolation voltage.

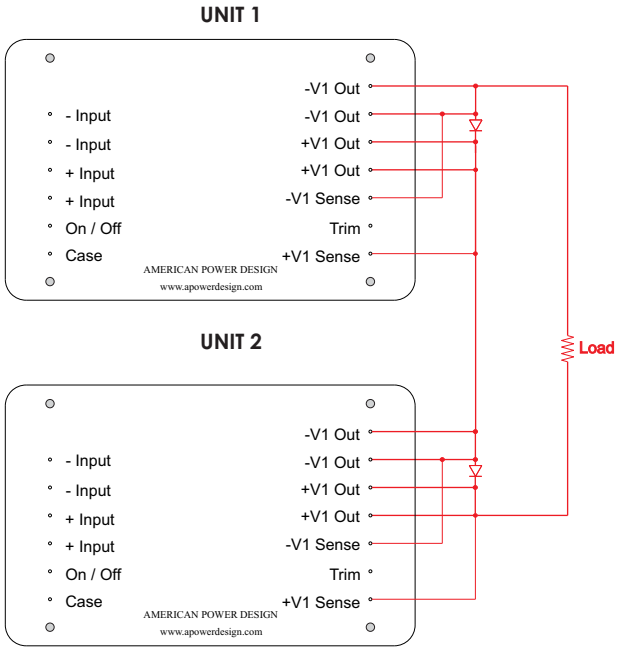

NOTE:
Series connection is recommended for single output models only.

D150 SERIES 150 WATT DC/DC CONVERTERS

APPLICATION NOTES

CONNECTION IN PARALLEL

The figure below shows how to connect outputs of several units with equal nominal output voltage in parallel with the use of oring diodes.

NOTE:
Parallel Operation is recommended for single output models only.

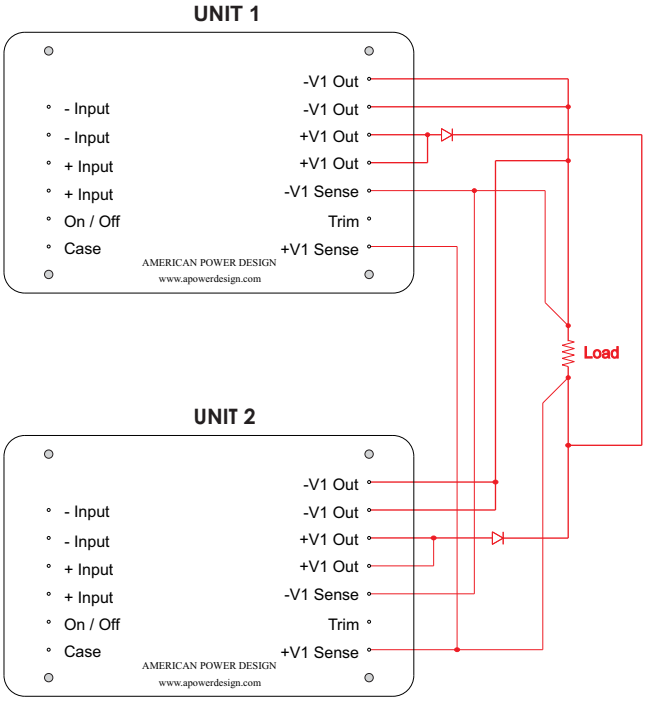

NOTE:
Current sharing can be adjusted by trimming both converters to the same output voltage

TRIM OUTPUT

The D150 Series Single & Dual models are equipped with an output trim (Pin 13), this feature allows the user to adjust the output voltage up or down 10% using a fixed precision resistor or adjustable trim pot.

The figures below show how to adjust the output voltage using a fixed precision resistor.

SINGLE OUTPUT

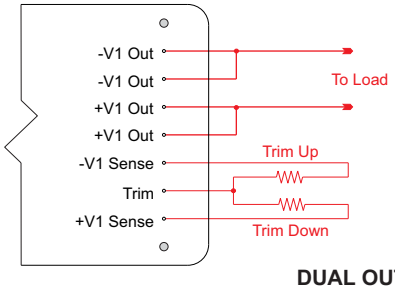

NOTE:
Proper utilization of Remote Sensing is needed to achieve a stable output voltage

DUAL OUTPUT

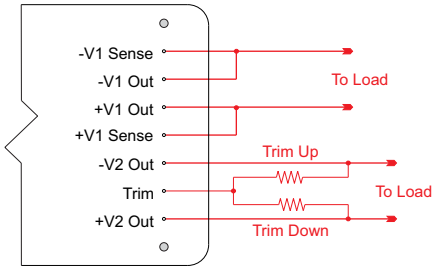

The figures below show how to adjust the output voltage using an external Trim Pot.

SINGLE OUTPUT

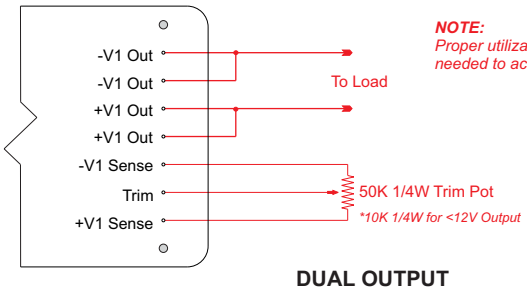

NOTE:
Proper utilizations of Remote Sensing is needed to achieve a stable output voltage

DUAL OUTPUT

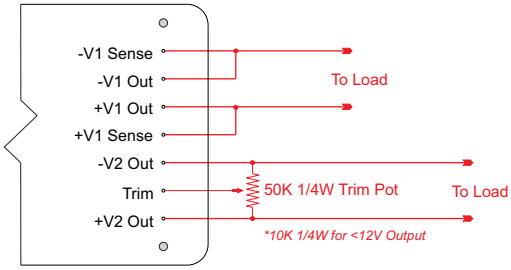

D150 SERIES 150 WATT DC/DC CONVERTERS

APPLICATION NOTES

LOAD TRANSIENT

Figure below shows a typical output voltage response, measured during a transition from full rated load current to no load current with no additional output filtering.

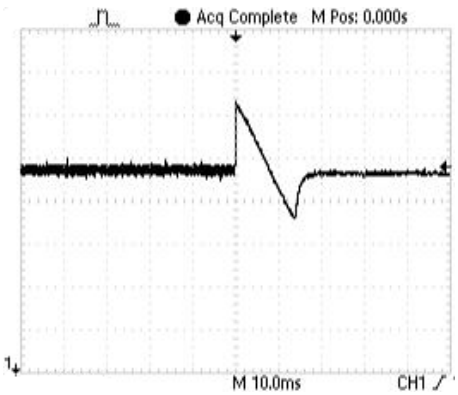

STARTUP TRANSIENT

Figure below shows a typical output voltage during turn-on, measured at no load current with no additional output filtering.

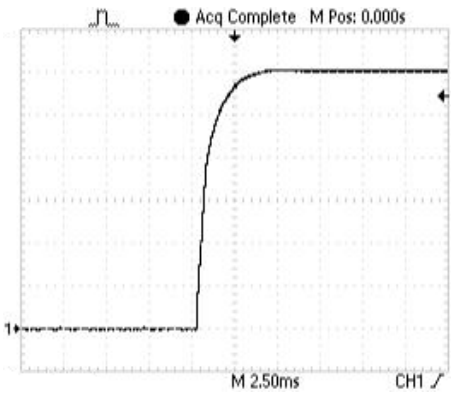

Figure below shows a typical output voltage response, measured during a transition from no load current to full rated load current with no additional output filtering.

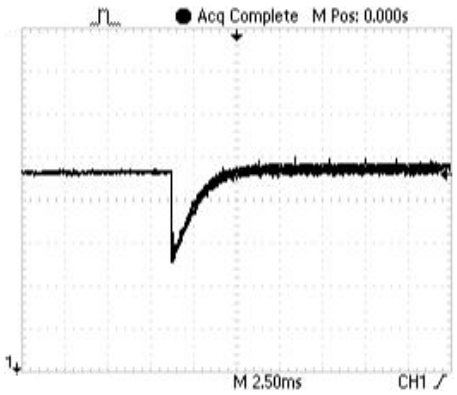

Figure below shows a typical output voltage during turn-on, measured at full rated load current with no additional output filtering.

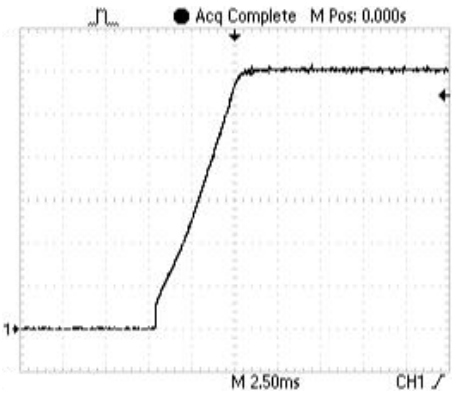

D150 SERIES 150 WATT DC/DC CONVERTERS

APPLICATION NOTES

RIPPLE AND NOISE

Figure below shows a typical output voltage ripple waveform, measured with 20MHz bandwidth filter at full rated load current with no additional output filtering. External low ESR capacitors may be added across output to further reduce ripple.

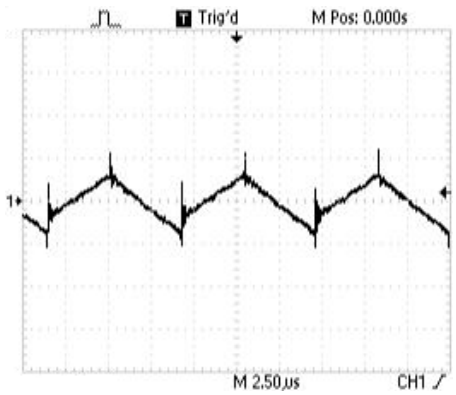

NUCLEAR AND MEDICAL APPLICATIONS

American Power Design products are not designed, intended for use in, or authorized for use as critical components in life support systems, equipment used in hazardous environments, or nuclear control systems without the express written consent of American Power Design, Inc.

CLEANING AGENTS

In order to avoid possible damage, any penetration of cleaning fluids must be prevented, since the power supplies are not hermetically sealed.

TECHNICAL REVISIONS

The appearance of products, including safety agency certifications pictured on labels, may change depending on the date manufactured. Specifications are subject to change without notice.

SAFETY REQUIREMENTS

The converters are designed to meet North American and International safety regulatory requirements per UL 60950-1/CSA 22.2 No. 60950-1-07 Second Edition, IEC 60950-1: 2005, and EN 60950-1:2006. Basic Insulation is provided between input and output. To comply with safety agencies requirements, an input line fuse must be used external to the converter. The table below provides the recommended fuse rating for use with this family of products.

Input Voltage Range	Fuse Rating
10-20Vdc	20A
18-36Vdc	11A
20-60Vdc	10A
36-72Vdc	5.5A

If one input fuse is used for a group of modules, the maximum fuse rating should not exceed 20A.

WARRANTY

All products manufactured by American Power Design, Inc. (APD) are warranted to be free of defects due to material or workmanship for a period of one year from date of shipment. At our option, APD will repair or replace any non-conforming product.
APD expressly disclaims any liability for consequential or incidental damages resulting from the use or misuse of its products by the purchaser or others.
This warranty is in lieu of all warranties expressed or implied, including the warranties of merchantability. No other warranties, obligations, or liabilities are expressed or implied.
All products being returned for repair require a return material authorization(RMA) assigned by APD prior to return shipment.

American Power Design, Inc.

"The best high voltage design solution"

RoHS

E1 SERIES 1 WATT PROGRAMABLE REGULATED HV DC/DC CONVERTERS

FEATURES

- Customer Selects Output Voltage
- Fully Regulated Outputs to + or - 8000 Vdc
- 0-100% Programable Output
- High Stability (<0.005%/°C)
- Low Output Noise & EMI/RFI
- External Calibration Adjustment
- Continuous Short Circuit Protection
- UL & CE Pending

The E1 Series miniature regulated high voltage DC/DC converter offers a 100% programable high voltage output using a 0-5Vdc analog signal. Their small size, low output ripple, and excellent regulation make them ideally suited for applications that demand a high degree of performance. All models will tolerate a short circuit indefinitely.

ELECTRICAL SPECIFICATIONS

Input Voltage Range	11.5V - 16Vdc
Output Voltage Accuracy	+/- 1%
Line Regulation	<0.05%
Load Regulation	<0.05%
Output Ripple	0.002% P-P
Programming Voltage	0 - 5Vdc @ <100uA
Programming Linearity (5% to 100% Vout)	<0.5%
Input Filter	Low ESR Capacitor
Reverse Input Protection	50Vdc
Short Circuit Protection	Continuous
Switching Frequency	180 - 250 kHz
Calibration Adjustment	5 to 10%
Response Time	<250 ms (Full Load, full scale response)
Programming Voltage Shutdown	> 5.2Vdc

GENERAL SPECIFICATIONS

Stability	< 0.01% / Hr.
Temp. Stability	+/- 0.005%/°C
Temp. (Operating , Case)	-10 to +60°C
Temp. (Storage)	-40 to +125°C
Humidity	0 to 95% (Non-Condensing)
Thermal Shock Limit	1°C / 10 Seconds
EMI/RFI	Six Sided Shield
Derating	None
Cooling	Free-Air Convection
Certifications	UL & CE Pending

PHYSICAL SPECIFICATIONS

Dimensions & Weight	1.1 x 1.4 x 0.5 inches @ 1.1 Oz
Dimensions & Weight	1.1 x 1.75 x 0.5 inches @ 1.3 Oz
Dimensions & Weight	1.1 x 2.6 x 0.5 inches @ 1.8 Oz
Case Material	Nickle Plated Metal *(With Non-Conductive Base Plate)*

Tel (888) 894-4446 WWW.APOWERDESIGN.COM Fax (603) 898-6534

E1 SERIES 1 WATT PROGRAMABLE REGULATED HV DC/DC CONVERTERS

OUTPUT VOLTAGES FROM 100V TO 2000VDC

REPRESENTATIVE MODEL LISTING

MODEL NUMBER		INPUT CURRENT		OUTPUT SPECIFICATIONS					SWITCHING FREQUENCY
Non-RoHs	RoHs	NO LOAD	FULL LOAD	VOLTAGE	RIPPLE	CURRENT	REGULATION LOAD	REGULATION LINE	
E1-P10	E1-P10/Y	<50 mA	<160 mA	0V to +100Vdc	<0.75% (0.75V p-p)	0 - 10mA	<0.1%	<0.1%	250 kHz
E1-N10	E1-N10/Y	<50 mA	<160 mA	0V to -100Vdc	<0.75% (0.75V p-p)	0 - 10mA	<0.1%	<0.1%	250 kHz
E1-P20	E1-P20/Y	<50 mA	<160 mA	0V to +200Vdc	<0.05% (0.1V p-p)	0 - 5mA	<0.1%	<0.1%	250 kHz
E1-N20	E1-N20/Y	<50 mA	<160 mA	0V to -200Vdc	<0.05% (0.1V p-p)	0 - 5mA	<0.1%	<0.1%	250 kHz
E1-P30	E1-P30/Y	<50 mA	<160 mA	0V to +300Vdc	<0.03% (90mV p-p)	0 - 3.3mA	<0.1%	<0.1%	250 kHz
E1-N30	E1-N30/Y	<50 mA	<160 mA	0V to -300Vdc	<0.03% (90mV p-p)	0 - 3.3mA	<0.1%	<0.1%	250 kHz
E1-P50	E1-P50/Y	<50 mA	<160 mA	0V to +500Vdc	<0.004% (20mV p-p)	0 - 2mA	<0.05%	<0.05%	250 kHz
E1-N50	E1-N50/Y	<50 mA	<160 mA	0V to -500Vdc	<0.005% (25mV p-p)	0 - 2mA	<0.05%	<0.05%	250 kHz
E1-P60	E1-P60/Y	<90 mA	<200 mA	0V to +600Vdc	<0.003% (18mV p-p)	0 - 1.67mA	<0.05%	<0.05%	200 kHz
E1-N60	E1-N60/Y	<90 mA	<200 mA	0V to -600Vdc	<0.003% (18mV p-p)	0 - 1.67mA	<0.05%	<0.05%	200 kHz
E1-P100	E1-P100/Y	<90 mA	<200 mA	0V to +1000Vdc	<0.005% (50mV p-p)	0 - 1mA	<0.05%	<0.05%	190 kHz
E1-N100	E1-N100/Y	<90 mA	<200 mA	0V to -1000Vdc	<0.002% (20mV p-p)	0 - 1mA	<0.05%	<0.05%	190 kHz
E1-P125	E1-P125/Y	<100 mA	<250 mA	0V to +1250Vdc	<0.004% (50mV p-p)	0 - 1mA	<0.05%	<0.05%	180 kHz
E1-N125	E1-N125/Y	<100 mA	<250 mA	0V to -1250Vdc	<0.003% (37mV p-p)	0 - 1mA	<0.05%	<0.05%	180 kHz
E1-P150	E1-P150/Y	<100 mA	<220 mA	0V to +1500Vdc	<0.002% (30mV p-p)	0 - 0.67mA	<0.05%	<0.05%	180 kHz
E1-N150	E1-N150/Y	<100 mA	<220 mA	0V to -1500Vdc	<0.002% (30mV p-p)	0 - 0.67mA	<0.05%	<0.05%	180 kHz
E1-P200	E1-P200/Y	<100 mA	<220 mA	0V to +2000Vdc	<0.002% (40mV p-p)	0 - 0.5mA	<0.05%	<0.05%	180 kHz
E1-N200	E1-N200/Y	<100 mA	<220 mA	0V to -2000Vdc	<0.002% (40mV p-p)	0 - 0.5 mA	<0.05%	<0.05%	180 kHz

E1-P100/Y

Product Family

Total Output Power

Positive/Negative Output

/Y RoHS Compliance

Customer Selects Output Voltage *

The E1 Series are designed such that the customer may order any output voltage (positive or negative) from 100Vdc to 2000Vdc at no additional charge.

ACTUAL OUTPUT VOLTAGE IS 10X

Output Voltage Restriction applies to 1.1 x 1.4 x 0.5 inch Case Only

E1 SERIES 1 WATT PROGRAMABLE REGULATED HV DC/DC CONVERTERS

OUTPUT VOLTAGES FROM 100V TO 2000VDC

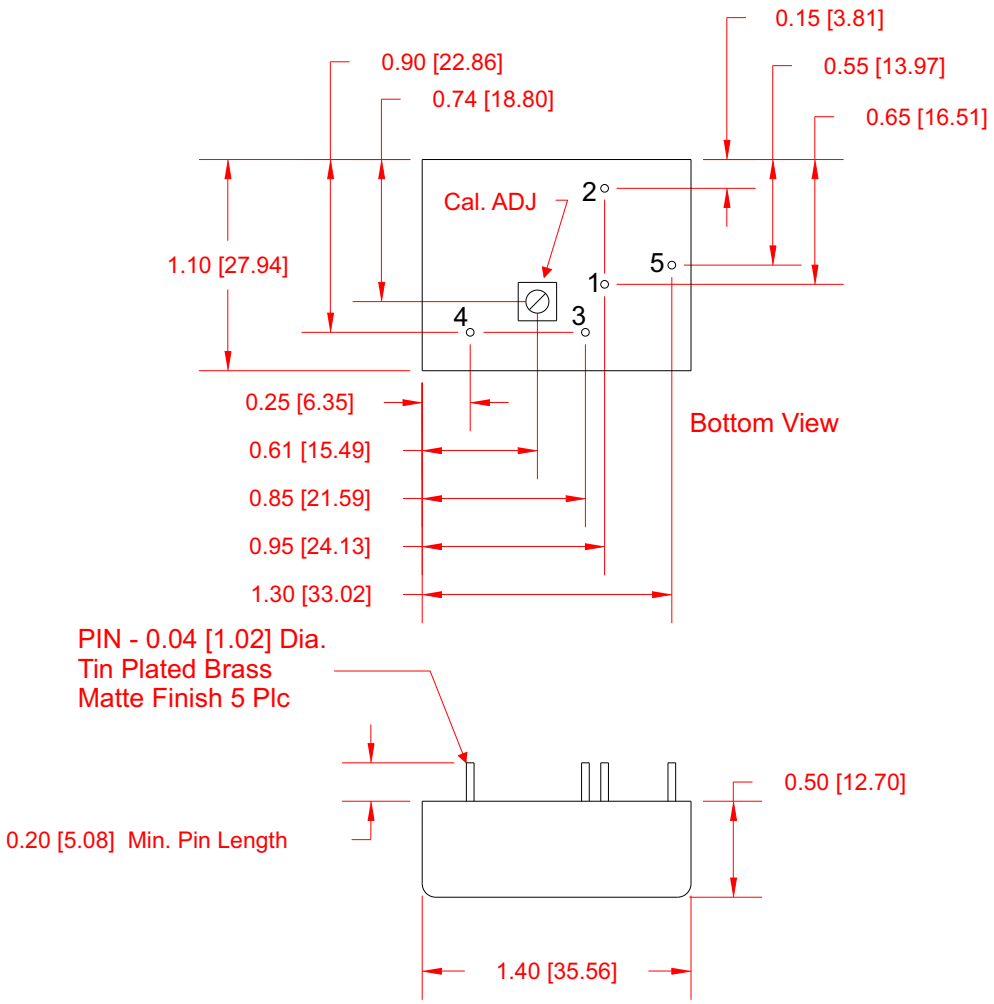

PIN #	FUNCTION
1	+ Input
2	Gnd
3	Control / Programming Voltage
4	HV Output
5	Case Gnd

Dimensions are in Inches
[Metric equivalents in brackets]

E1 SERIES 1 WATT PROGRAMABLE REGULATED HV DC/DC CONVERTERS

OUTPUT VOLTAGES FROM 2100V TO 4000VDC

REPRESENTATIVE MODEL LISTING									
MODEL NUMBER		INPUT CURRENT		OUTPUT SPECIFICATIONS					SWITCHING FREQUENCY
Non-RoHs	RoHs	NO LOAD	FULL LOAD	VOLTAGE	RIPPLE	CURRENT	REGULATION		
							LOAD	LINE	
E1-P250	E1-P250/Y	<100 mA	<250 mA	0V to +2500Vdc	<0.1% (2.5V p-p)	0 - 0.4mA	<0.05%	<0.05%	190 kHz
E1-N250	E1-N250/Y	<100 mA	<250 mA	0V to -2500Vdc	<0.2% (5.0V p-p)	0 - 0.4mA	<0.05%	<0.05%	190 kHz
E1-P300	E1-P300/Y	<100 mA	<250 mA	0V to +3000Vdc	<0.1% (3.0V p-p)	0 - 0.33mA	<0.05%	<0.05%	190 kHz
E1-N300	E1-N300/Y	<100mA	<250 mA	0V to -3000Vdc	<0.2% (6.0V p-p)	0 - 0.33mA	<0.05%	<0.05%	190 kHz
E1-P400	E1-P400/Y	<100 mA	<250 mA	0V to +4000Vdc	<0.1% (4.0V p-p)	0 - 0.25mA	<0.05%	<0.05%	190 kHz
E1-N400	E1-N400/Y	<100 mA	<250 mA	0V to -4000Vdc	<0.1% (4.0V p-p)	0 - 0.25mA	<0.05%	<0.05%	190 kHz

E1-P250/Y

Product Family

Total Output Power

Positive/Negative Output

/Y RoHS Compliance

Customer Selects Output Voltage *

The E1 Series are designed such that the customer may order any output voltage (positive or negative) from 2100Vdc to 4000Vdc at no additional charge.

****ACTUAL OUTPUT VOLTAGE IS 10X***

Output Voltage Restriction applies to 1.1 x 1.75 x 0.5 inches Case Only

E1 SERIES 1 WATT PROGRAMABLE REGULATED HV DC/DC CONVERTERS

OUTPUT VOLTAGES FROM 2100V TO 4000VDC

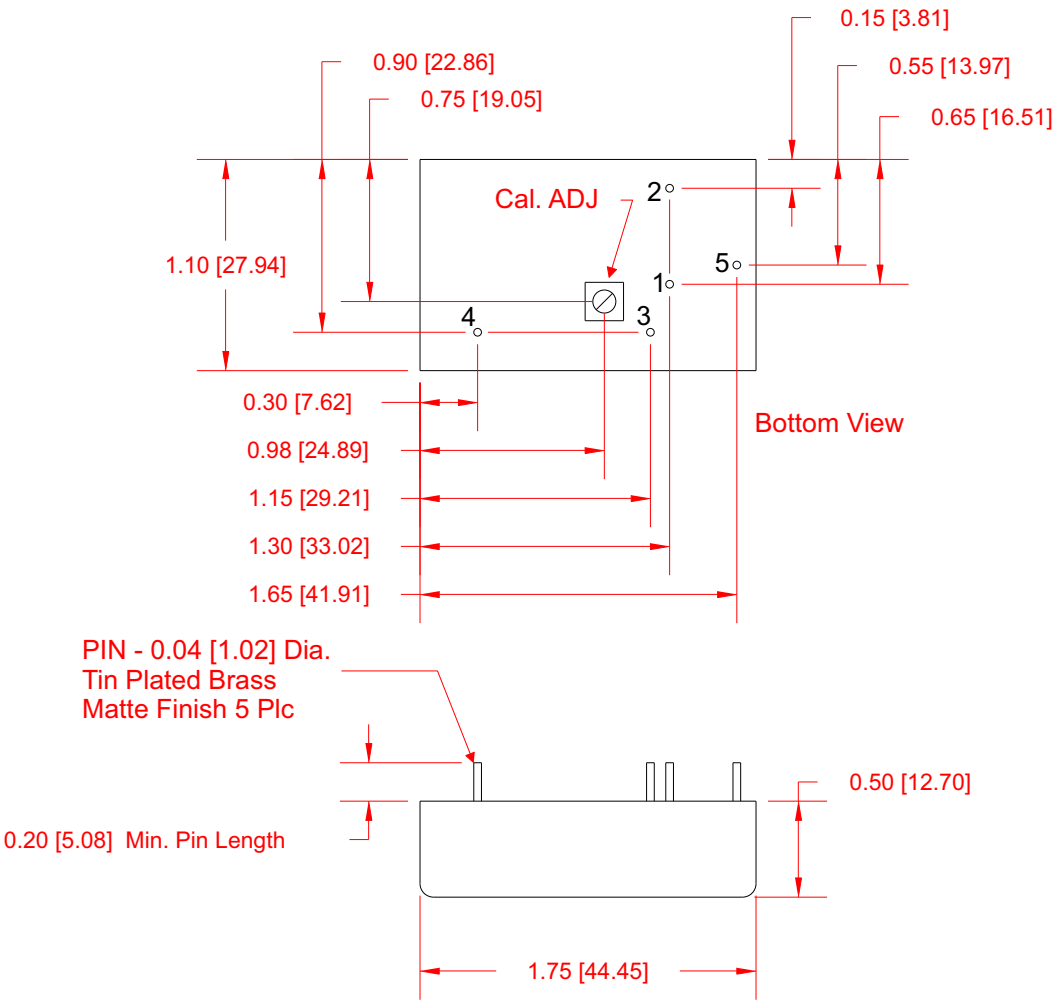

Dimensions are in Inches
[Metric equivalents in brackets]

PIN #	FUNCTION
1	+ Input
2	Gnd
3	Control / Programming Voltage
4	HV Output
5	Case Gnd

E1 SERIES 1 WATT PROGRAMABLE REGULATED HV DC/DC CONVERTERS

OUTPUT VOLTAGES FROM 4100V TO 8000VDC

REPRESENTATIVE MODEL LISTING									
MODEL NUMBER		INPUT CURRENT		OUTPUT SPECIFICATIONS					SWITCHING FREQUENCY
Non-RoHs	RoHs	NO LOAD	FULL LOAD	VOLTAGE	RIPPLE	CURRENT	REGULATION		
							LOAD	LINE	
E1-P500	E1-P500/Y	<100 mA	<230 mA	0V to +5000Vdc	<0.1% (5.0V p-p)	0 - 0.2mA	<0.05%	<0.05%	180 kHz
E1-N500	E1-N500/Y	<100 mA	<230 mA	0V to -5000Vdc	<0.1% (5.0V p-p)	0 - 0.2mA	<0.05%	<0.05%	180 kHz
E1-P600	E1-P600/Y	<100 mA	<230 mA	0V to +6000Vdc	<0.1% (6.0V p-p)	0 - 0.166mA	<0.05%	<0.05%	180 kHz
E1-N600	E1-N600/Y	<100mA	<230 mA	0V to -6000Vdc	<0.1% (6.0V p-p)	0 - 0.166mA	<0.05%	<0.05%	180 kHz
E1-P800	E1-P800/Y	<150 mA	<230 mA	0V to +8000Vdc	<0.15% (12V p-p)	0 - 0.125mA	<0.05%	<0.05%	180 kHz
E1-N800	E1-N800/Y	<150 mA	<230 mA	0V to -8000Vdc	<0.15% (12V p-p)	0 - 0.125mA	<0.05%	<0.05%	180 kHz

E1-P800/Y

Product Family

Total Output Power

Positive/Negative Output

/Y RoHS Compliance

Customer Selects Output Voltage *

The E1 Series are designed such that the customer may order any output voltage (positive or negative) from 4100Vdc to 8000Vdc at no additional charge.

****ACTUAL OUTPUT VOLTAGE IS 10X***

Output Voltage Restriction applies to 1.1 x 2.6 x 0.5 inches Case Only

E1 SERIES 1 WATT PROGRAMABLE REGULATED HV DC/DC CONVERTERS

OUTPUT VOLTAGES FROM 4100V TO 8000VDC

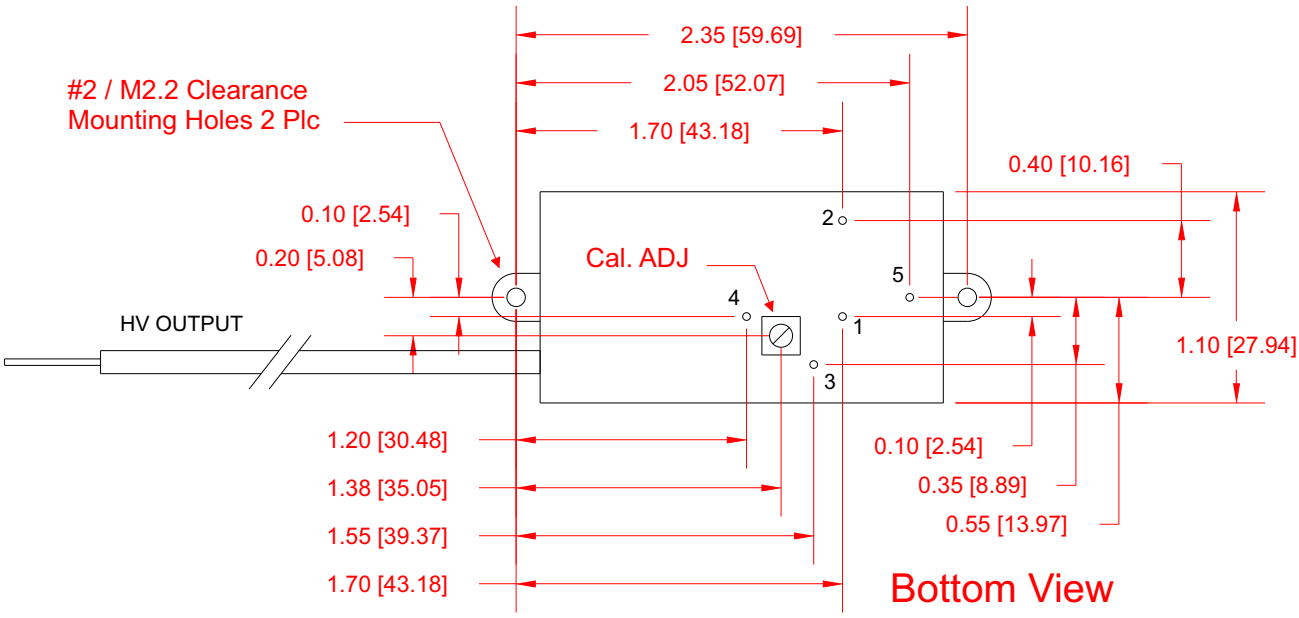

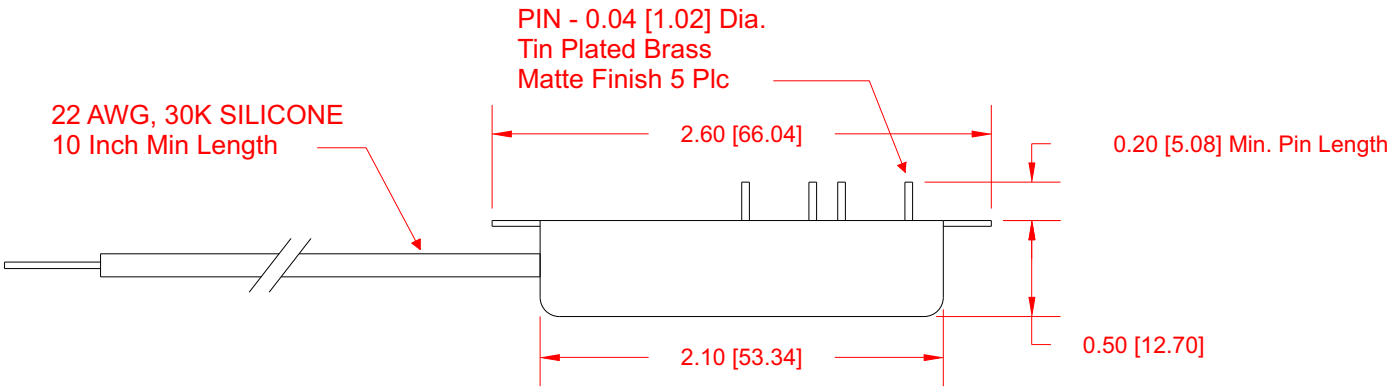

PIN #	FUNCTION
1	+ Input
2	Gnd
3	Control / Programming Voltage
4	HV Return
5	Case Gnd

Dimensions are in Inches
[Metric equivalents in brackets]

E1 SERIES 1 WATT PROGRAMABLE REGULATED HV DC/DC CONVERTERS

APPLICATION NOTES

INRUSH CURRENT

The inrush current of the E1 Series has been kept as low as possible. However, a series resistor may be inserted in the input line to limit this current further.

REVERSE INPUT PROTECTION

The E1 Series is equipped diode placed in series with the + Input (Pin 1) of the converter, this allows current to flow only if the correct polarity is applied.

SHORT CIRCUIT PROTECTION

The E1 Series is equipped with short circuit protection. The converter will fold-back the input power whenever a short circuit is applied to its output and automatically recover after the overload condition is removed.

RIPPLE AND NOISE

Figure below shows a typical output voltage ripple waveform, measured at full rated load current with no additional output filtering. External low ESR capacitors may be added across output to further reduce ripple.

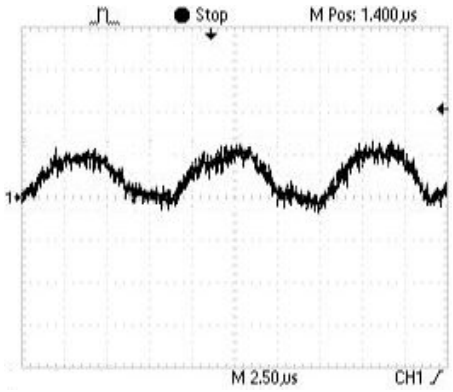

STARTUP TRANSIENT

Figure below shows a typical output voltage during turn-on, measured at no load current with no additional output filtering.

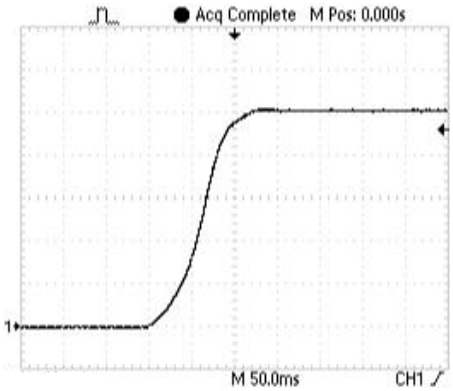

Figure below shows a typical output voltage during turn-on, measured at full rated load current with no additional output filtering.

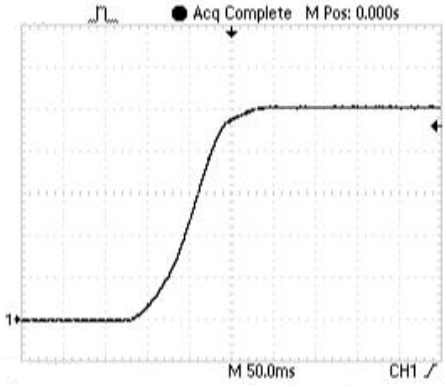

APPLICATION NOTES

LOAD TRANSIENT

Figure below shows a typical output voltage response, measured during a transition from full rated load current to no load current with no additional output filtering.

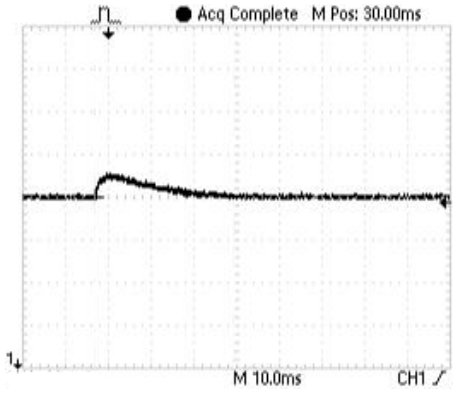

Figure below shows a typical output voltage response, measured during a transition from no load current to full rated load current with no additional output filtering.

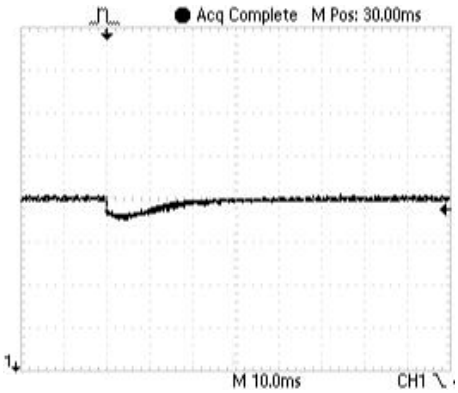

PROGRAMMING VOLTAGE

A 0V to +5V signal will program the power supply for 0 to 100% rated output voltage. The input impedance for this control pin is typically 100KΩ. If the programming signal exceeds 5.2Vdc the converter will shutdown and automatically recover when the programming signal returns to within normal operating range.

OUTPUT VOLTAGE TRACKING

The output voltage tracks the Control pin (Pin 3) within 0.5% from 5% to 100% of output voltage.

Figure below show a typical plot of both the actual and calculated output voltage as a function of control voltage.

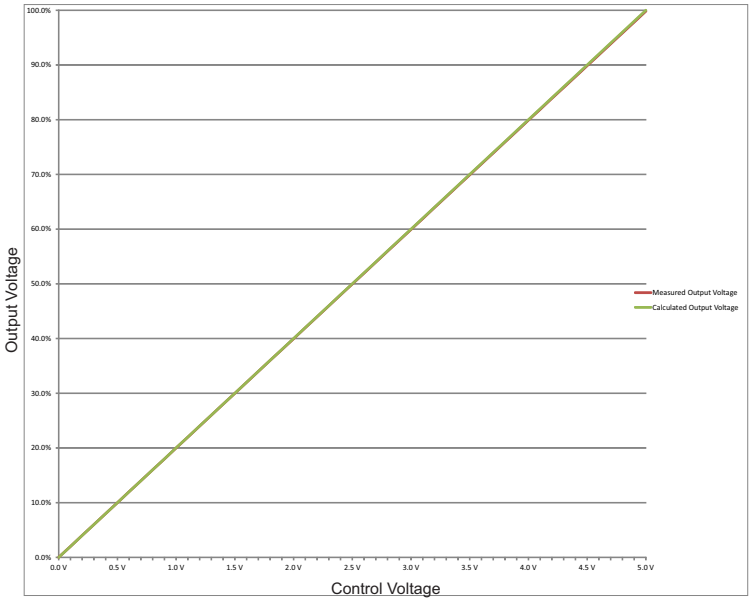

Operating Conditions:

Nominal Input Voltage = Fixed
Output Load = Resistive (fixed at full output current @ 100% output voltage)

E1 SERIES 1 WATT PROGRAMABLE REGULATED HV DC/DC CONVERTERS

APPLICATION NOTES

Connection Diagrams

The figures below show standard configurations for the E1 Series converter with output voltages up to 2kV.

Single Output Configuration

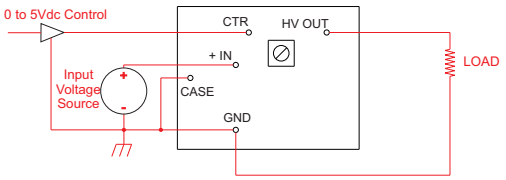

Dual Output Configuration

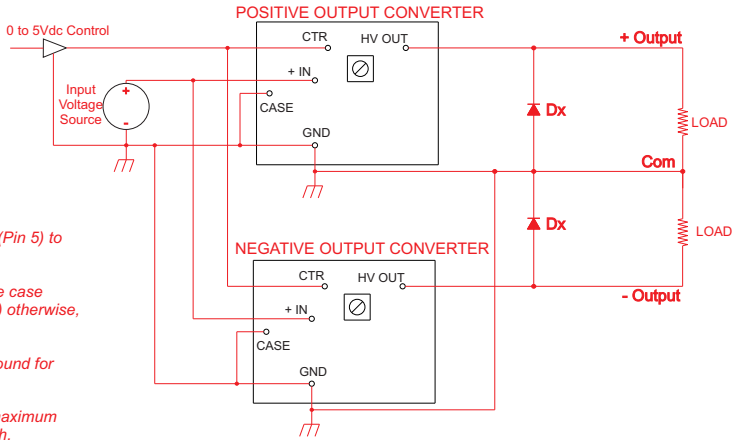

NOTE:

An internal RC network connects the Case (Pin 5) to Gnd (Pin 2).

No more than 50 volts potential between the case ground (Pin 5) and the circuit ground (Pin 2) otherwise, the supply may be permanently damaged .

Case pin (Pin 5) should be connected to ground for optimum operation.

The ratings of Dx should be 1.5 times the maximum current and voltage expected in each branch.

The figures below show standard configurations for the E1 Series converter with output voltages from 2.1kV to 4kV.

Single Output Configuration

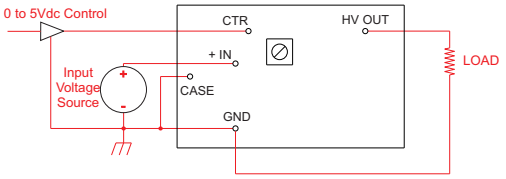

Dual Output Configuration

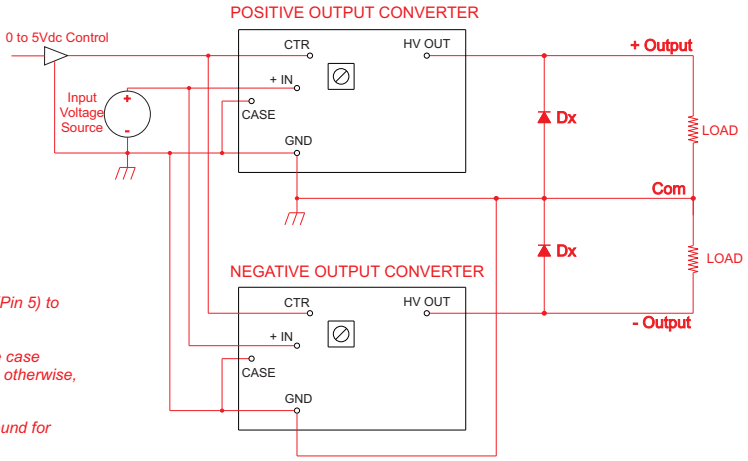

NOTE:

An internal RC network connects the Case (Pin 5) to Gnd (Pin 2).

No more than 50 volts potential between the case ground (Pin 5) and the circuit ground (Pin 2) otherwise, the supply may be permanently damaged .

Case pin (Pin 5) should be connected to ground for optimum operation.

The ratings of Dx should be 1.5 times the maximum current and voltage expected in each branch.

E1 SERIES 1 WATT PROGRAMABLE REGULATED HV DC/DC CONVERTERS

APPLICATION NOTES

Connection Diagrams

The figures below show standard configurations for the E1 Series converter with output voltages from 4.1kV to 8kV.

Single Output Configuration

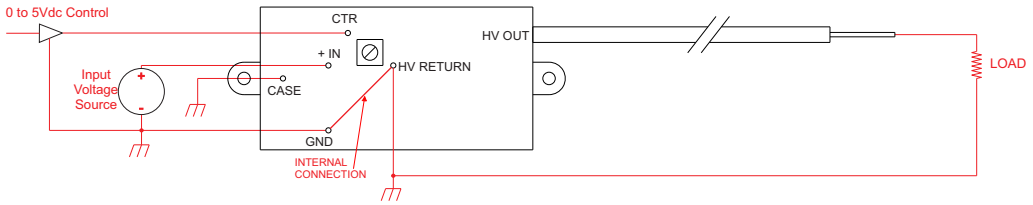

Dual Output Configuration

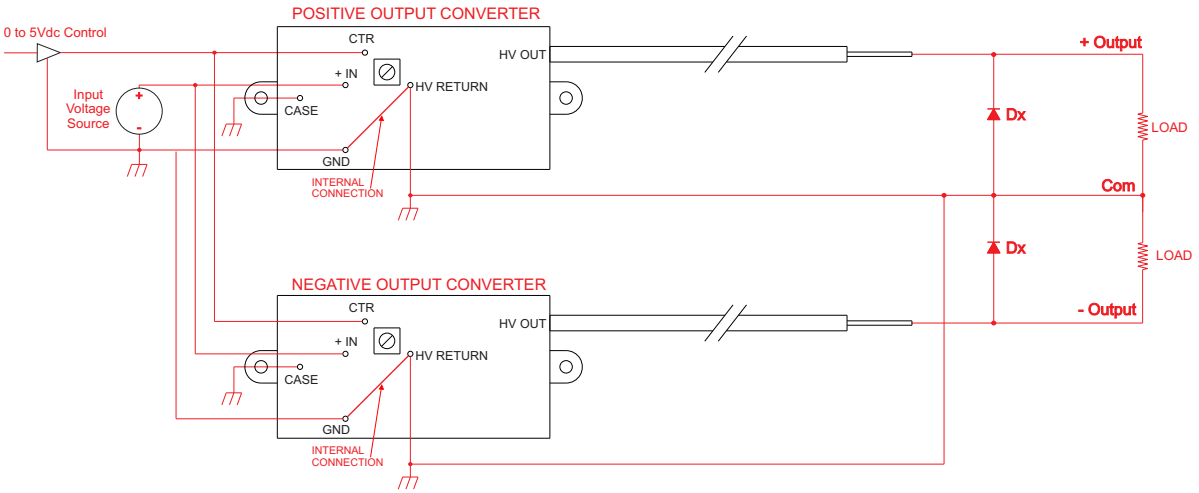

NOTE:

An internal RC network connects the Case (Pin 5) to Gnd (Pins 2 an 4).

No more than 50 volts potential between the case ground (Pin 5) and the circuit ground (Pins 2 and 4) otherwise, the supply may be permanently damaged .

Case pin (Pin 5) should be connected to ground for optimum operation.

The ratings of Dx should be 1.5 times the maximum current and voltage expected in each branch.

APPLICATION NOTES

CLEANING AGENTS

In order to avoid possible damage, any penetration of cleaning fluids must be prevented, since the power supplies are not hermetically sealed.

NUCLEAR AND MEDICAL APPLICATIONS

American Power Design products are not designed, intended for use in, or authorized for use as critical components in life support systems, equipment used in hazardous environments, or nuclear control systems without the express written consent of American Power Design, Inc.

TECHNICAL REVISIONS

The appearance of products, including safety agency certifications pictured on labels, may change depending on the date manufactured. Specifications are subject to change without notice.

SAFETY REQUIREMENTS

The converters are designed to meet North American and International safety regulatory requirements per UL 60950-1/CSA 22.2 No. 60950-1-07 Second Edition, IEC 60950-1: 2005, and EN 60950-1:2006. To comply with safety agencies requirements, an input line fuse must be used external to the converter. The table below provides the recommended fuse rating for use with this family of products.

Input Voltage Range	Fuse Rating
11.5-16Vdc	0.5A

If one input fuse is used for a group of modules, the maximum fuse rating should not exceed 10A.

WARRANTY

All products manufactured by American Power Design, Inc. (APD) are warranted to be free of defects due to material or workmanship for a period of one year from date of shipment. At our option, APD will repair or replace any non-conforming product.
APD expressly disclaims any liability for consequential or incidental damages resulting from the use or misuse of its products by the purchaser or others.
This warranty is in lieu of all warranties expressed or implied, including the warranties of merchantability. No other warranties, obligations, or liabilities are expressed or implied.
All products being returned for repair require a return material authorization(RMA) assigned by APD prior to return shipment.

American Power Design, Inc.

"The best high voltage design solution"

RoHS

E3 SERIES 3 WATT PROGRAMABLE REGULATED HV DC/DC CONVERTERS

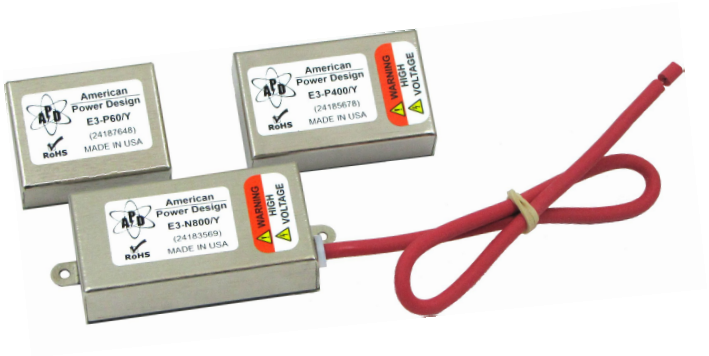

FEATURES

- Customer Selects Output Voltage
- Fully Regulated Outputs to + or - 8000 Vdc
- 0-100% Programable Output
- High Stability (<0.005%/°C)
- Low Output Noise & EMI/RFI
- External Calibration Adjustment
- Continuous Short Circuit Protection

The E3 Series miniature regulated high voltage DC/DC converter offers a 100% programable high voltage output using a 0-5Vdc analog signal. Their small size, low output ripple, and excellent regulation make them ideally suited for applications that demand a high degree of performance. All models will tolerate a short circuit indefinitely.

ELECTRICAL SPECIFICATIONS

Input Voltage Range	11.5V - 16Vdc
Output Voltage Accuracy	+/- 1%
Line Regulation	<0.05%
Load Regulation	<0.1%
Output Ripple	0.005% P-P
Programming Voltage	0 - 5Vdc @ <100uA
Programming Linearity (5% to 100% Vout)	<0.5%
Input Filter	Low ESR Capacitor
Reverse Input Protection	50Vdc
Short Circuit Protection	Continuous
Switching Frequency	180 - 250 kHz
Calibration Adjustment	5 to 10%
Response Time	<400 ms (Full Load, full scale response)
Programming Voltage Shutdown	> 5.2Vdc

GENERAL SPECIFICATIONS

Stability	< 0.01% / Hr.
Temp. Stability	+/- 0.005%/°C
Temp. (Operating , Case)	-10 to +60°C
Temp. (Storage)	-40 to +125°C
Humidity	0 to 95% (Non-Condensing)
Thermal Shock Limit	1°C / 10 Seconds
EMI/RFI	Six Sided Shield
Derating	None
Cooling	Free-Air Convection

PHYSICAL SPECIFICATIONS

Dimensions & Weight	1.1 x 1.4 x 0.5 inches @ 1.1 Oz
Dimensions & Weight	1.1 x 1.75 x 0.5 inches @ 1.3 Oz
Dimensions & Weight	1.1 x 2.6 x 0.5 inches @ 1.8 Oz
Case Material	Nickle Plated Metal *(With Non-Conductive Base Plate)*

Tel (888) 894-4446 WWW.APOWERDESIGN.COM Fax (603) 898-6534

E3 SERIES 3 WATT PROGRAMABLE REGULATED HV DC/DC CONVERTERS

OUTPUT VOLTAGES FROM 100V TO 2000VDC

REPRESENTATIVE MODEL LISTING

MODEL NUMBER		INPUT CURRENT		OUTPUT SPECIFICATIONS					SWITCHING FREQUENCY
Non-RoHs	RoHs	NO LOAD	FULL LOAD	VOLTAGE	RIPPLE	CURRENT	REGULATION LOAD	REGULATION LINE	
E3-P10	E3-P10/Y	<60 mA	<360 mA	0V to +100Vdc	<1% (1V p-p)	0 - 30mA	<0.1%	<0.1%	250 kHz
E3-N10	E3-N10/Y	<60 mA	<360 mA	0V to -100Vdc	<1% (1V p-p)	0 - 30mA	<0.1%	<0.1%	250 kHz
E3-P20	E3-P20/Y	<60 mA	<360 mA	0V to +200Vdc	<0.1% (0.2V p-p)	0 - 15mA	<0.1%	<0.1%	250 kHz
E3-N20	E3-N20/Y	<60 mA	<360 mA	0V to -200Vdc	<0.1% (0.2V p-p)	0 - 15mA	<0.1%	<0.1%	250 kHz
E3-P30	E3-P30/Y	<60 mA	<360 mA	0V to +300Vdc	<0.04% (0.12V p-p)	0 - 9.9mA	<0.1%	<0.1%	250 kHz
E3-N30	E3-N30/Y	<60 mA	<360 mA	0V to -300Vdc	<0.04% (0.12V p-p)	0 - 9.9mA	<0.1%	<0.1%	250 kHz
E3-P50	E3-P50/Y	<60 mA	<360 mA	0V to +500Vdc	<0.01% (50mV p-p)	0 - 6mA	<0.1%	<0.05%	250 kHz
E3-N50	E3-N50/Y	<60 mA	<360 mA	0V to -500Vdc	<0.01% (50mV p-p)	0 - 6mA	<0.1%	<0.05%	250 kHz
E3-P60	E3-P60/Y	<105 mA	<380 mA	0V to +600Vdc	<0.005% (30mV p-p)	0 - 5mA	<0.1%	<0.05%	200 kHz
E3-N60	E3-N60/Y	<105 mA	<380 mA	0V to -600Vdc	<0.005% (30mV p-p)	0 - 5mA	<0.1%	<0.05%	200 kHz
E3-P100	E3-P100/Y	<105 mA	<380 mA	0V to +1000Vdc	<0.005% (50mV p-p)	0 - 3mA	<0.1%	<0.05%	190 kHz
E3-N100	E3-N100/Y	<105 mA	<380 mA	0V to -1000Vdc	<0.005% (50mV p-p)	0 - 3mA	<0.1%	<0.05%	190 kHz
E3-P125	E3-P125/Y	<110 mA	<390 mA	0V to +1250Vdc	<0.005% (62mV p-p)	0 - 2.4mA	<0.1%	<0.05%	180 kHz
E3-N125	E3-N125/Y	<110 mA	<390 mA	0V to -1250Vdc	<0.005% (62mV p-p)	0 - 2.4mA	<0.1%	<0.05%	180 kHz
E3-P150	E3-P150/Y	<110 mA	<400 mA	0V to +1500Vdc	<0.005% (75mV p-p)	0 - 2mA	<0.1%	<0.05%	180 kHz
E3-N150	E3-N150/Y	<110 mA	<400 mA	0V to -1500Vdc	<0.005% (75mV p-p)	0 - 2mA	<0.1%	<0.05%	180 kHz
E3-P200	E3-P200/Y	<110 mA	<400 mA	0V to +2000Vdc	<0.005% (0.1V p-p)	0 - 1.5mA	<0.1%	<0.05%	180 kHz
E3-N200	E3-N200/Y	<110 mA	<400 mA	0V to -2000Vdc	<0.005% (0.1V p-p)	0 - 1.5 mA	<0.1%	<0.05%	180 kHz

E3-P100/Y

Product Family

Total Output Power

Positive/Negative Output

/Y RoHS Compliance

Customer Selects Output Voltage *

The E3 Series are designed such that the customer may order any output voltage (positive or negative) from 100Vdc to 2000Vdc at no additional charge.

ACTUAL OUTPUT VOLTAGE IS 10X

Output Voltage Restriction applies to 1.1 x 1.4 x 0.5 inch Case Only

E3 SERIES 3 WATT PROGRAMABLE REGULATED HV DC/DC CONVERTERS

OUTPUT VOLTAGES FROM 100V TO 2000VDC

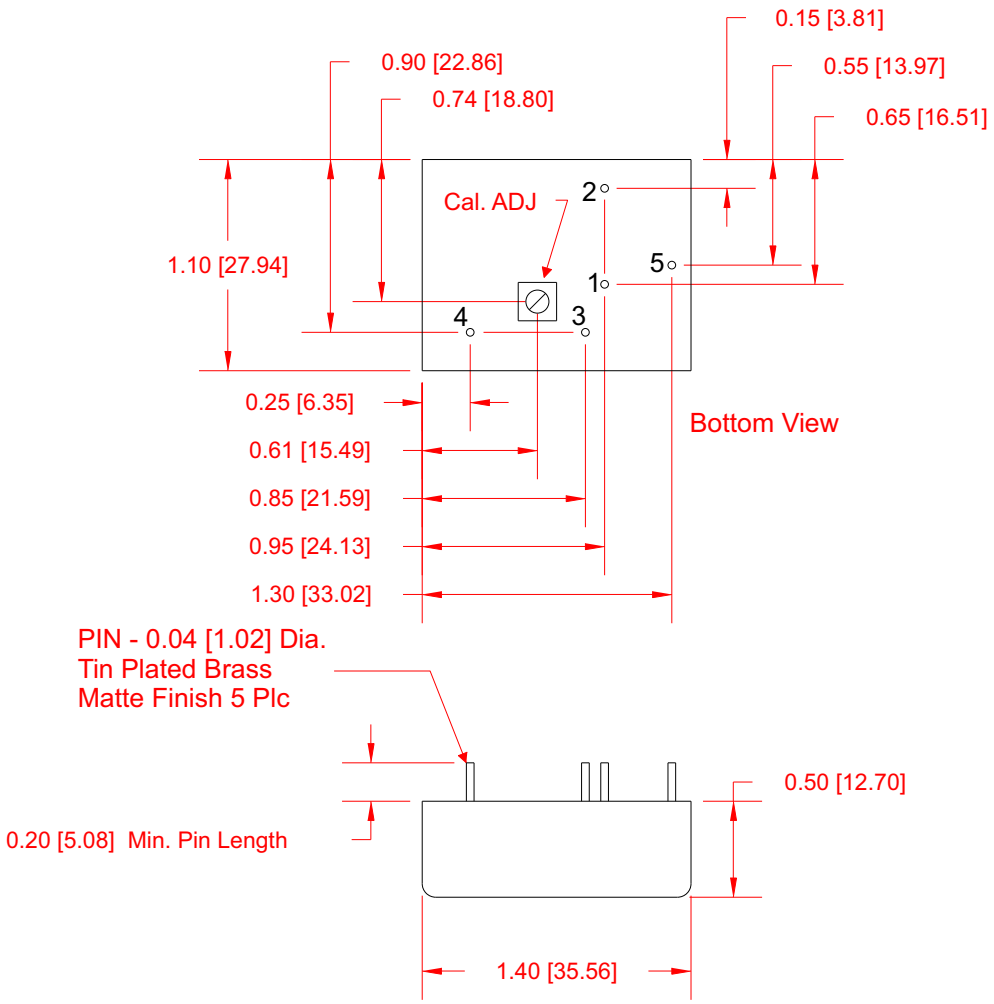

PIN #	FUNCTION
1	+ Input
2	Gnd
3	Control / Programming Voltage
4	HV Output
5	Case Gnd

Dimensions are in Inches
[Metric equivalents in brackets]

E3 SERIES 3 WATT PROGRAMABLE REGULATED HV DC/DC CONVERTERS

OUTPUT VOLTAGES FROM 2100V TO 4000VDC

REPRESENTATIVE MODEL LISTING									
MODEL NUMBER		INPUT CURRENT		OUTPUT SPECIFICATIONS					SWITCHING FREQUENCY
Non-RoHs	RoHs	NO LOAD	FULL LOAD	VOLTAGE	RIPPLE	CURRENT	REGULATION		
							LOAD	LINE	
E3-P250	E3-P250/Y	<140 mA	<410 mA	0V to +2500Vdc	<0.2% (5.0V p-p)	0 - 1.2mA	<0.1%	<0.05%	190 kHz
E3-N250	E3-N250/Y	<140 mA	<410 mA	0V to -2500Vdc	<0.2% (5.0V p-p)	0 - 1.2mA	<0.1%	<0.05%	190 kHz
E3-P300	E3-P300/Y	<140 mA	<410 mA	0V to +3000Vdc	<0.2% (6.0V p-p)	0 - 1mA	<0.1%	<0.05%	190 kHz
E3-N300	E3-N300/Y	<140mA	<410 mA	0V to -3000Vdc	<0.2% (6.0V p-p)	0 - 1mA	<0.1%	<0.05%	190 kHz
E3-P400	E3-P400/Y	<140 mA	<410 mA	0V to +4000Vdc	<0.1% (4.0V p-p)	0 - 0.75mA	<0.1%	<0.05%	190 kHz
E3-N400	E3-N400/Y	<140 mA	<410 mA	0V to -4000Vdc	<0.1% (4.0V p-p)	0 - 0.75mA	<0.1%	<0.05%	190 kHz

E3-P250/Y

Product Family

Total Output Power

Positive/Negative Output

/Y RoHS Compliance

Customer Selects Output Voltage *

The E3 Series are designed such that the customer may order any output voltage (positive or negative) from 2100Vdc to 4000Vdc at no additional charge.

****ACTUAL OUTPUT VOLTAGE IS 10X***

Output Voltage Restriction applies to 1.1 x 1.75 x 0.5 inches Case Only

E3 SERIES 3 WATT PROGRAMABLE REGULATED HV DC/DC CONVERTERS

OUTPUT VOLTAGES FROM 2100V TO 4000VDC

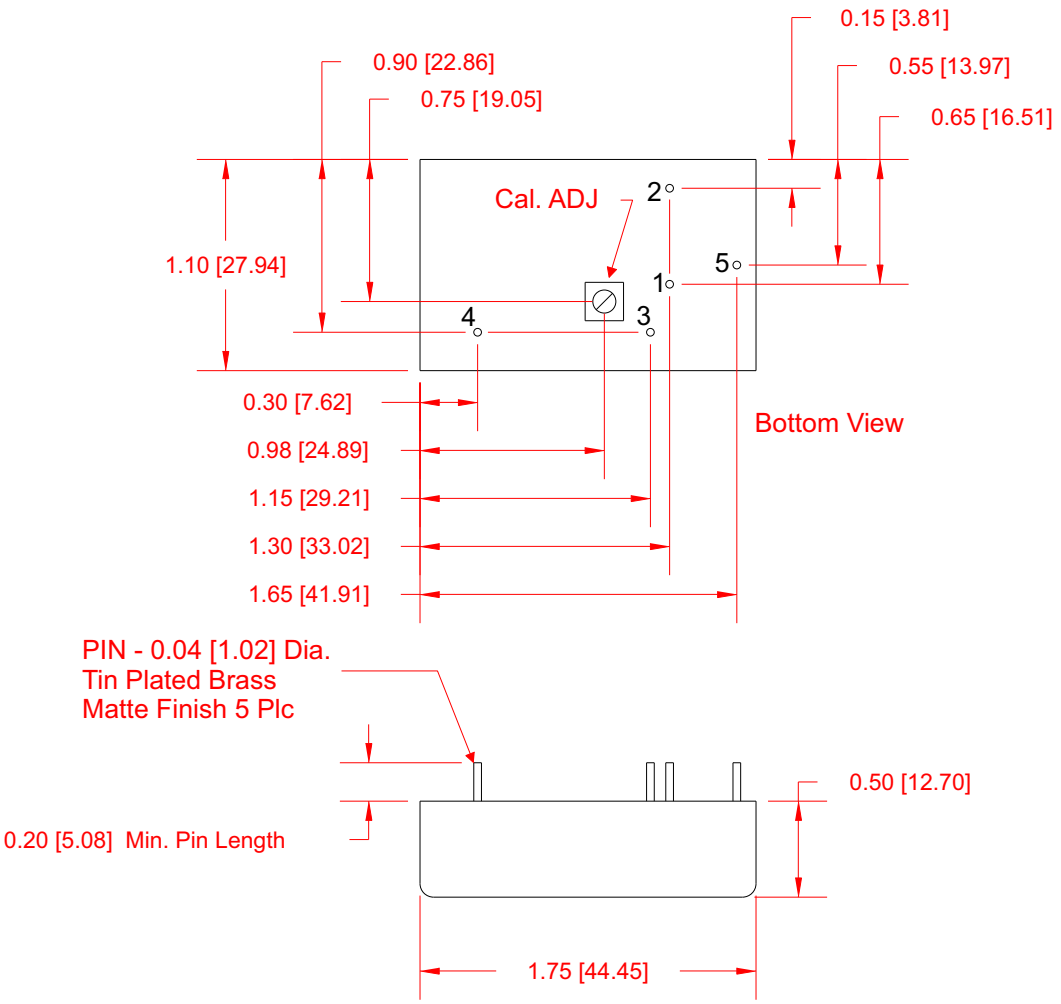

Dimensions are in Inches
[Metric equivalents in brackets]

PIN #	FUNCTION
1	+ Input
2	Gnd
3	Control / Programming Voltage
4	HV Output
5	Case Gnd

E3 SERIES 3 WATT PROGRAMABLE REGULATED HV DC/DC CONVERTERS

OUTPUT VOLTAGES FROM 4100V TO 8000VDC

REPRESENTATIVE MODEL LISTING									
MODEL NUMBER		INPUT CURRENT		OUTPUT SPECIFICATIONS					SWITCHING FREQUENCY
Non-RoHs	RoHs	NO LOAD	FULL LOAD	VOLTAGE	RIPPLE	CURRENT	REGULATION		
							LOAD	LINE	
E3-P500	E3-P500/Y	<150 mA	<420 mA	0V to +5000Vdc	<0.1% (5.0V p-p)	0 - 0.6mA	<0.1%	<0.05%	180 kHz
E3-N500	E3-N500/Y	<150 mA	<420 mA	0V to -5000Vdc	<0.1% (5.0V p-p)	0 - 0.6mA	<0.1%	<0.05%	180 kHz
E3-P600	E3-P600/Y	<150 mA	<420 mA	0V to +6000Vdc	<0.1% (6.0V p-p)	0 - 0.5mA	<0.1%	<0.05%	180 kHz
E3-N600	E3-N600/Y	<150 mA	<420 mA	0V to -6000Vdc	<0.1% (6.0V p-p)	0 - 0.5mA	<0.1%	<0.05%	180 kHz
E3-P800	E3-P800/Y	<150 mA	<420 mA	0V to +8000Vdc	<0.15% (12V p-p)	0 - 0.375mA	<0.1%	<0.05%	180 kHz
E3-N800	E3-N800/Y	<150 mA	<420 mA	0V to -8000Vdc	<0.15% (12V p-p)	0 - 0.375mA	<0.1%	<0.05%	180 kHz

E3-P800/Y

Product Family

Total Output Power

Positive/Negative Output

/Y RoHS Compliance

Customer Selects Output Voltage *

The E3 Series are designed such that the customer may order any output voltage (positive or negative) from 4100Vdc to 8000Vdc at no additional charge.

****ACTUAL OUTPUT VOLTAGE IS 10X***

Output Voltage Restriction applies to 1.1 x 2.6 x 0.5 inches Case Only

E3 SERIES 3 WATT PROGRAMABLE REGULATED HV DC/DC CONVERTERS

OUTPUT VOLTAGES FROM 4100V TO 8000VDC

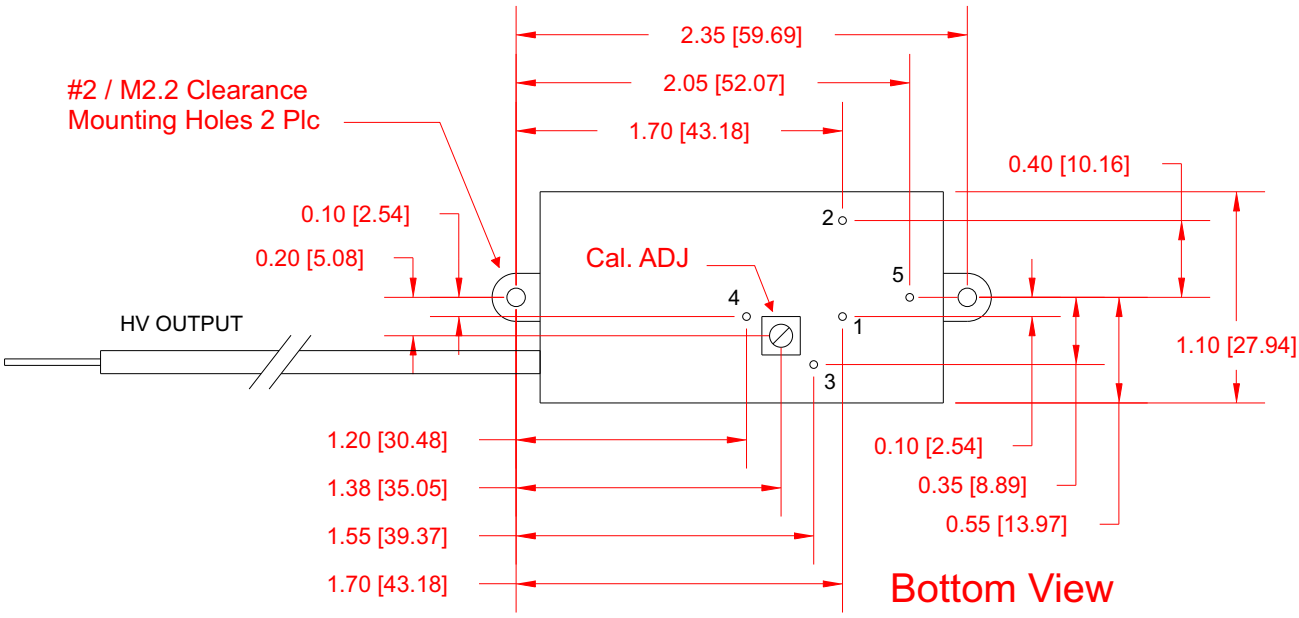

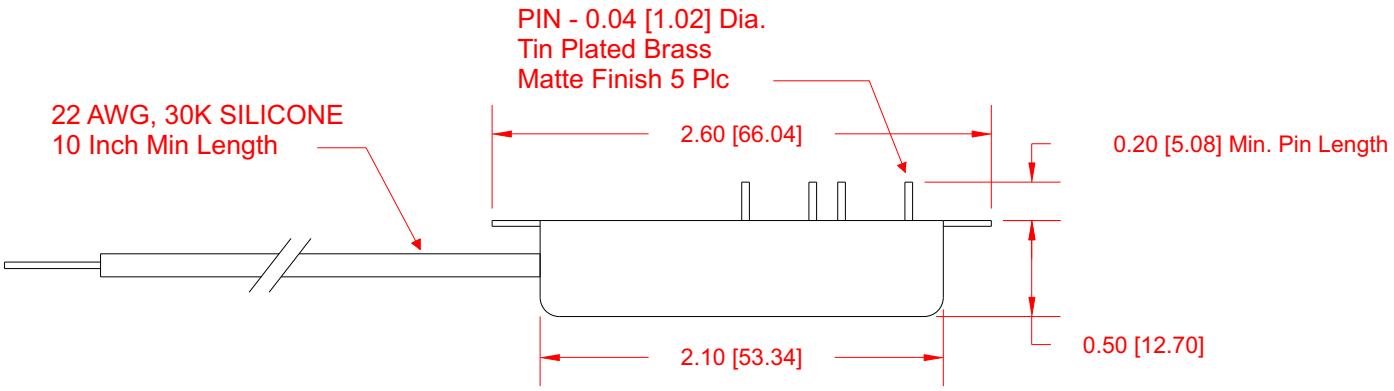

PIN #	FUNCTION
1	+ Input
2	Gnd
3	Control / Programming Voltage
4	HV Return
5	Case Gnd

Dimensions are in Inches
[Metric equivalents in brackets]

E3 SERIES 3 WATT PROGRAMABLE REGULATED HV DC/DC CONVERTERS

APPLICATION NOTES

INRUSH CURRENT

The inrush current of the E3 Series has been kept as low as possible. However, a series resistor may be inserted in the input line to limit this current further.

REVERSE INPUT PROTECTION

The E3 Series is equipped diode placed in series with the + Input (Pin 1) of the converter, this allows current to flow only if the correct polarity is applied.

SHORT CIRCUIT PROTECTION

The E3 Series is equipped with short circuit protection. The converter will fold-back the input power whenever a short circuit is applied to its output and automatically recover after the overload condition is removed.

RIPPLE AND NOISE

Figure below shows a typical output voltage ripple waveform, measured at full rated load current with no additional output filtering. External low ESR capacitors may be added across output to further reduce ripple.

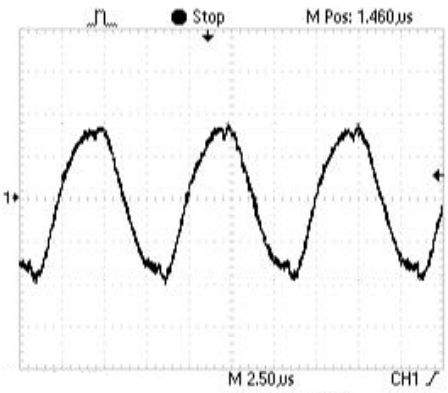

STARTUP TRANSIENT

Figure below shows a typical output voltage during turn-on, measured at no load current with no additional output filtering.

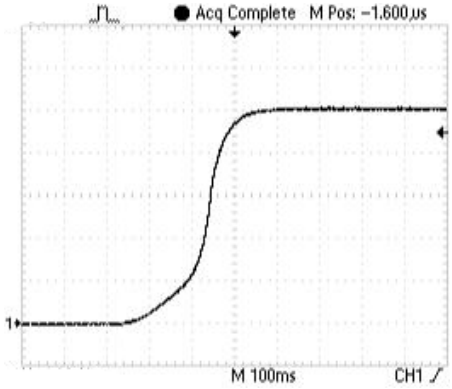

Figure below shows a typical output voltage during turn-on, measured at full rated load current with no additional output filtering.

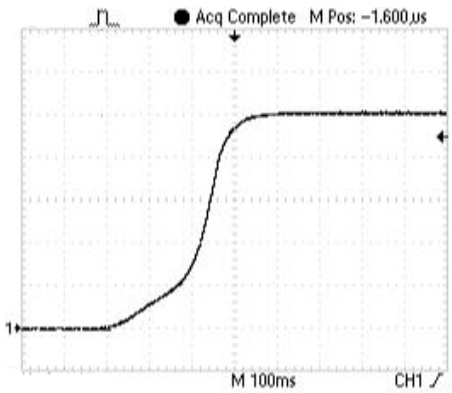

APPLICATION NOTES

LOAD TRANSIENT

Figure below shows a typical output voltage response, measured during a transition from full rated load current to no load current with no additional output filtering.

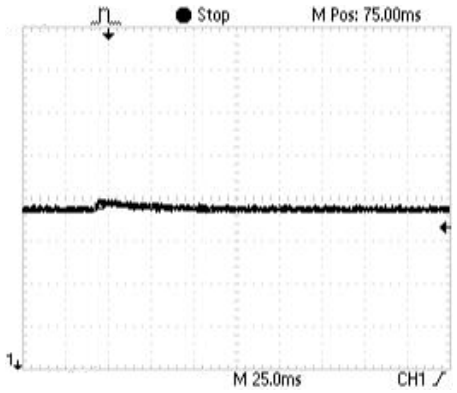

Figure below shows a typical output voltage response, measured during a transition from no load current to full rated load current with no additional output filtering.

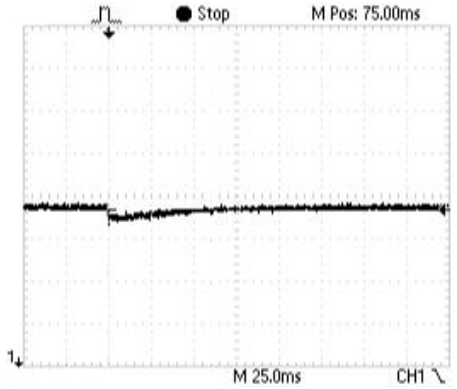

PROGRAMMING VOLTAGE

A 0V to +5V signal will program the power supply for 0 to 100% rated output voltage. The input impedance for this control pin is typically 100KΩ. If the programming signal exceeds 5.2Vdc the converter will shutdown and automatically recover when the programming signal returns to within normal operating range.

OUTPUT VOLTAGE TRACKING

The output voltage tracks the Control pin (Pin 3) within 0.5% from 5% to 100% of output voltage.

Figure below show a typical plot of both the actual and calculated output voltage as a function of control voltage.

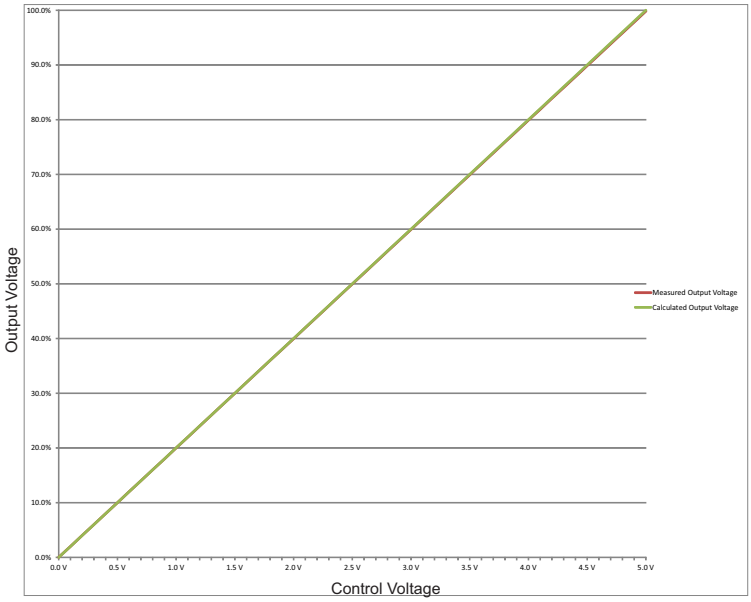

Operating Conditions:

Nominal Input Voltage = Fixed
Output Load = Resistive (fixed at full output current @ 100% output voltage)

APPLICATION NOTES

Connection Diagrams

The figure below shows how to connect The E3 Series converter with output voltages up to 2kV.

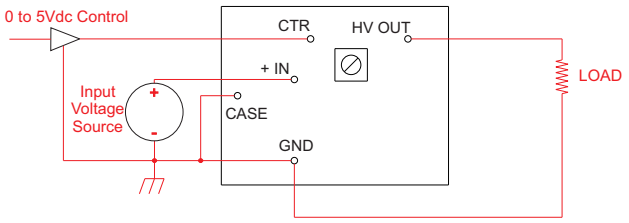

NOTE:

An internal RC network connects the Case (Pin 5) to Gnd (Pin 2).

No more than 50 volts potential between the case ground (Pin 5) and the circuit ground (Pin 2) otherwise, the supply may be permanently damaged .

Case pin (Pin 5) should be connected to ground for optimum operation.

The figure below shows how to connect The E3 Series converter with output voltages from 2.1kV to 4kV.

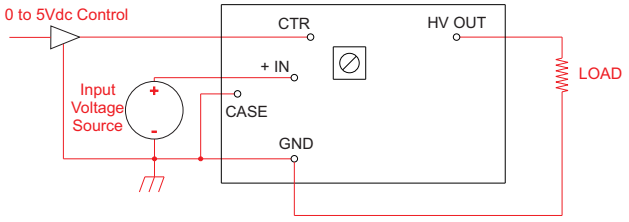

NOTE:

An internal RC network connects the Case (Pin 5) to Gnd (Pin 2).

No more than 50 volts potential between the case ground (Pin 5) and the circuit ground (Pin 2) otherwise, the supply may be permanently damaged .

Case pin (Pin 5) should be connected to ground for optimum operation.

The figure below shows how to connect The E3 Series converter with output voltages from 4.1kV to 8kV.

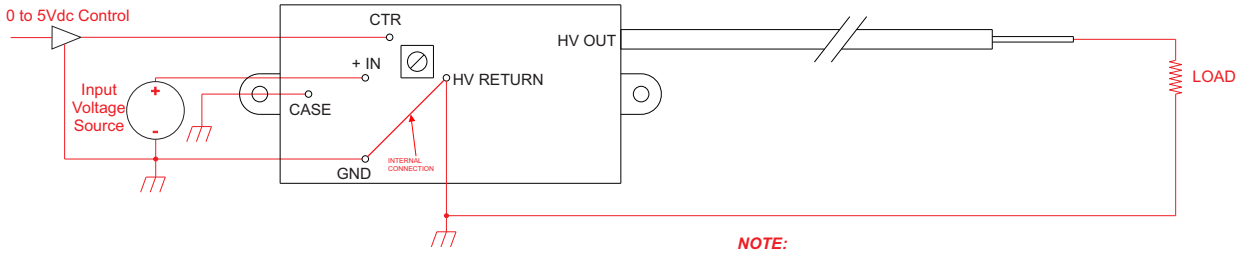

NOTE:

An internal RC network connects the Case (Pin 5) to Gnd (Pins 2 an 4).

No more than 50 volts potential between the case ground (Pin 5) and the circuit ground (Pins 2 and 4) otherwise, the supply may be permanently damaged .

Case pin (Pin 5) should be connected to ground for optimum operation.

APPLICATION NOTES

CLEANING AGENTS

In order to avoid possible damage, any penetration of cleaning fluids must be prevented, since the power supplies are not hermetically sealed.

NUCLEAR AND MEDICAL APPLICATIONS

American Power Design products are not designed, intended for use in, or authorized for use as critical components in life support systems, equipment used in hazardous environments, or nuclear control systems without the express written consent of American Power Design, Inc.

TECHNICAL REVISIONS

The appearance of products, including safety agency certifications pictured on labels, may change depending on the date manufactured. Specifications are subject to change without notice.

SAFETY REQUIREMENTS

The converters are designed to meet North American and International safety regulatory requirements per UL 60950-1/CSA 22.2 No. 60950-1-07 Second Edition, IEC 60950-1: 2005, and EN 60950-1:2006. To comply with safety agencies requirements, an input line fuse must be used external to the converter. The table below provides the recommended fuse rating for use with this family of products.

Input Voltage Range	Fuse Rating
11.5-16Vdc	1A

If one input fuse is used for a group of modules, the maximum fuse rating should not exceed 10A.

WARRANTY

All products manufactured by American Power Design, Inc. (APD) are warranted to be free of defects due to material or workmanship for a period of one year from date of shipment. At our option, APD will repair or replace any non-conforming product.
APD expressly disclaims any liability for consequential or incidental damages resulting from the use or misuse of its products by the purchaser or others.
This warranty is in lieu of all warranties expressed or implied, including the warranties of merchantability. No other warranties, obligations, or liabilities are expressed or implied.
All products being returned for repair require a return material authorization(RMA) assigned by APD prior to return shipment.

American Power Design, Inc.

"The best high voltage design solution"

RoHS

F1 SERIES 1 WATT PROGRAMABLE REGULATED HV DC/DC CONVERTERS

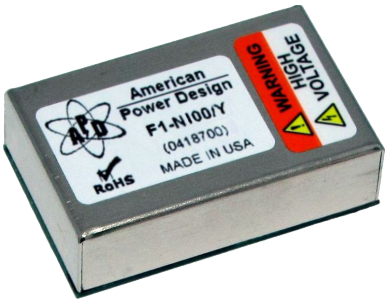

FEATURES

- Customer Selects Output Voltage
- Fully Regulated Outputs to + or - 2000 Vdc
- 0-100% Programable Output
- High Stability (<25ppm/°C)
- Onboard Precision Reference
- Output Voltage Monitor
- Low Output Noise & EMI/RFI
- External Calibration Adjustment
- Continuous Short Circuit Protection

The F1 Series miniature regulated high voltage DC/DC converter offers a 100% programable high voltage output. Output voltage monitor and onboard precision reference are standard. All models will tolerate a short circuit indefinitely.

ELECTRICAL SPECIFICATIONS

Input Voltage Range ..... 4.75V to 5.25Vdc / 11.5V to 15.5Vdc

Output Voltage Accuracy ..... < 1%

Line Regulation ..... <0.01%

Load Regulation ..... <0.05%

Output Ripple ..... <0.001% P-P

Onboard Precision Reference .....2.048Vdc / 5Vdc @ 1mA

Programming Voltage ..... 0 to 2.048Vdc / 0 to 5Vdc @ <100uA

Input Filter ..... Low ESR Capacitor

Reverse Input Protection 50Vdc

Short Circuit Protection ..... Continuous

Switching Frequency ..... 180 - 250 kHz

Calibration Adjustment ..... >1%

Programming Voltage Shutdown ..... >104%

Output Voltage Monitor ..... 0 to 2.048V / 0 to 5V = 0 to 100%

Programming Linearity (5% to 100% Vout) ..... <0.5%

GENERAL SPECIFICATIONS

Stability ..... < 50ppm / Hr.

Temp. Stability ..... < 25ppm/°C

Temp. (Operating , Case) ..... -55 to +70°C

Temp. (Storage) ..... -55 to +95°C

Humidity ..... 0 to 95% (Non-Condensing)

Thermal Shock Limit ..... 1°C / 10 Seconds

EMI/RFI ..... Six Sided Shield

Derating ..... None

Cooling ..... Free-Air Convection

PHYSICAL SPECIFICATIONS

Dimensions & Weight ..... 1.1 x 1.75 x 0.5 inches @ 1.3 Oz

Case Material ..... Nickle Plated Metal

(With Non-Conductive Base Plate)

NOTE: *Specifications are at the maximum rated output after a 30 minute warm-up period unless otherwise specified.*

Tel (888) 894-4446 WWW.APOWERDESIGN.COM Fax (603) 898-6534

F1 SERIES 1 WATT PROGRAMABLE REGULATED HV DC/DC CONVERTERS

5VDC INPUT MODELS

REPRESENTATIVE MODEL LISTING								
MODEL NUMBER		INPUT CURRENT		OUTPUT SPECIFICATIONS				
Non-RoHs	RoHs	NO LOAD	FULL LOAD	VOLTAGE	RIPPLE	CURRENT	REGULATION	
							LOAD	LINE
F15-P10	F15-P10/Y	<65 mA	<420 mA	0 to +100Vdc	<0.05% (50mV p-p)	0 - 10mA	<0.05%	<0.01%
F15-N10	F15-N10/Y	<65 mA	<420 mA	0 to -100Vdc	<0.05% (50mV p-p)	0 - 10mA	<0.05%	<0.01%
F15-P20	F15-P20/Y	<65 mA	<420 mA	0 to +200Vdc	<0.01% (10mV p-p)	0 - 5mA	<0.01%	<0.01%
F15-N20	F15-N20/Y	<65 mA	<420 mA	0 to -200Vdc	<0.01% (10mV p-p)	0 - 5mA	<0.005%	<0.003%
F15-P30	F15-P30/Y	<65 mA	<420 mA	0 to +300Vdc	<0.01% (30mV p-p)	0 - 3.3mA	<0.005%	<0.003%
F15-N30	F15-N30/Y	<65 mA	<420 mA	0 to -300Vdc	<0.01% (30mV p-p)	0 - 3.3mA	<0.005%	<0.003%
F15-P50	F15-P50/Y	<65 mA	<420 mA	0 to +500Vdc	<0.005% (25mV p-p)	0 - 2mA	<0.003%	<0.002%
F15-N50	F15-N50/Y	<65 mA	<420 mA	0 to -500Vdc	<0.005% (25mV p-p)	0 - 2mA	<0.005%	<0.002%
F15-P60	F15-P60/Y	<65 mA	<420 mA	0 to +600Vdc	<0.005% (30mV p-p)	0 - 1.67mA	<0.005%	<0.002%
F15-N60	F15-N60/Y	<65 mA	<420 mA	0 to -600Vdc	<0.005% (30mV p-p)	0 - 1.67mA	<0.005%	<0.002%
F15-P100	F15-P100/Y	<65 mA	<420 mA	0 to +1000Vdc	<0.001% (10mV p-p)	0 - 1mA	<0.005%	<0.001%
F15-N100	F15-N100/Y	<65 mA	<420 mA	0 to -1000Vdc	<0.001% (10mV p-p)	0 - 1mA	<0.005%	<0.001%
F15-P125	F15-P125/Y	<65 mA	<420 mA	0 to +1250Vdc	<0.001% (12mV p-p)	0 - 0.8mA	<0.005%	<0.001%
F15-N125	F15-N125/Y	<65 mA	<420 mA	0 to -1250Vdc	<0.001% (12mV p-p)	0 - 0.8mA	<0.005%	<0.001%
F15-P150	F15-P150/Y	<155 mA	<550 mA	0 to +1500Vdc	<0.001% (15mV p-p)	0 - 0.67mA	<0.005%	<0.001%
F15-N150	F15-N150/Y	<155 mA	<550 mA	0 to -1500Vdc	<0.001% (15mV p-p)	0 - 0.67mA	<0.005%	<0.001%
F15-P200	F15-P200/Y	<155 mA	<550 mA	0 to +2000Vdc	<0.001% (20mV p-p)	0 - 0.5mA	<0.005%	<0.003%
F15-N200	F15-N200/Y	<155 mA	<550 mA	0 to -2000Vdc	<0.001% (20mV p-p)	0 - 0.5 mA	<0.001%	<0.001%

F1 SERIES 1 WATT PROGRAMABLE REGULATED HV DC/DC CONVERTERS

12VDC INPUT MODELS

REPRESENTATIVE MODEL LISTING								
MODEL NUMBER		INPUT CURRENT		OUTPUT SPECIFICATIONS				
Non-RoHs	RoHs	NO LOAD	FULL LOAD	VOLTAGE	RIPPLE	CURRENT	REGULATION	
							LOAD	LINE
F112-P10	F112-P10/Y	<80 mA	<220 mA	0 to +100Vdc	<0.05% (50mV p-p)	0 - 10mA	<0.05%	<0.01%
F112-N10	F112-N10/Y	<80 mA	<220 mA	0 to -100Vdc	<0.05% (50mV p-p)	0 - 10mA	<0.05%	<0.01%
F112-P20	F112-P20/Y	<80 mA	<220 mA	0 to +200Vdc	<0.01% (10mV p-p)	0 - 5mA	<0.05%	<0.01%
F112-N20	F112-N20/Y	<80 mA	<220 mA	0 to -200Vdc	<0.01% (10mV p-p)	0 - 5mA	<0.05%	<0.01%
F112-P30	F112-P30/Y	<80 mA	<220 mA	0 to +300Vdc	<0.01% (30mV p-p)	0 - 3.3mA	<0.05%	<0.01%
F112-N30	F112-N30/Y	<80 mA	<220 mA	0 to -300Vdc	<0.01% (30mV p-p)	0 - 3.3mA	<0.05%	<0.01%
F112-P50	F112-P50/Y	<80 mA	<220 mA	0 to +500Vdc	<0.01% (50mV p-p)	0 - 2mA	<0.01%	<0.01%
F112-N50	F112-N50/Y	<80 mA	<220 mA	0 to -500Vdc	<0.01% (50mV p-p)	0 - 2mA	<0.01%	<0.01%
F112-P60	F112-P60/Y	<80 mA	<220 mA	0 to +600Vdc	<0.01% (60mV p-p)	0 - 1.67mA	<0.01%	<0.01%
F112-N60	F112-N60/Y	<80 mA	<220 mA	0 to -600Vdc	<0.01% (60mV p-p)	0 - 1.67mA	<0.01%	<0.01%
F112-P100	F112-P100/Y	<80 mA	<220 mA	0 to +1000Vdc	<0.001% (10mV p-p)	0 - 1mA	<0.005%	<0.001%
F112-N100	F112-N100/Y	<80 mA	<220 mA	0 to -1000Vdc	<0.001% (10mV p-p)	0 - 1mA	<0.005%	<0.001%
F112-P125	F112-P125/Y	<80 mA	<220 mA	0 to +1250Vdc	<0.0005% (6mV p-p)	0 - 0.8mA	<0.005%	<0.001%
F112-N125	F112-N125/Y	<80 mA	<220 mA	0 to -1250Vdc	<0.0005% (6mV p-p)	0 - 0.8mA	<0.005%	<0.001%
F112-P150	F112-P150/Y	<100 mA	<220 mA	0 to +1500Vdc	<0.001% (15mV p-p)	0 - 0.67mA	<0.01%	<0.01%
F112-N150	F112-N150/Y	<100 mA	<220 mA	0 to -1500Vdc	<0.001% (15mV p-p)	0 - 0.67mA	<0.01%	<0.01%
F112-P200	F112-P200/Y	<100 mA	<220 mA	0 to +2000Vdc	<0.001% (20mV p-p)	0 - 0.5mA	<0.01%	<0.01%
F112-N200	F112-N200/Y	<100 mA	<220 mA	0 to -2000Vdc	<0.001% (20mV p-p)	0 - 0.5 mA	<0.01%	<0.01%

F15-P100/Y

Product Family

Total Output Power

Input Voltage

Positive/Negative Output

/Y RoHS Compliance

Customer Selects Output Voltage *

The F1 Series are designed such that the customer may order any output voltage (positive or negative) from 100Vdc to 2000Vdc at no additional charge.

****ACTUAL OUTPUT VOLTAGE IS 10X***

F1 SERIES 1 WATT PROGRAMABLE REGULATED HV DC/DC CONVERTERS

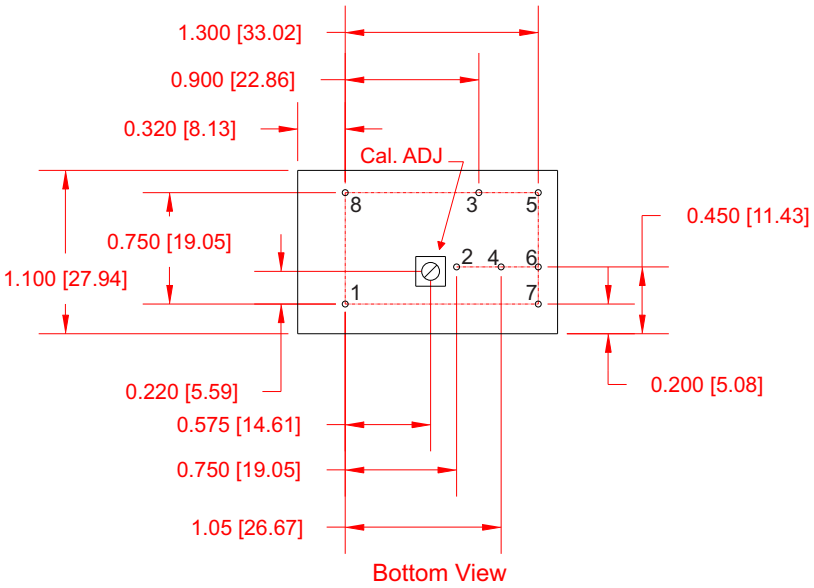

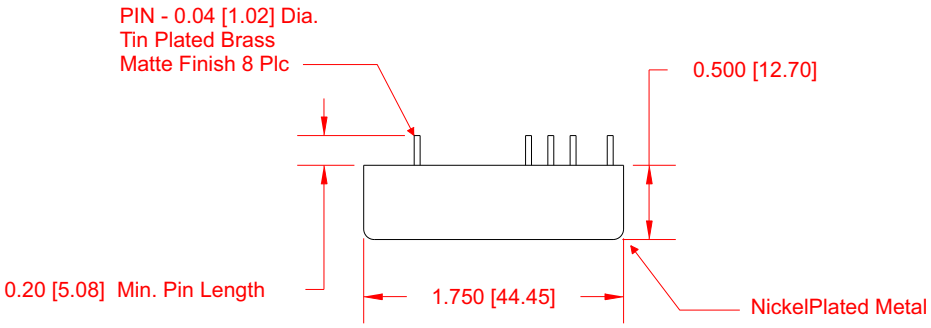

PIN #	FUNCTION
1	HV Output
2	Control/ Programming Voltage
3	Gnd
4	Reference Voltage
5	Case Gnd
6	+ Input
7	Output Voltage Monitor
8	HV Return

Dimensions are in Inches
[Metric equivalents in brackets]

F1 SERIES 1 WATT PROGRAMABLE REGULATED HV DC/DC CONVERTERS

APPLICATION NOTES

INRUSH CURRENT

The inrush current of the F1 Series has been kept as low as possible. However, a series resistor may be inserted in the input line to limit this current further.

REVERSE INPUT PROTECTION

The F1 Series is equipped diode placed in series with the + Input (Pin 6) of the converter, this allows current to flow only if the correct polarity is applied.

SHORT CIRCUIT PROTECTION

The F1 Series is equipped with short circuit protection. The converter will fold-back the input power whenever a short circuit is applied to its output and automatically recover after the overload condition is removed.

CALIBRATION ADJUSTMENT

The F1 Series is equipped with an accessible potentiometer allowing for calibration after instillation.

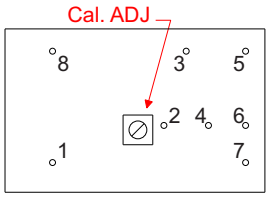

Bottom View

STARTUP TRANSIENT

Figure below shows a typical output voltage during turn-on, measured at no load current with no additional output filtering.

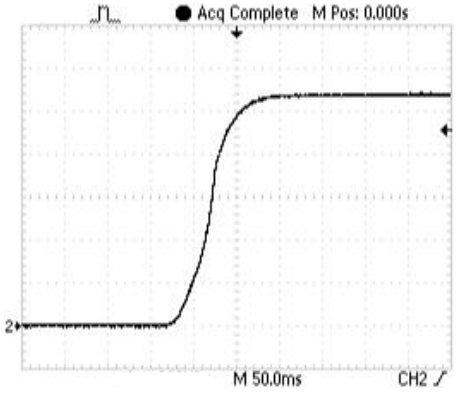

Figure below shows a typical output voltage during turn-on, measured at full rated load current with no additional output filtering.

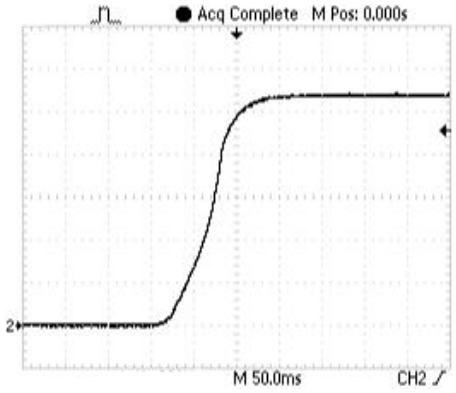

NOTE:

Input power should be applied at least 100msec prior to sending a voltage programming command.

F1 SERIES 1 WATT PROGRAMABLE REGULATED HV DC/DC CONVERTERS

APPLICATION NOTES

OVER VOLTAGE PROGRAMMING

The F1 Series is equipped with an over voltage programming circuit designed to protect the output voltage from exceeding its maximum rating.

If the programming signal exceeds the reference voltage by more than 104% the converter will automatically shutdown and automatically recover when the programming signal returns to within normal operating range.

RIPPLE AND NOISE

Figure below shows a typical output voltage ripple waveform, measured at full rated load current with no additional output filtering. External low ESR capacitors may be added across output to further reduce ripple.

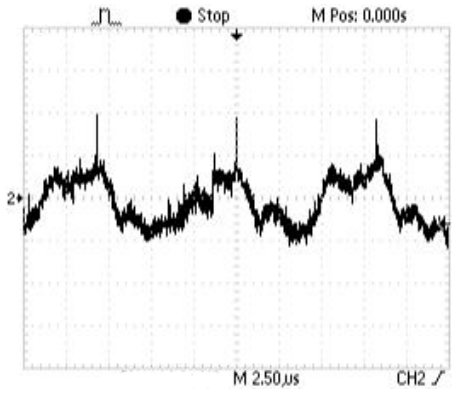

LOAD TRANSIENT

Figure below shows a typical output voltage response, measured during a transition from full rated load current to no load current with no additional output filtering.

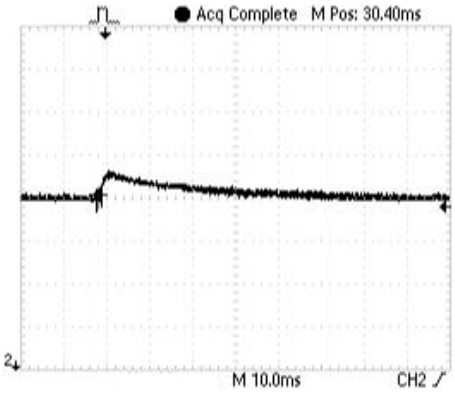

Figure below shows a typical output voltage response, measured during a transition from no load current to full rated load current with no additional output filtering.

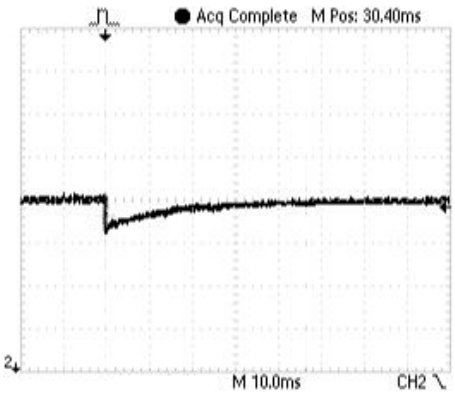

F1 SERIES 1 WATT PROGRAMABLE REGULATED HV DC/DC CONVERTERS

PRECISION ON-BOARD REFERENCE

The F1 is equipped with an on-board precision reference circuit (Pin 4) capable of suppling up to 1mA of current. The precision, on board reference can be used in conjunction with an external potentiometer or voltage divider to program the high voltage output.

The Figure below shows how to connect an external Trim Pot.

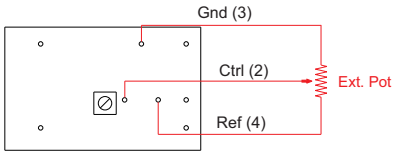

NOTE:

2.048Vdc Reference = 5k 20 Turn Trim Pot

5Vdc Reference = 10k 20 Turn Trim Pot

OUTPUT VOLTAGE MONITOR

The F1 is equipped with an output voltage monitor circuit (Pin 7). The voltage monitor is internally buffered to provide a low impedance (up to 1 mA) signal to external circuitry.

5V Input Models: 0 to 2.048Vdc = 0 to 100% VOUT

12V Input Models: 0 to 5Vdc = 0 to 100% VOUT

PROGRAMMING VOLTAGE

A control signal from 0 to 100% will program the power supply for 0 to 100% rated output voltage. The input impedance for this control pin (Pin 2) is typically 100KΩ.

OUTPUT VOLTAGE TRACKING

The output voltage tracks the Control pin (Pin 2) within 0.5% from 5% to 100% of output voltage.

Figure below show a typical plot of both the actual and calculated output voltage as a function of control voltage.

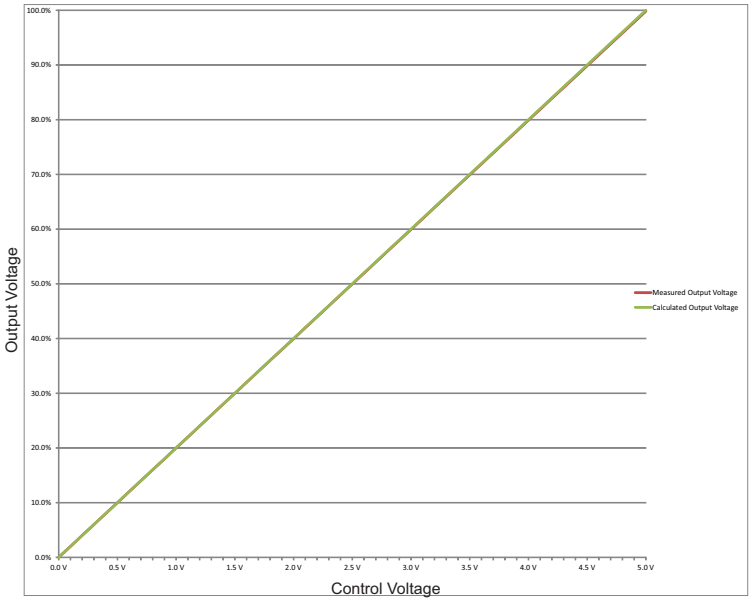

Operating Conditions:

Nominal Input Voltage = Fixed
Output Load = Resistive (fixed at full output current @ 100% output voltage)

APPLICATION NOTES

EXTERNAL / REMOTE POTENTIOMETER

The output voltage of the F1 Series can be controlled with and external or remote potentiometer .

Figures below shows the typical connections needed.

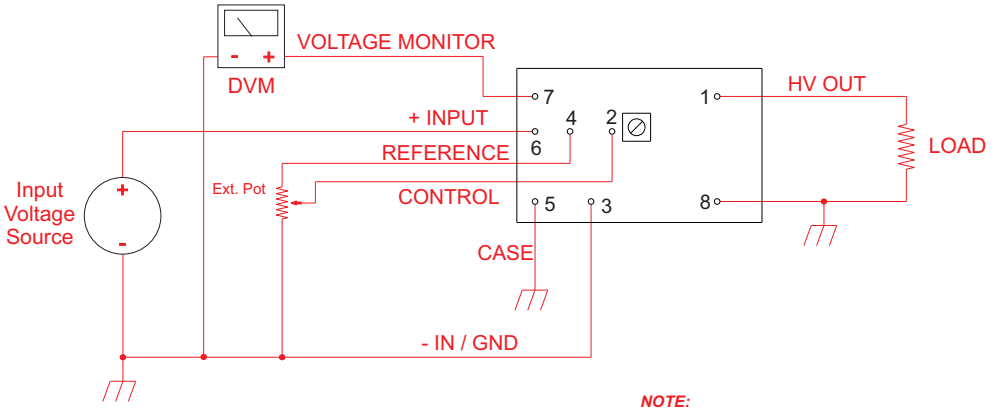

NOTE:

Output voltage monitor polarity is positive regardless of output voltage polarity.

EXTERNAL / REMOTE VOLTAGE SOURCE

The output voltage of the F1 Series can be controlled with an external or remote voltage source .

Figures below shows the typical connections needed.

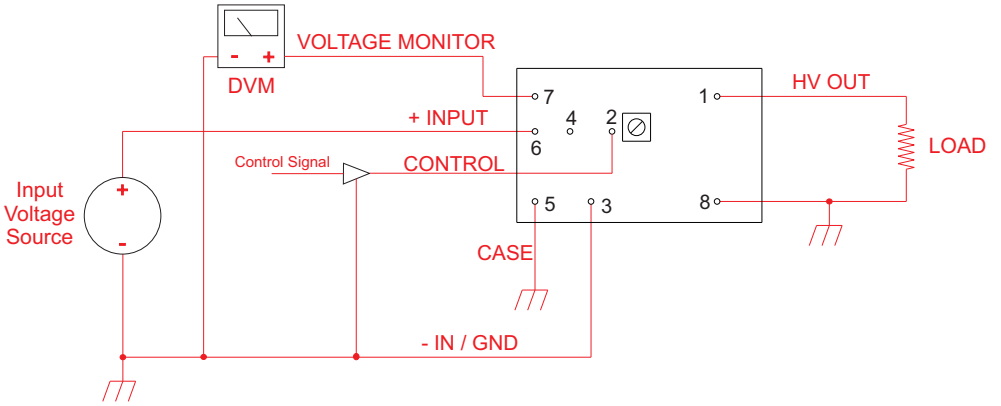

NOTE:

Output voltage monitor polarity is positive regardless of output voltage polarity.

APPLICATION NOTES

CLEANING AGENTS

In order to avoid possible damage, any penetration of cleaning fluids must be prevented, since the power supplies are not hermetically sealed.

TECHNICAL REVISIONS

The appearance of products, including safety agency certifications pictured on labels, may change depending on the date manufactured. Specifications are subject to change without notice.

NUCLEAR AND MEDICAL APPLICATIONS

American Power Design products are not designed, intended for use in, or authorized for use as critical components in life support systems, equipment used in hazardous environments, or nuclear control systems without the express written consent of American Power Design, Inc.

SAFETY REQUIREMENTS

The converters are designed to meet North American and International safety regulatory requirements per UL 60950-1/CSA 22.2 No. 60950-1-07 Second Edition, IEC 60950-1: 2005, and EN 60950-1:2006. To comply with safety agencies requirements, an input line fuse must be used external to the converter. The table below provides the recommended fuse rating for use with this family of products.

Input Voltage Range	Fuse Rating
5Vdc	1A
12Vdc	0.5A

If one input fuse is used for a group of modules, the maximum fuse rating should not exceed 10A.

WARRANTY

All products manufactured by American Power Design, Inc. (APD) are warranted to be free of defects due to material or workmanship for a period of one year from date of shipment. At our option, APD will repair or replace any non-conforming product.
APD expressly disclaims any liability for consequential or incidental damages resulting from the use or misuse of its products by the purchaser or others.
This warranty is in lieu of all warranties expressed or implied, including the warranties of merchantability. No other warranties, obligations, or liabilities are expressed or implied.
All products being returned for repair require a return material authorization(RMA) assigned by APD prior to return shipment.

American Power Design, Inc.

"The best high voltage design solution"

RoHS

G10 SERIES 10 WATT PROGRAMABLE REGULATED HV DC/DC CONVERTER

FEATURES

- Customer Selects Output Voltage
- Fully Regulated Outputs to + or - 20,000 Vdc
- 0-100% Programable Output
- Output Voltage Monitor
- High Stability (<0.005%/°C)
- Low Output Noise & EMI/RFI
- Onboard 10V Precision Reference
- Continuous Short Circuit Protection

The G10 Series regulated high voltage DC/DC converter offers a 100% programable high voltage output using a 0-10Vdc analog signal. Ideally suited for CRT's, lasers, Q switches, PMT's, detectors, electron and ion guns, capacitor charging, test equipment, and many other applications. Remote on/off, output voltage monitor and 10V precision reference are standard. All models will tolerate a short circuit indefinitely.

ELECTRICAL SPECIFICATIONS

Input Voltage Range	22.8V - 28.8Vdc
Output Voltage Accuracy	< 1.5%
Line Regulation	<0.1%
Load Regulation	<0.2%
Output Ripple	< 0.1% P-P
Onboard Precision Reference	10Vdc @ 1mA
Programming Voltage	0 - 10Vdc @ <100uA
Programming Linearity (5% to 100% Vout)	<0.5%
Input Filter	Low ESR Capacitor
Reverse Input Protection	30A @ 5mS (Shunt)
Short Circuit Protection	Continuous
Switching Frequency	180 - 250 kHz
Response Time	<900 ms (Full Load, full scale response)
Programming Voltage Shutdown	> 10.2Vdc
Output Voltage Monitor	0 to 10 V = 0 to 100%
On/Off	ON=N.C. or 0Vdc / OFF=5Vdc

GENERAL SPECIFICATIONS

Stability	< 0.01% / Hr.
Temp. Stability	+/- 0.005%/°C
Temp. (Operating , Case)	-10 to +60°C
Temp. (Storage)	-40 to +125°C
Humidity	0 to 95% (Non-Condensing)
Thermal Shock Limit	1°C / 10 Seconds
EMI/RFI	Six Sided Shield
Derating	None
Cooling	Free-Air Convection

PHYSICAL SPECIFICATIONS

Dimensions	3.1 x 4.1 x 1.4 inches
Weight	18.6 Oz
Case Material	Blank Anodized Aluminum

American Power Design, Inc.

"The best high voltage design solution"

RoHS

G10 SERIES 10 WATT PROGRAMABLE REGULATED HV DC/DC CONVERTER

REPRESENTATIVE MODEL LISTING								
MODEL NUMBER		INPUT CURRENT		OUTPUT SPECIFICATIONS				
Non-RoHs	RoHs	NO LOAD	FULL LOAD	VOLTAGE	RIPPLE	CURRENT	REGULATION	
							LOAD	LINE
G10-P10	G10-P10/Y	<90 mA	<650 mA	0V to +100Vdc	<0.1% (100mV p-p)	0 - 100mA	<0.2%	<0.1%
G10-N10	G10-N10/Y	<90 mA	<650 mA	0V to -100Vdc	<0.1% (100mV p-p)	0 - 100mA	<0.2%	<0.1%
G10-P50	G10-P50/Y	<90 mA	<650 mA	0V to +500Vdc	<0.1% (500mV p-p)	0 - 20mA	<0.2%	<0.1%
G10-N50	G10-N50/Y	<90 mA	<650 mA	0V to -500Vdc	<0.1% (500mV p-p)	0 - 20mA	<0.2%	<0.1%
G10-P100	G10-P100/Y	<90 mA	<650 mA	0V to +1000Vdc	<0.1% (1V p-p)	0 - 10mA	<0.2%	<0.1%
G10-N100	G10-N100/Y	<90 mA	<650 mA	0V to -1000Vdc	<0.1% (1V p-p)	0 - 10mA	<0.2%	<0.1%
G10-P200	G10-P200/Y	<90 mA	<700 mA	0V to +2000Vdc	<0.1% (2V p-p)	0 - 5mA	<0.2%	<0.1%
G10-N200	G10-N200/Y	<90 mA	<700 mA	0V to -2000Vdc	<0.1% (2V p-p)	0 - 5mA	<0.2%	<0.1%
G10-P300	G10-P300/Y	<100 mA	<700 mA	0V to +3000Vdc	<0.1% (3V p-p)	0 - 3.3mA	<0.2%	<0.1%
G10-N300	G10-N300/Y	<100 mA	<700 mA	0V to -3000Vdc	<0.1% (3V p-p)	0 - 3.3mA	<0.2%	<0.1%
G10-P500	G10-P500/Y	<100 mA	<700 mA	0V to +5000Vdc	<0.1% (5V p-p)	0 - 2mA	<0.2%	<0.1%
G10-N500	G10-N500/Y	<100 mA	<700 mA	0V to -5000Vdc	<0.1% (5V p-p)	0 - 2mA	<0.2%	<0.1%
G10-P700	G10-P700/Y	<110 mA	<700 mA	0V to +7000Vdc	<0.1% (7V p-p)	0 - 1.4mA	<0.2%	<0.1%
G10-N700	G10-N700/Y	<110 mA	<700 mA	0V to -7000Vdc	<0.1% (7V p-p)	0 - 1.4mA	<0.2%	<0.1%
G10-P1000	G10-P1000/Y	<120 m A	<700 mA	0V to +10000Vdc	<0.1% (10V p-p)	0 - 1mA	<0.2%	<0.1%
G10-N1000	G10-N1000/Y	<120 mA	<700 mA	0V to -10000Vdc	<0.1% (10V p-p)	0 - 1mA	<0.2%	<0.1%
G10-P1200	G10-P1200/Y	<150 mA	<800 mA	0V to +12000Vdc	<0.1% (12V p-p)	0 - 0.8mA	<0.2%	<0.1%
G10-N1200	G10-N1200/Y	<150 mA	<800 mA	0V to -12000Vdc	<0.1% (12V p-p)	0 - 0.8mA	<0.2%	<0.1%
G10-P1500	G10-P1500/Y	<170 mA	<850 mA	0V to +15000Vdc	<0.1% (15V p-p)	0 - 0.67mA	<0.2%	<0.1%
G10-N1500	G10-N1500/Y	<170 mA	<850 mA	0V to -15000Vdc	<0.1% (15V p-p)	0 - 0.67mA	<0.2%	<0.1%
G10-P2000	G10-P2000/Y	<180 mA	<900 mA	0V to +20000Vdc	<0.2% (40V p-p)	0 - 0.5mA	<0.2%	<0.1%
G10-N2000	G10-N2000/Y	<180 mA	<900 mA	0V to -20000Vdc	<0.2% (40V p-p)	0 - 0.5 mA	<0.2%	<0.1%

G10-P1000/Y

Product Family

Total Output Power

Positive/Negative Output

/Y RoHS Compliance

Customer Selects Output Voltage *

The G10 Series are designed such that the customer may order any output voltage (positive or negative) from 100Vdc to 20000Vdc at no additional charge.

****ACTUAL OUTPUT VOLTAGE IS 10X***

G10 SERIES 10 WATT PROGRAMABLE REGULATED HV DC/DC CONVERTER

Dimensions are in Inches
[Metric equivalents in brackets]

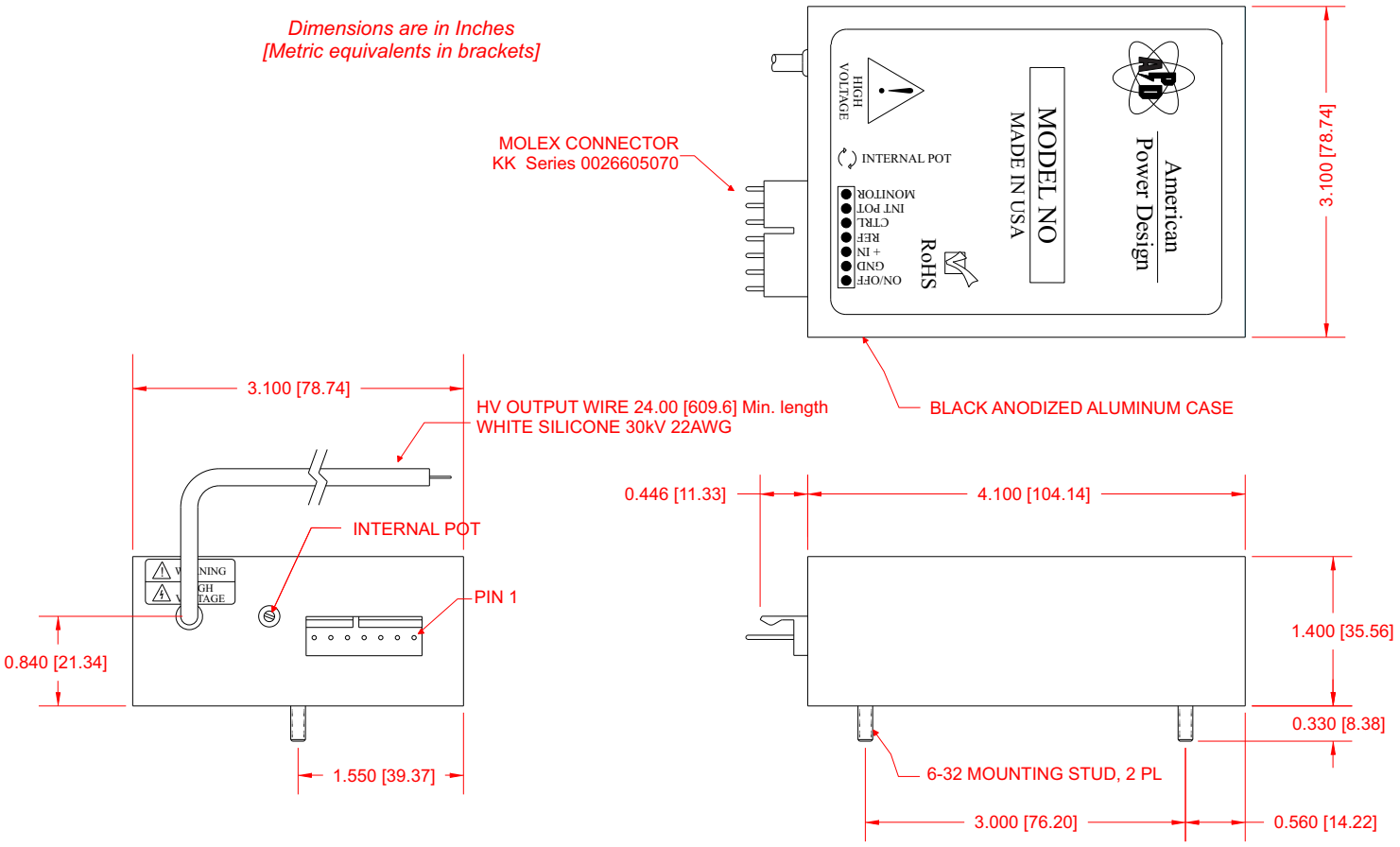

PIN #	FUNCTION
1	On/Off
2	Gnd / Case
3	+ Input
4	10V Reference
5	Control / Programming Voltage
6	Internal Potentiometer
7	Output Voltage Monitor

MATING CONNECTOR: Molex 009503071 (Supplied)
18-24 AWG CRIMP TERMINALS: Molex 008500106 (Supplied)

G10 SERIES 10 WATT PROGRAMABLE REGULATED HV DC/DC CONVERTER

APPLICATION NOTES

INRUSH CURRENT

The inrush current has been kept as low as possible. However, a series resistor may be inserted in the input line to limit this current further.

REVERSE INPUT PROTECTION

The G10 is equipped with a shunt diode placed in parallel with + Input (Pin 3) and GND (Pin 2) of the converter, this allows high current to flow if the incorrect polarity is applied.

SHORT CIRCUIT PROTECTION

The converter will fold-back the input power whenever a short circuit is applied to its output and automatically recover after the overload condition is removed.

NOTE:
Input fuse must not exceed 30A otherwise the supply may be permanently damaged.

RIPPLE AND NOISE

External low ESR capacitors may be added across output to further reduce ripple.

REMOTE ON/OFF CONTROL

The On/Off control pin allows the user to shut down the converter mechanically or logically using a relay or a TTL or CMOS logic signal.
ON= 0Vdc / OFF=5Vdc

Connect Remote On/Off pin to Gnd when not in use to ensure proper operation.

PROGRAMMING VOLTAGE

A 0V to +10V signal will program the power supply for 0 to 100% rated output voltage. The input impedance for this control pin is typically 100KΩ. If the programming signal exceeds 10.2Vdc the converter will shutdown and automatically recover when the programming signal returns to within normal operating range.

OUTPUT VOLTAGE TRACKING

The output voltage tracks the Control pin (Pin 5) within 0.5% from 5% to 100% of output voltage.

Figure below show a typical plot of both the actual and calculated output voltage as a function of control voltage.

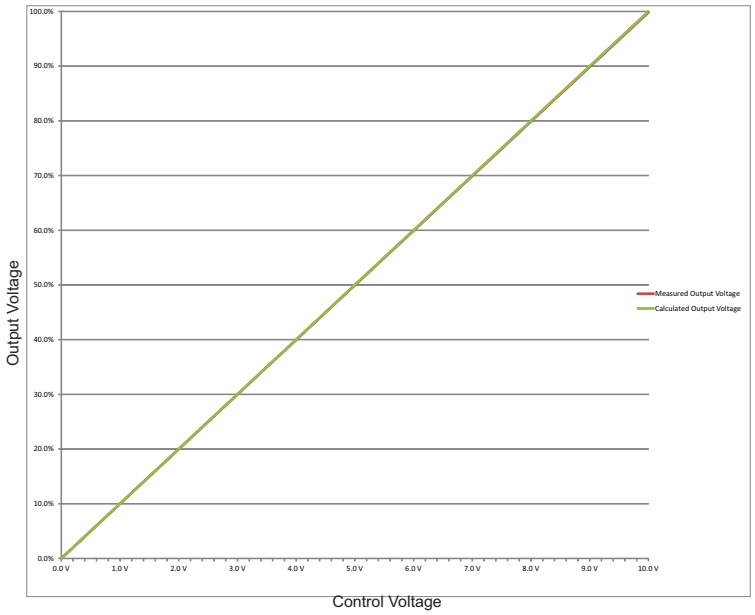

Operating Conditions:

Nominal Input Voltage = Fixed
Output Load = Resistive (fixed at full output current @ 100% output voltage)

G10 SERIES 10 WATT PROGRAMABLE REGULATED HV DC/DC CONVERTER

APPLICATION NOTES

INTERNAL POTENTIOMETER

The G10 Series is equipped with a internal multi-turn potentiometer and can be utilized to control the output voltage.

Figures below shows the typical connections needed.

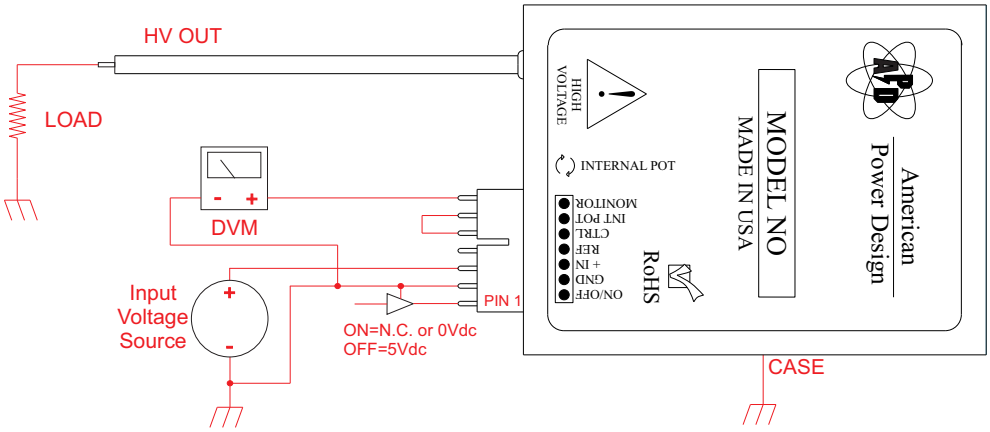

NOTE:

The Voltage Monitor polarity matches the high voltage output polarity

EXTERNAL / REMOTE POTENTIOMETER

The output voltage of the G10 Series can be controlled with and external or remote potentiometer .

Figures below shows the typical connections needed.

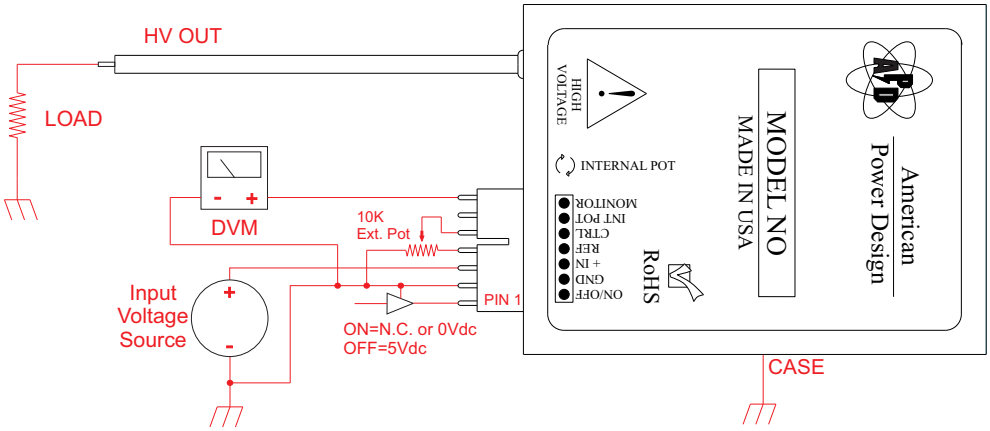

NOTE:

The Voltage Monitor polarity matches the high voltage output polarity

G10 SERIES 10 WATT PROGRAMABLE REGULATED HV DC/DC CONVERTER

APPLICATION NOTES

EXTERNAL / REMOTE VOLTAGE SOURCE

The output voltage of the G10 Series can be controlled with an external or remote voltage source .

Figures below shows the typical connections needed.

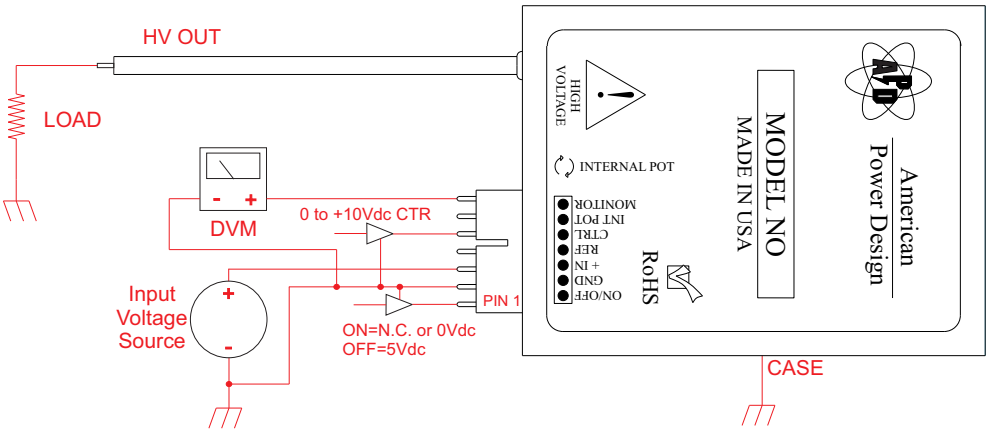

NOTE:

The Voltage Monitor polarity matches the high voltage output polarity

CONNECTION IN PARALLEL

Multiple G10 Series converters can be connected in parallel to achieve output power greater than 10 Watts.

Figures below shows the typical connections needed for connecting (2) + output converters in parallel.

NOTE:
The ratings of Dx should be 1.5 times the maximum current and voltage expected in each branch.

Diode polarity shown should be reversed for negative output voltages

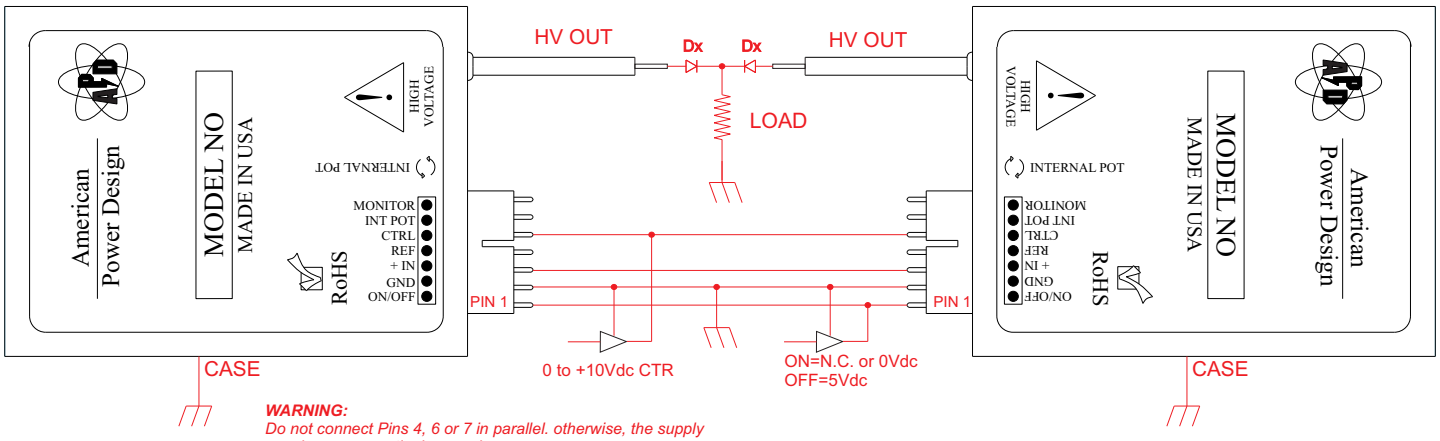

WARNING:
Do not connect Pins 4, 6 or 7 in parallel. otherwise, the supply may be permanently damaged.

APPLICATION NOTES

CLEANING AGENTS

In order to avoid possible damage, any penetration of cleaning fluids must be prevented, since the power supplies are not hermetically sealed.

NUCLEAR AND MEDICAL APPLICATIONS

American Power Design products are not designed, intended for use in, or authorized for use as critical components in life support systems, equipment used in hazardous environments, or nuclear control systems without the express written consent of American Power Design, Inc.

TECHNICAL REVISIONS

The appearance of products, including safety agency certifications pictured on labels, may change depending on the date manufactured. Specifications are subject to change without notice.

SAFETY REQUIREMENTS

The converters are designed to meet North American and International safety regulatory requirements per UL 60950-1/CSA 22.2 No. 60950-1-07 Second Edition, IEC 60950-1: 2005, and EN 60950-1:2006. To comply with safety agencies requirements, an input line fuse must be used external to the converter. The table below provides the recommended fuse rating for use with this family of products.

Input Voltage Range	Fuse Rating
22.8V - 28.8V	1.5A

If one input fuse is used for a group of modules, the maximum fuse rating should not exceed 30A.

WARRANTY

All products manufactured by American Power Design, Inc. (APD) are warranted to be free of defects due to material or workmanship for a period of one year from date of shipment. At our option, APD will repair or replace any non-conforming product.
APD expressly disclaims any liability for consequential or incidental damages resulting from the use or misuse of its products by the purchaser or others.
This warranty is in lieu of all warranties expressed or implied, including the warranties of merchantability. No other warranties, obligations, or liabilities are expressed or implied.
All products being returned for repair require a return material authorization(RMA) assigned by APD prior to return shipment.

American Power Design, Inc.

"The best high voltage design solution"

RoHS

H10 SERIES 10 WATT HIGH VOLTAGE DC/DC CONVERTERS

FEATURES

- Customer Selects Output Voltage
- Ultra Wide Input Ranges
  (5-15Vdc , 9-36Vdc , 20-60Vdc)
- Efficiency 83% (typ.)
- Independently Isolated Outputs
- Six-Sided Shielded Case
- Remote On/Off Control
- Continuous Short Circuit Protection

The H10 Series of DC/DC converters accepts ultra wide input ranges of 5-15 Vdc, 9-36 Vdc, & 20-60 Vdc. Outputs are independently isolated. In the case of duals, up to 4 Watts may be taken from either output. All models will tolerate a short circuit indefinitely. Also included is a Pi input filter and remote on/off.

ELECTRICAL SPECIFICATIONS

Voltage Accuracy	+/-3%
Line Regulation	+/- 3%
Load Regulation	(20% to full load) +/- 3%
Output Ripple	< 0.3% P-P
Input Filter	Pi Network
Efficiency	83% (typ.)
Short Circuit Protection	Continuous
Switching Frequency	100 kHz
Isolation (Input-Output(1)-Output(2)-Case)	1000 Vdc
Input / Output Capacitance	< 80pF

GENERAL SPECIFICATIONS

Temp. Stability	+/-0.02%/°C
Temp. (Operating , Case)	-45 to +85°C
Temp. (Storage)	-55 to +100°C
Logic Shutdown	Logic 0 (on)
EMI/RFI	Six Sided Shield
Derating	None
Cooling	Free-Air Convection

PHYSICAL SPECIFICATIONS

Dimensions	2 x 2 x 0.51 inches
Weight	2.8 Oz
Case Material	Nickel Plated Metal *(With Non-Conductive Base Plate)*

Tel (888) 894-4446 WWW.APOWERDESIGN.COM Fax (603) 898-6534

H10 SERIES 10 WATT HIGH VOLTAGE DC/DC CONVERTERS

REPRESENTATIVE MODEL LISTING									
OUTPUT SPECS				MODEL NUMBER / INPUT RANGE					
VOLTAGE		CURRENT		5-15VDC		9-36VDC		20-60VDC	
OUT #1	OUT #2	OUT #1	OUT #2	Non-RoHs	RoHs	Non-RoHs	RoHs	Non-RoHs	RoHs
50 Vdc	-	200 mA	-	H10-50	H10-50/Y	H10-50/A	H10-50/A/Y	H10-50/B	H10-24/B/Y
50 Vdc	50Vdc	100 mA	100 mA	H10-50/50	H10-50/50/Y	H10-50/50/A	H10-50/50/A/Y	H10-50/50/B	H10-50/50/B/Y
75Vdc	-	133 mA		H10-75	H10-75/Y	H10-75/A	H10-75/A/Y	H10-75/B	H10-75/B/Y
75 Vdc	75 Vdc	66 mA	66 mA	H10-75/75	H10-75/75/Y	H10-75/75/A	H10-75/75/A/Y	H10-75/75/B	H10-75/75/B/Y
100 Vdc	-	100 mA	-	H10-100	H10-100/Y	H10-100/A	H10-100/A/Y	H10-100/B	H10-100/B/Y
100 Vdc	100Vdc	50 mA	50 mA	H10-100/100	H10-100/100/Y	H10-100/100/A	H10-100/100/A/Y	H10-100/100/B	H10-100/100/B/Y
150 Vdc	-	66 mA	-	H10-150	H10-150/Y	H10-150/A	H10-150/A/Y	H10-150/B	H10-150/B/Y
150 Vdc	150 Vdc	33 mA	33 mA	H10-150/150	H10-150/150/Y	H10-150/150/A	H10-150/150/A/Y	H10-150/150/B	H10-150/150/B/Y
200 Vdc	-	50 mA	-	H10-200	H10-200/Y	H10-200/A	H10-200/A/Y	H10-200/B	H10-200/B/Y
200Vdc	200Vdc	25 mA	25 mA	H10-200/200	H10-200/200/Y	H10-200/200/A	H10-200/200/A/Y	H10-200/200/B	H10-200/200/B/Y
300 Vdc	-	33 mA	-	H10-300	H10-300/Y	H10-300/A	H10-300/A/Y	H10-300/B	H10-300/B/Y
300 Vdc	300 Vdc	16 mA	16 mA	H10-300/300	H10-300/300/Y	H10-300/300/A	H10-300/300/A/Y	H10-300/300/B	H10-300/300/B/Y
400Vdc	-	25 mA	-	H10-400	H10-400/Y	H10-400/A	H10-400/A/Y	H10-400/B	H10-400/B/Y
400Vdc	400 Vdc	12 mA	12 mA	H10-400/400	H10-400/400/Y	H10-400/400/A	H10-400/400/A/Y	H10-400/400/B	H10-400/400/B/Y
500 Vdc	-	20 mA	-	H10-500	H10-500/Y	H10-500/A	H10-500/A/Y	H10-500/B	H10-500/B/Y
500 Vdc	500Vdc	10 mA	10 mA	H10-500/500	H10-500/500/Y	H10-500/500/A	H10-500/500/A/Y	H10-500/500/B	H10-500/500/B/Y

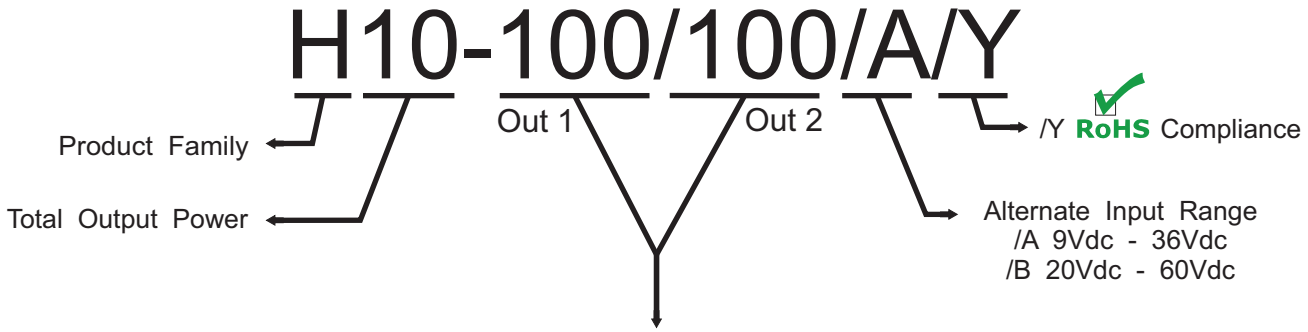

Customer Selects Output Voltage

The H10 Series are designed such that the customer may order any output voltage from 50Vdc to 500Vdc at no additional charge.

H10 SERIES 10 WATT HIGH VOLTAGE DC/DC CONVERTERS

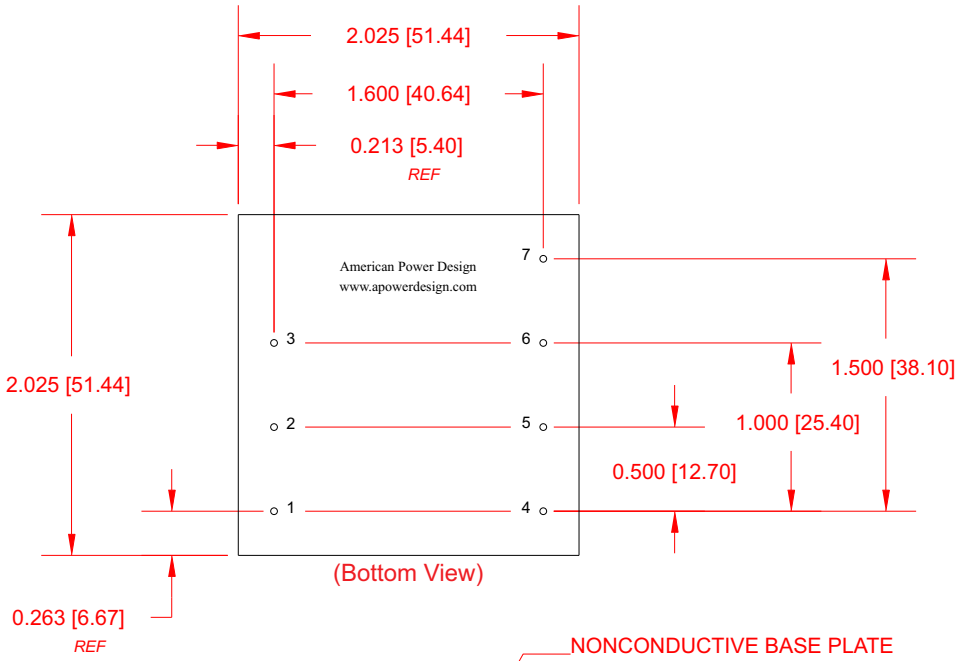

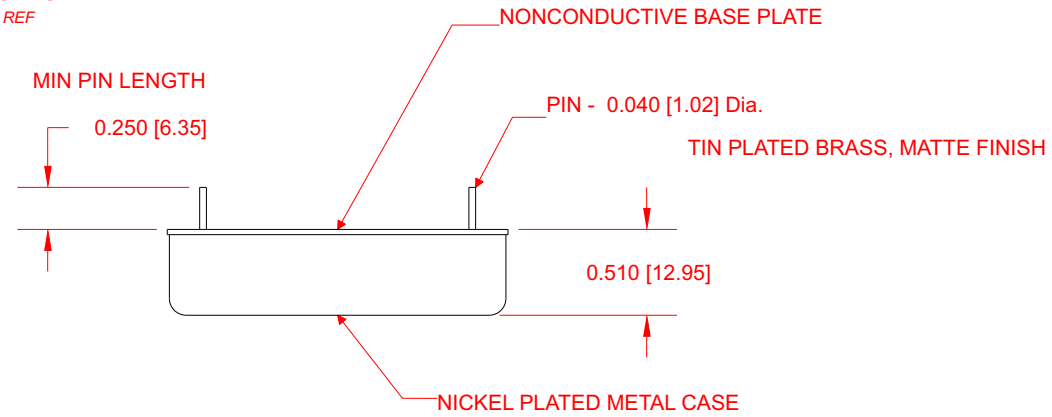

PIN #	SINGLE	DUAL
1	- Input	- Input
2	On/Off	On/Off
3	+ Input	+ Input
4	No Pin	+ Output 2
5	No Pin	- Output 2
6	- Output 1	- Output 1
7	+ Output 1	+ Output 1

Dimensions are in Inches
[Metric equivalents in brackets]

H10 SERIES 10 WATT HIGH VOLTAGE DC/DC CONVERTERS

APPLICATION NOTES

INPUT AND OUTPUT IMPEDANCE

The H10 Series of power converters have been designed to be stable with no external capacitors when used in low inductance input and output circuits. However, in some applications, the inductance associated with the distribution from the power source to the input of the converter can affect the stability of the converter. The addition of a 100 µF electrolytic capacitor with an ESR <1 Ohm across the input helps ensure stability of the converter. In many applications, the user has to use decoupling capacitance at the load.

SHORT CIRCUIT PROTECTION

The H10 Series is equipped with short circuit protection. The converter will fold-back the input power whenever a short circuit is applied to its output and automatically recover after the overload condition is removed.

ISOLATION

The output(s) of the H10 Series is galvanically isolated from both the input and case, capacitance is < 80pF and resistance is > 10G Ohm.

In the case of dual's, the outputs are independently isolated from one another as well as the input and case.

RIPPLE AND NOISE

Figure below shows a typical output voltage ripple waveform, measured at full rated load current with no additional output filtering. External low ESR capacitors may be added across output to further reduce ripple.

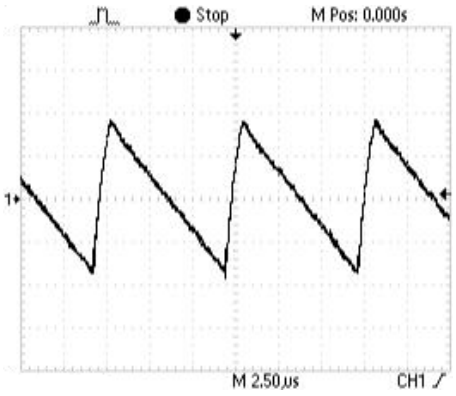

STARTUP TRANSIENT

Figure below shows a typical output voltage during turn-on, measured at 20% load current with no additional output filtering.

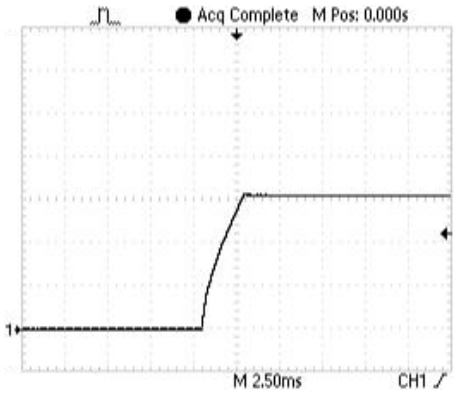

Figure below shows a typical output voltage during turn-on, measured at full rated load current with no additional output filtering.

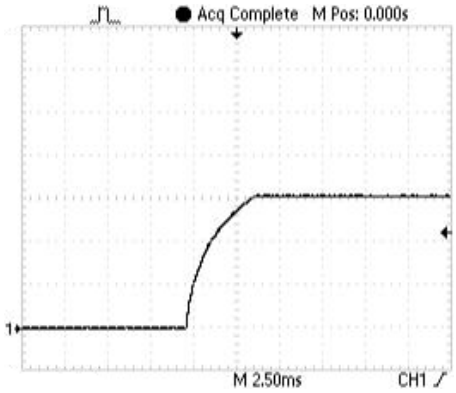

H10 SERIES 10 WATT HIGH VOLTAGE DC/DC CONVERTERS

APPLICATION NOTES

INRUSH CURRENT

The inrush current of the H10 Series has been kept as low as possible. However, a series resistor may be inserted in the input line to limit this current further.

LOAD TRANSIENT

Figure below shows a typical output voltage response, measured during a transition from full rated load current to 20% load current with no additional output filtering.

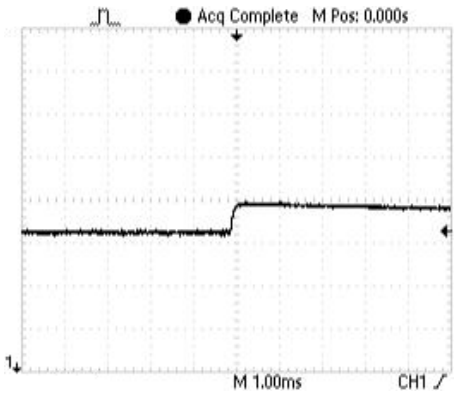

Figure below shows a typical output voltage response, measured during a transition from 20% load current to full rated load current with no additional output filtering.

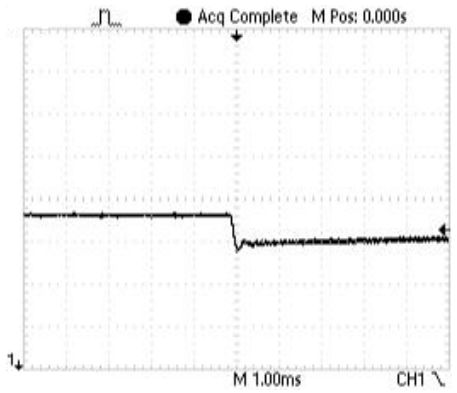

REMOTE ON/OFF CONTROL

The On/Off control pin allows the user to shut down the converter mechanically or logically using a relay or a TTL or CMOS logic signal.

Connect Remote On/Off pin to -Input when not in use to ensure proper operation.

Resistor R1 can be calculated by:

$$R1 = \frac{(+\text{Input} - 5)}{1mA}$$

Converter Off: Vc >3Vdc
Converter On: Vc <1.5Vdc

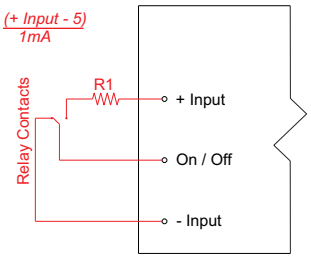

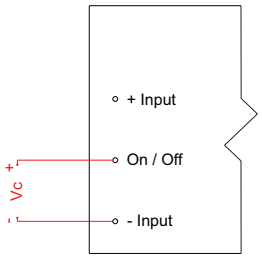

NOTE:
Do not exceed 6Vdc on remote On/Off. otherwise, the supply may be permanently damaged.

OUTPUT CONFIGURATIONS

Due to the unique independently isolated outputs of the H10 series both Output #1 and Output #2 may be connected in a wide variety configurations.
The Figures below are some examples.

Dual Positive Output

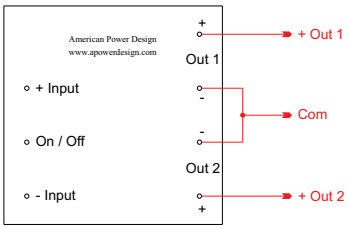

Dual Negitive Output

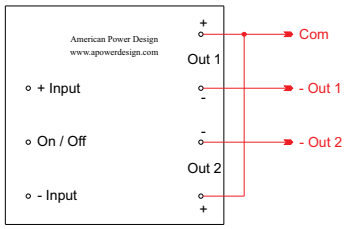

Bipolar Output

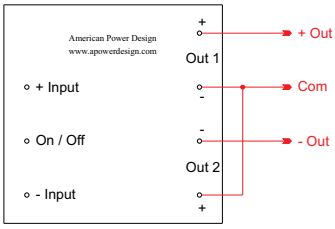

Outputs > 500Vdc

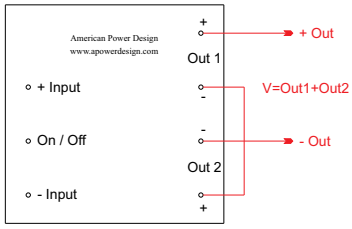

H10 SERIES 10 WATT HIGH VOLTAGE DC/DC CONVERTERS

APPLICATION NOTES

CONNECTION IN PARALLEL

The figure below shows how to connect several single output units with equal nominal output voltage in parallel.

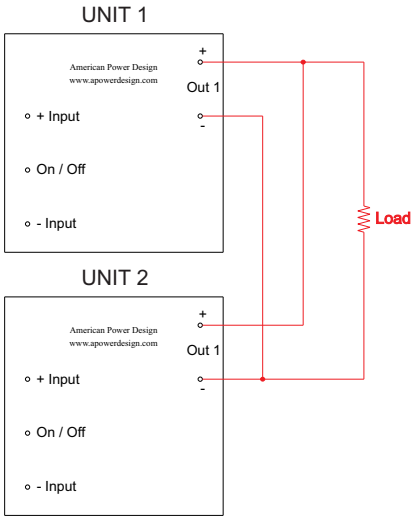

The figure below show how to connect several dual output units with equal nominal output voltage in parallel.

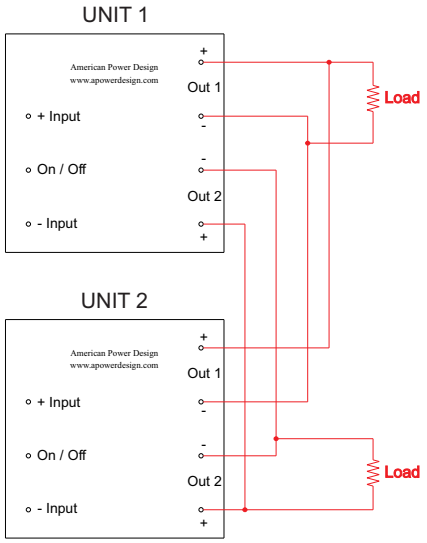

CONNECTION IN SERIES

When connecting units in series, the highest achieved output voltage should remain below the rated isolation voltage.

Figure below shows how to connect multiple single output units in series with the use of shunt diodes.

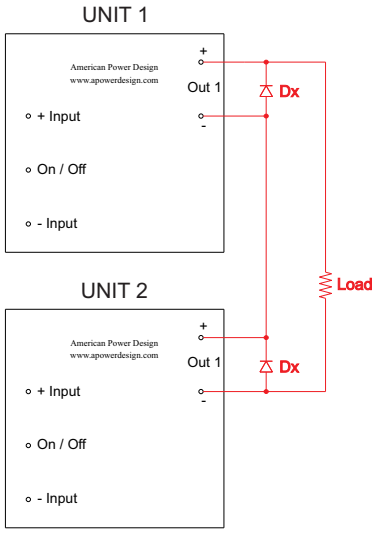

NOTE:
The ratings of Dx should be 1.5 times the maximum current and voltage expected in each branch.

Figure below shows how to connect multiple dual output units in series with the use of shunt diodes.

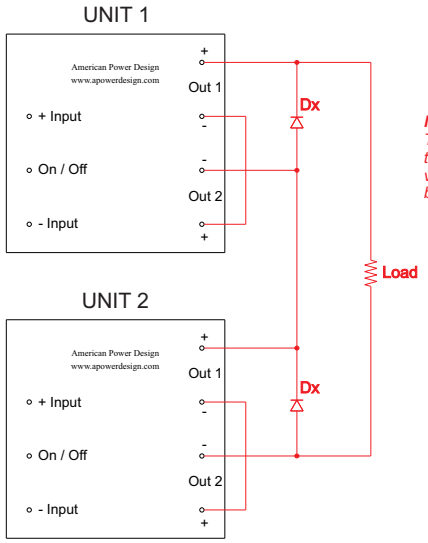

NOTE:
The ratings of Dx should be 1.5 times the maximum current and voltage (Out 1 + Out 2) in each branch.

H10 SERIES 10 WATT HIGH VOLTAGE DC/DC CONVERTERS

APPLICATION NOTES

CLEANING AGENTS

In order to avoid possible damage, any penetration of cleaning fluids must be prevented, since the power supplies are not hermetically sealed.

NUCLEAR AND MEDICAL APPLICATIONS

American Power Design products are not designed, intended for use in, or authorized for use as critical components in life support systems, equipment used in hazardous environments, or nuclear control systems without the express written consent of American Power Design, Inc.

TECHNICAL REVISIONS

The appearance of products, including safety agency certifications pictured on labels, may change depending on the date manufactured. Specifications are subject to change without notice.

SAFETY REQUIREMENTS

The converters are designed to meet North American and International safety regulatory requirements per UL 60950-1/CSA 22.2 No. 60950-1-07 Second Edition, IEC 60950-1: 2005, and EN 60950-1:2006. Basic Insulation is provided between input and output. To comply with safety agencies requirements, an input line fuse must be used external to the converter. The table below provides the recommended fuse rating for use with this family of products.

Input Voltage Range	Fuse Rating
5-15Vdc	3A
9-36Vdc	1.5A
20-60Vdc	1A

If one input fuse is used for a group of modules, the maximum fuse rating should not exceed 10A.

WARRANTY

All products manufactured by American Power Design, Inc. (APD) are warranted to be free of defects due to material or workmanship for a period of one year from date of shipment. At our option, APD will repair or replace any non-conforming product.
APD expressly disclaims any liability for consequential or incidental damages resulting from the use or misuse of its products by the purchaser or others.
This warranty is in lieu of all warranties expressed or implied, including the warranties of merchantability. No other warranties, obligations, or liabilities are expressed or implied.
All products being returned for repair require a return material authorization(RMA) assigned by APD prior to return shipment.

American Power Design, Inc.

"The best high voltage design solution"

RoHS

H30 SERIES 30 WATT HIGH VOLTAGE DC/DC CONVERTERS

FEATURES

- Customer Selects Output Voltage
- Ultra Wide Input Ranges
  (9-36Vdc , 20-60Vdc)
- Efficiency 85% (typ.)
- Independently Isolated Outputs
- Six-Sided Shielded Case
- Remote On/Off Control
- Continuous Short Circuit Protection

The H30 Series of DC/DC converters accepts ultra wide input ranges of 9-36 Vdc & 20-60 Vdc. Outputs are independently isolated. In the case of duals, up to 24 Watts may be taken from either output. All models will tolerate a short circuit indefinitely. Also included is a Pi input filter and remote on/off.

ELECTRICAL SPECIFICATIONS

Voltage Accuracy	+/-3%
Line Regulation	+/- 4%
Load Regulation	(20% to full load) +/- 4%
Output Ripple	< 0.4% P-P
Input Filter	Pi Network
Efficiency	87% (typ.)
Short Circuit Protection	Continuous
Switching Frequency	100 kHz
Isolation (Input-Output(1)-Output(2)-Case)	1000 Vdc
Input / Output Capacitance	< 160pF

GENERAL SPECIFICATIONS

Temp. Stability	+/-0.02%/°C
Temp. (Operating , Case)	-45 to +85°C
Temp. (Storage)	-55 to +100°C
Logic Shutdown	Logic 0 (on)
EMI/RFI	Six Sided Shield
Derating	None
Cooling	Free-Air Convection

PHYSICAL SPECIFICATIONS

Dimensions	2.6 x 3.0 x 0.83 inches
Weight	8.3 Oz
Case Material	Nickel Plated Metal *(With Non-Conductive Base Plate)*

H30 SERIES 30 WATT HIGH VOLTAGE DC/DC CONVERTERS

REPRESENTATIVE MODEL LISTING							
OUTPUT SPECS				MODEL NUMBER / INPUT RANGE			
VOLTAGE		CURRENT		9-36VDC		20-60VDC	
OUT #1	OUT #2	OUT #1	OUT #2	Non-RoHs	RoHs	Non-RoHs	RoHs
50 Vdc	-	600 mA	-	H30-50	H30-50/Y	H30-50/B	H30-50/B/Y
50 Vdc	50Vdc	300 mA	300 mA	H30-50/50	H30-50/50/Y	H30-50/50/B	H30-50/50/B/Y
75Vdc	-	400 mA		H30-75	H30-75/Y	H30-75/B	H30-75/B/Y
75 Vdc	75 Vdc	200 mA	200 mA	H30-75/75	H30-75/75/Y	H30-75/75/B	H30-75/75/B/Y
100 Vdc	-	300 mA	-	H30-100	H30-100/Y	H30-100/B	H30-100/B/Y
100 Vdc	100Vdc	150 mA	150 mA	H30-100/100	H30-100/100/Y	H30-100/100/B	H30-100/100/B/Y
150 Vdc	-	200 mA	-	H30-150	H30-150/Y	H30-150/B	H30-150/B/Y
150 Vdc	150 Vdc	100 mA	100 mA	H30-150/150	H30-150/150/Y	H30-150/150/B	H30-150/150/B/Y
200 Vdc	-	150 mA	-	H30-200	H30-200/Y	H30-200/B	H30-200/B/Y
200Vdc	200Vdc	75 mA	75 mA	H30-200/200	H30-200/200/Y	H30-200/200/B	H30-200/200/B/Y
300 Vdc	-	100 mA	-	H30-300	H30-300/Y	H30-300/B	H30-300/B/Y
300 Vdc	300 Vdc	50 mA	50 mA	H30-300/300	H30-300/300/Y	H30-300/300/B	H30-300/300/B/Y
400Vdc	-	75 mA	-	H30-400	H30-400/Y	H30-400/B	H30-400/B/Y
400Vdc	400 Vdc	37 mA	37 mA	H30-400/400	H30-400/400/Y	H30-400/400/B	H30-400/400/B/Y
500 Vdc	-	60 mA	-	H30-500	H30-500/Y	H30-500/B	H30-500/B/Y
500 Vdc	500Vdc	30 mA	30 mA	H30-500/500	H30-500/500/Y	H30-500/500/B	H30-500/500/B/Y

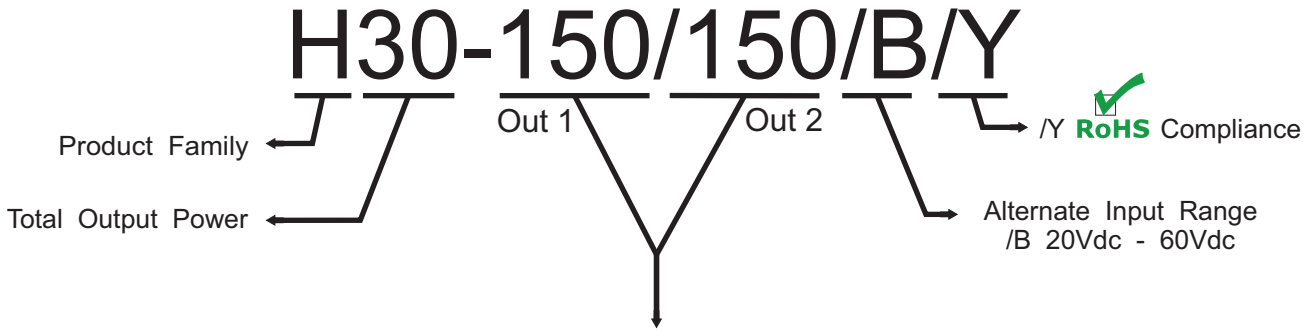

Customer Selects Output Voltage

The H30 Series are designed such that the customer may order any output voltage from 50Vdc to 500Vdc at no additional charge.

H30 SERIES 30 WATT HIGH VOLTAGE DC/DC CONVERTERS

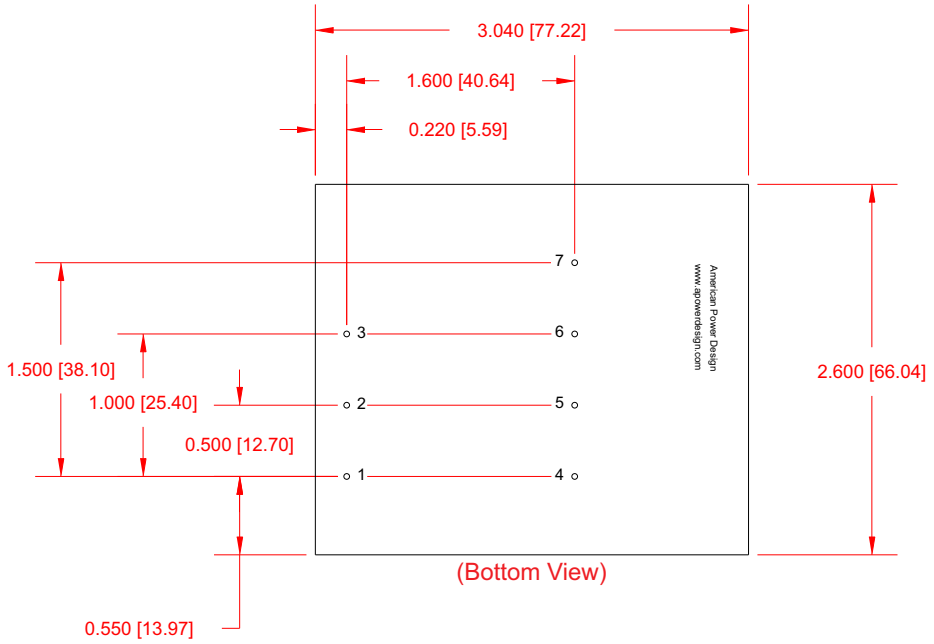

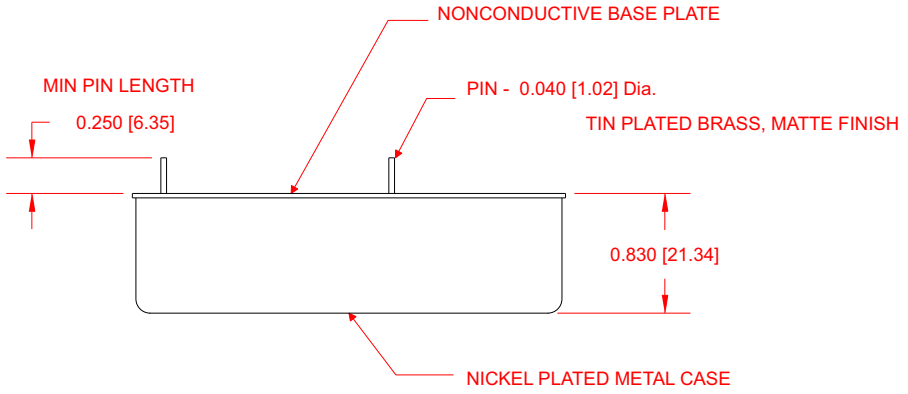

PIN #	SINGLE	DUAL
1	- Input	- Input
2	On/Off	On/Off
3	+ Input	+ Input
4	No Pin	+ Output 2
5	No Pin	- Output 2
6	- Output 1	- Output 1
7	+ Output 1	+ Output 1

Dimensions are in Inches
[Metric equivalents in brackets]

H30 SERIES 30 WATT HIGH VOLTAGE DC/DC CONVERTERS

APPLICATION NOTES

INPUT AND OUTPUT IMPEDANCE

The H30 Series of power converters have been designed to be stable with no external capacitors when used in low inductance input and output circuits. However, in some applications, the inductance associated with the distribution from the power source to the input of the converter can affect the stability of the converter. The addition of a 100 µF electrolytic capacitor with an ESR <1 Ohm across the input helps ensure stability of the converter. In many applications, the user has to use decoupling capacitance at the load.

SHORT CIRCUIT PROTECTION

The H30 Series is equipped with short circuit protection. The converter will fold-back the input power whenever a short circuit is applied to its output and automatically recover after the overload condition is removed.

ISOLATION

The output(s) of the H30 Series is galvanically isolated from both the input and case, capacitance is < 80pF and resistance is > 10G Ohm.

In the case of dual's, the outputs are independently isolated from one another as well as the input and case.

RIPPLE AND NOISE

Figure below shows a typical output voltage ripple waveform, measured at full rated load current with no additional output filtering. External low ESR capacitors may be added across output to further reduce ripple.

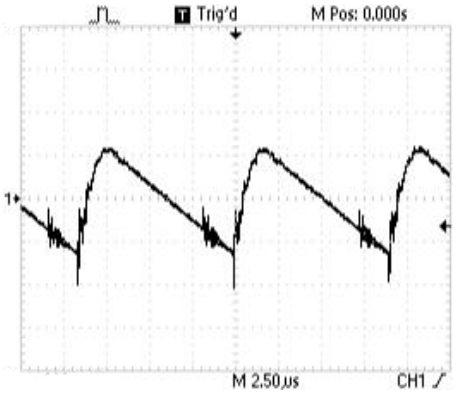

STARTUP TRANSIENT

Figure below shows a typical output voltage during turn-on, measured at 20% load current with no additional output filtering.

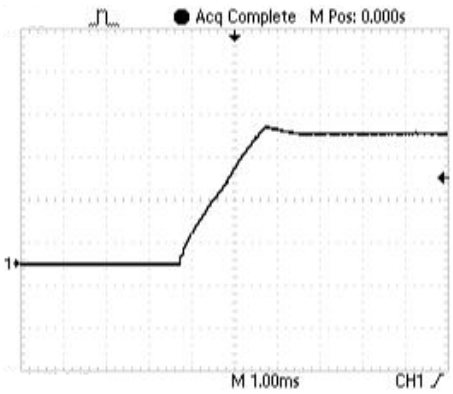

Figure below shows a typical output voltage during turn-on, measured at full rated load current with no additional output filtering.

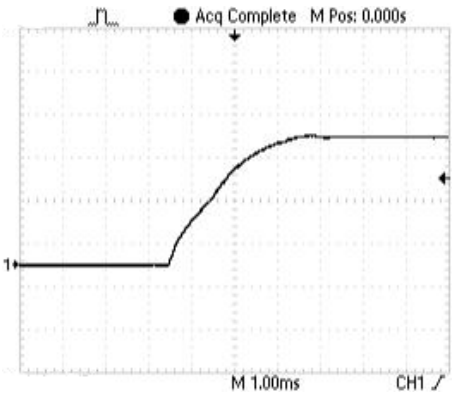

H30 SERIES 30 WATT HIGH VOLTAGE DC/DC CONVERTERS

APPLICATION NOTES

INRUSH CURRENT

The inrush current of the H30 Series has been kept as low as possible. However, a series resistor may be inserted in the input line to limit this current further.

LOAD TRANSIENT

Figure below shows a typical output voltage response, measured during a transition from full rated load current to 20% load current with no additional output filtering.

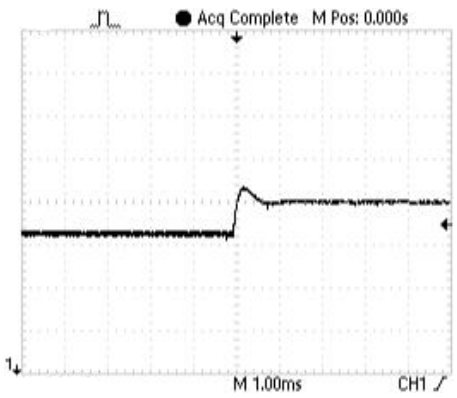

Figure below shows a typical output voltage response, measured during a transition from 20% load current to full rated load current with no additional output filtering.

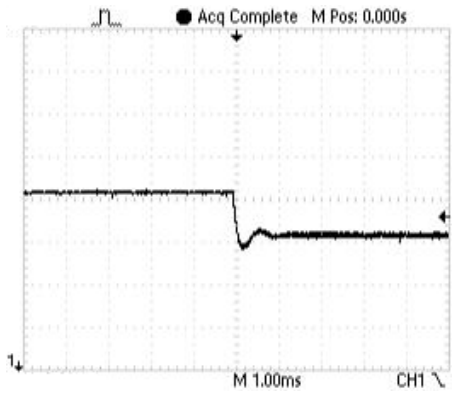

REMOTE ON/OFF CONTROL

The On/Off control pin allows the user to shut down the converter mechanically or logically using a relay or a TTL or CMOS logic signal.

Connect Remote On/Off pin to -Input when not in use to ensure proper operation.

Resistor R1 can be calculated by:

$$R1 = \frac{(+\text{Input} - 5)}{1mA}$$

Converter Off: Vc >3Vdc
Converter On: Vc <1.5Vdc

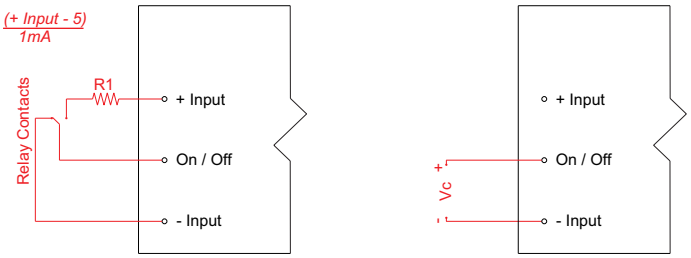

NOTE:
Do not exceed 6Vdc on remote On/Off. otherwise, the supply may be permanently damaged.

OUTPUT CONFIGURATIONS

Due to the unique independently isolated outputs of the H30 series both Output #1 and Output #2 may be connected in a wide variety configurations.
The Figures below are some examples.

Dual Positive Output

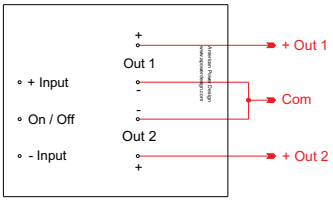

Dual Negitive Output

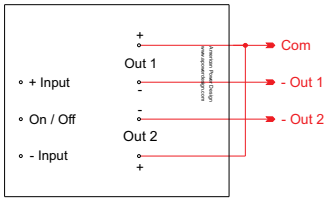

Bipolar Output

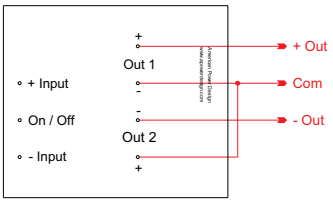

Outputs > 500Vdc

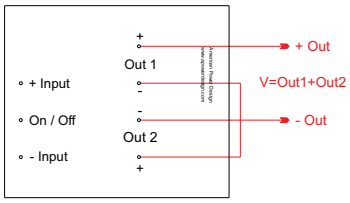

H30 SERIES 30 WATT HIGH VOLTAGE DC/DC CONVERTERS

APPLICATION NOTES

CONNECTION IN PARALLEL

The figure below shows how to connect several single output units with equal nominal output voltage in parallel.

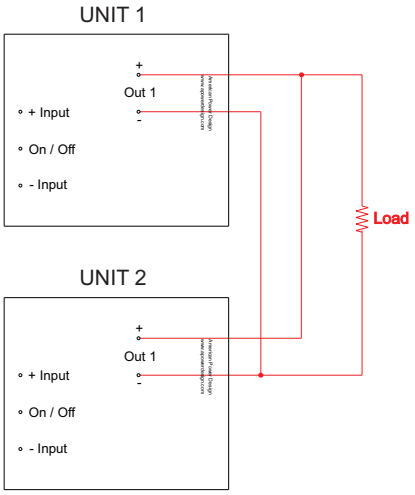

The figure below shows how to connect several dual output units with equal nominal output voltage in parallel.

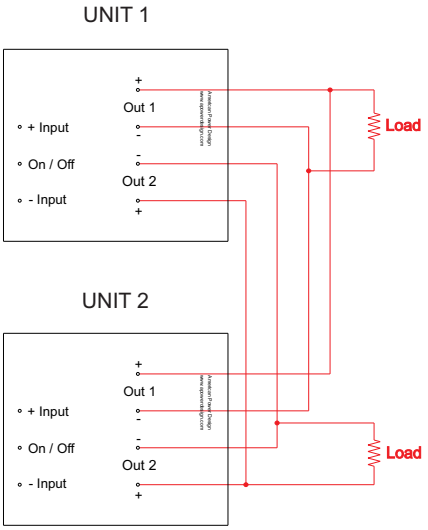

CONNECTION IN SERIES

When connecting units in series, the highest achieved output voltage should remain below the rated isolation voltage.

Figure below shows how to connect multiple single output units in series with the use of shunt diodes.

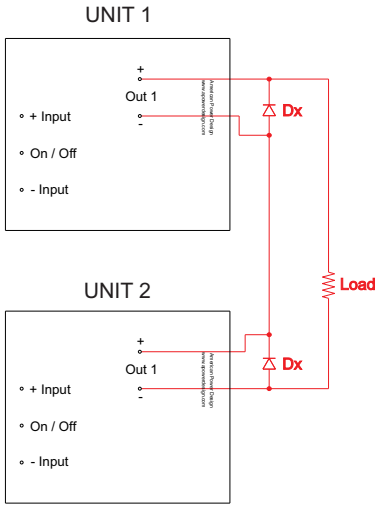

NOTE:
The ratings of Dx should be 1.5 times the maximum current and voltage expected in each branch.

Figure below shows how to connect multiple dual output units in series with the use of shunt diodes.

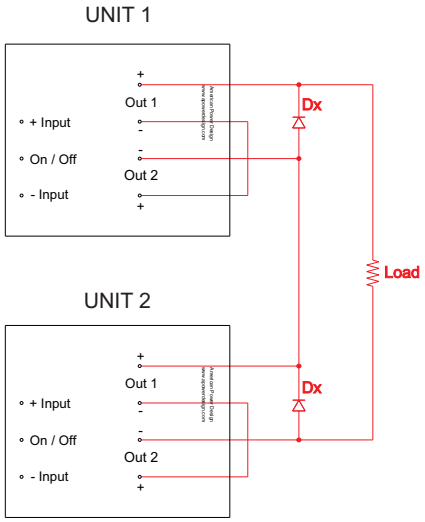

NOTE:
The ratings of Dx should be 1.5 times the maximum current and voltage (Out 1 + Out 2) in each branch.

H30 SERIES 30 WATT HIGH VOLTAGE DC/DC CONVERTERS

APPLICATION NOTES

CLEANING AGENTS

In order to avoid possible damage, any penetration of cleaning fluids must be prevented, since the power supplies are not hermetically sealed.

NUCLEAR AND MEDICAL APPLICATIONS

American Power Design products are not designed, intended for use in, or authorized for use as critical components in life support systems, equipment used in hazardous environments, or nuclear control systems without the express written consent of American Power Design, Inc.

TECHNICAL REVISIONS

The appearance of products, including safety agency certifications pictured on labels, may change depending on the date manufactured. Specifications are subject to change without notice.

SAFETY REQUIREMENTS

The converters are designed to meet North American and International safety regulatory requirements per UL 60950-1/CSA 22.2 No. 60950-1-07 Second Edition, IEC 60950-1: 2005, and EN 60950-1:2006. Basic Insulation is provided between input and output. To comply with safety agencies requirements, an input line fuse must be used external to the converter. The table below provides the recommended fuse rating for use with this family of products.

Input Voltage Range	Fuse Rating
9-36Vdc	5A
20-60Vdc	2.5A

If one input fuse is used for a group of modules, the maximum fuse rating should not exceed 10A.

WARRANTY

All products manufactured by American Power Design, Inc. (APD) are warranted to be free of defects due to material or workmanship for a period of one year from date of shipment. At our option, APD will repair or replace any non-conforming product.
APD expressly disclaims any liability for consequential or incidental damages resulting from the use or misuse of its products by the purchaser or others.
This warranty is in lieu of all warranties expressed or implied, including the warranties of merchantability. No other warranties, obligations, or liabilities are expressed or implied.
All products being returned for repair require a return material authorization(RMA) assigned by APD prior to return shipment.

American Power Design, Inc.

"The best high voltage design solution"

RoHS

H50 SERIES 50 WATT HIGH VOLTAGE DC/DC CONVERTERS

FEATURES

- Customer Selects Output Voltage
- Ultra Wide Input Ranges
  (9-36Vdc , 20-60Vdc)
- Efficiency 89% (typ.)
- Independently Isolated Outputs
- Six-Sided Shielded Case
- Remote On/Off Control
- Continuous Short Circuit Protection

The H50 Series of DC/DC converters accepts ultra wide input ranges of 9-36 Vdc, and 20-60 Vdc. Outputs are independently isolated. In the case of duals, up to 40 watts may be taken from either output. All models will tolerate a short circuit indefinitely. Also included is a Pi input filter and remote on/off.

ELECTRICAL SPECIFICATIONS

Voltage Accuracy	+/- 3%
Line Regulation	+/- 5%
Load Regulation	(20% to full load) +/- 5%
Output Ripple	< 0.5% P-P
Input Filter	Pi Network
Efficiency	89% (typ.)
Short Circuit Protection	Continuous
Switching Frequency	100 kHz
Isolation (Input-Output(1)-Output(2)-Case)	1000 Vdc
Input / Output Capacitance	< 100pF

GENERAL SPECIFICATIONS

Temp. Stability	+/-0.02%/°C
Temp. (Operating , Case)	-45 to +85°C
Temp. (Storage)	-55 to +100°C
Logic Shutdown	Logic 0 (on)
EMI/RFI	Six Sided Shield
Derating	None
Cooling	Free-Air Convection

PHYSICAL SPECIFICATIONS

Dimensions	2.57 x 4.57 x 0.84 inches
Weight	12.7 Oz
Case Material	Black Coated Metal *(With Non-Conductive Base Plate)*

H50 SERIES 50 WATT HIGH VOLTAGE DC/DC CONVERTERS

REPRESENTATIVE MODEL LISTING							
OUTPUT SPECS				MODEL NUMBER / INPUT RANGE			
VOLTAGE		CURRENT		9-36VDC		20-60VDC	
OUT #1	OUT #2	OUT #1	OUT #2	Non-RoHs	RoHs	Non-RoHs	RoHs
50 Vdc	-	1 A	-	H50-50	H50-50/Y	H50-50/B	H50-50/B/Y
50 Vdc	50 Vdc	500 mA	500 mA	H50-50/50	H50-50/50/Y	H50-50/50/B	H50-50/50/B/Y
75 Vdc	-	666 mA		H50-75	H50-75/Y	H50-75/B	H50-75/B/Y
75 Vdc	75 Vdc	333 mA	333 mA	H50-75/75	H50-75/75/Y	H50-75/75/B	H50-75/75/B/Y
100 Vdc	-	500 mA	-	H50-100	H50-100/Y	H50-100/B	H50-100/B/Y
100 Vdc	100 Vdc	250 mA	250 mA	H50-100/100	H50-100/100/Y	H50-100/100/B	H50-100/100/B/Y
150 Vdc	-	333 mA	-	H50-150	H50-150/Y	H50-150/B	H50-150/B/Y
150 Vdc	150 Vdc	166 mA	166 mA	H50-150/150	H50-150/150/Y	H50-150/150/B	H50-150/150/B/Y
200 Vdc	-	250 mA	-	H50-200	H50-200/Y	H50-200/B	H50-200/B/Y
200 Vdc	200 Vdc	125 mA	125 mA	H50-200/200	H50-200/200/Y	H50-200/200/B	H50-200/200/B/Y
300 Vdc	-	166 mA	-	H50-300	H50-300/Y	H50-300/B	H50-300/B/Y
300 Vdc	300 Vdc	83 mA	83 mA	H50-300/300	H50-300/300/Y	H50-300/300/B	H50-300/300/B/Y
400 Vdc	-	125 mA	-	H50-400	H50-400/Y	H50-400/B	H50-400/B/Y
400 Vdc	400 Vdc	62 mA	62 mA	H50-400/400	H50-400/400/Y	H50-400/400/B	H50-400/400/B/Y
500 Vdc	-	100 mA	-	H50-500	H50-500/Y	H50-500/B	H50-500/B/Y
500 Vdc	500 Vdc	50 mA	50 mA	H50-500/500	H50-500/500/Y	H50-500/500/B	H50-500/500/B/Y

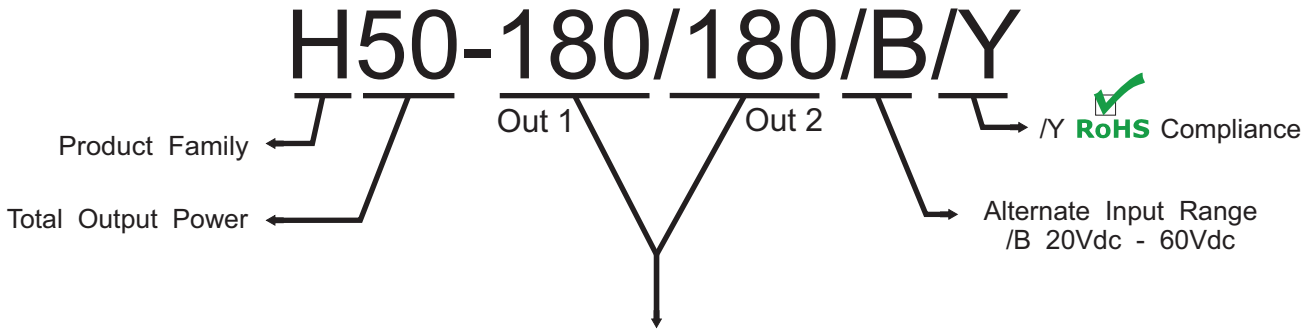

Customer Selects Output Voltage

The H50 Series are designed such that the customer may order any output voltage from 50Vdc to 500Vdc at no additional charge.

H50 SERIES 50 WATT HIGH VOLTAGE DC/DC CONVERTERS

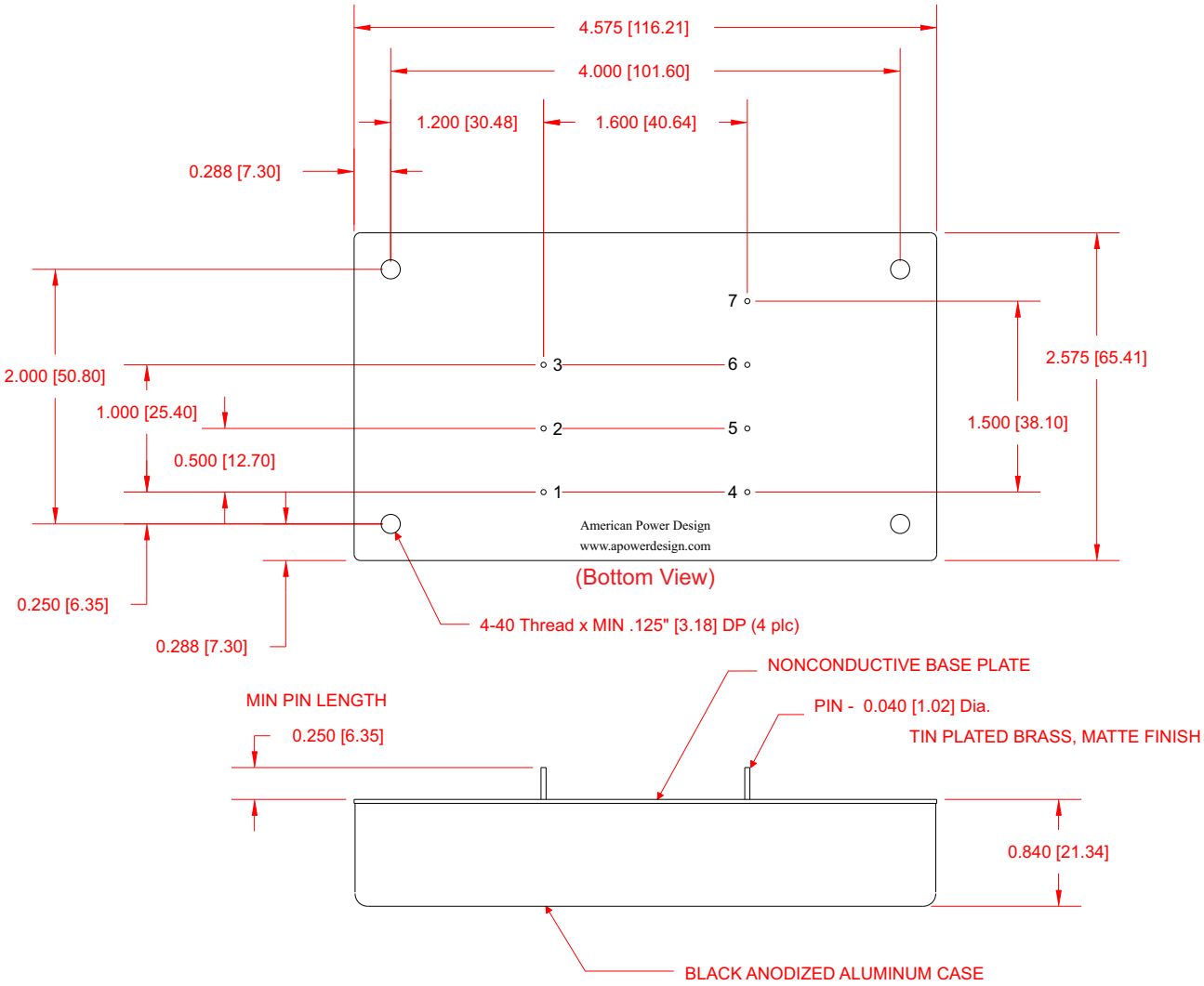

PIN #	SINGLE	DUAL
1	- Input	- Input
2	On/Off	On/Off
3	+ Input	+ Input
4	No Pin	+ Output 2
5	No Pin	- Output 2
6	- Output 1	- Output 1
7	+ Output 1	+ Output 1

Dimensions are in Inches
[Metric equivalents in brackets]

H50 SERIES 50 WATT HIGH VOLTAGE DC/DC CONVERTERS

APPLICATION NOTES

INPUT AND OUTPUT IMPEDANCE

The H50 Series of power converters have been designed to be stable with no external capacitors when used in low inductance input and output circuits. However, in some applications, the inductance associated with the distribution from the power source to the input of the converter can affect the stability of the converter. The addition of a 100 µF electrolytic capacitor with an ESR <1 Ohm across the input helps ensure stability of the converter. In many applications, the user has to use decoupling capacitance at the load.

SHORT CIRCUIT PROTECTION

The H50 Series is equipped with short circuit protection. The converter will fold-back the input power whenever a short circuit is applied to its output and automatically recover after the overload condition is removed.

ISOLATION

The output(s) of the H50 Series is galvanically isolated from both the input and case, capacitance is < 100 pF and resistance is > 10G Ohm.

In the case of dual's, the outputs are independently isolated from one another as well as the input and case.

RIPPLE AND NOISE

Figure below shows a typical output voltage ripple waveform, measured at full rated load current with no additional output filtering. External low ESR capacitors may be added across output to further reduce ripple.

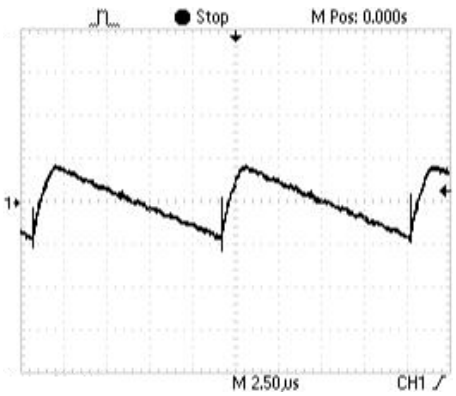

STARTUP TRANSIENT

Figure below shows a typical output voltage during turn-on, measured at 20% load current with no additional output filtering.

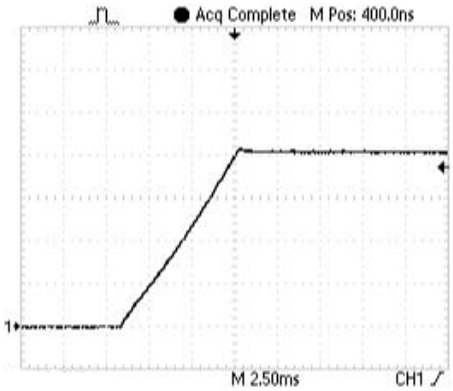

Figure below shows a typical output voltage during turn-on, measured at full rated load current with no additional output filtering.

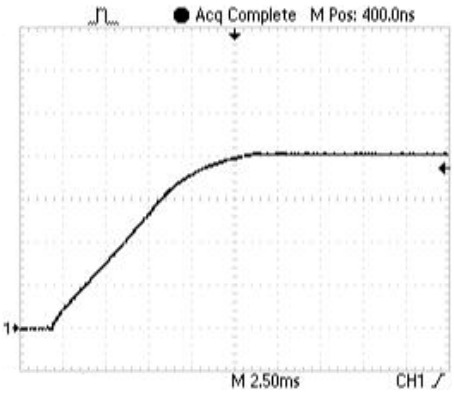

H50 SERIES 50 WATT HIGH VOLTAGE DC/DC CONVERTERS

APPLICATION NOTES

INRUSH CURRENT

The inrush current of the H50 Series has been kept as low as possible. However, a series resistor may be inserted in the input line to limit this current further.

LOAD TRANSIENT

Figure below shows a typical output voltage response, measured during a transition from full rated load current to 20% load current with no additional output filtering.

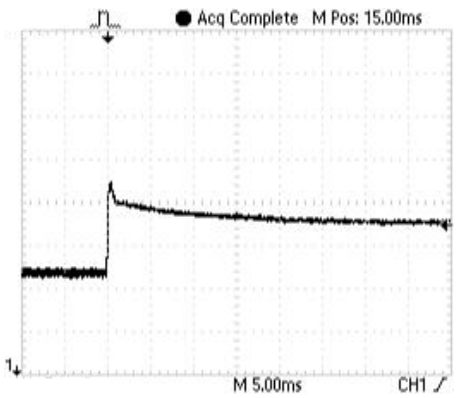

Figure below shows a typical output voltage response, measured during a transition from 20% load current to full rated load current with no additional output filtering.

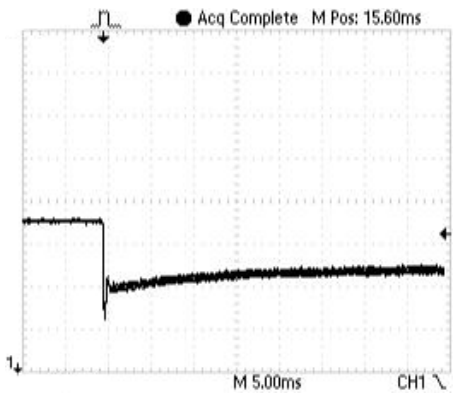

REMOTE ON/OFF CONTROL

The On/Off control pin allows the user to shut down the converter mechanically or logically using a relay or a TTL or CMOS logic signal.

Connect Remote On/Off pin to -Input when not in use to ensure proper operation.

Resistor R1 can be calculated by:

$$R1 = \frac{(+\text{Input} - 5)}{1mA}$$

Converter Off: Vc >3Vdc
Converter On: Vc <1.5Vdc

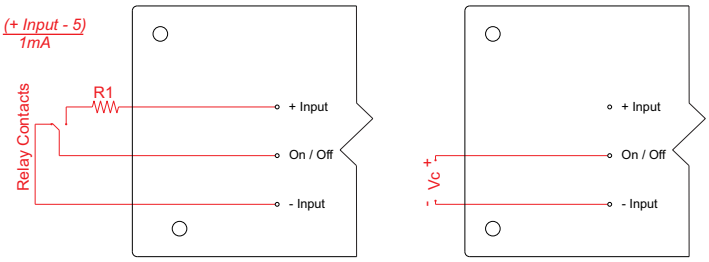

NOTE:
Do not exceed 6Vdc on remote On/Off. otherwise, the supply may be permanently damaged.

OUTPUT CONFIGURATIONS

Due to the unique independently isolated outputs of the H50 series both Output #1 and Output #2 may be connected in a wide variety configurations.
The Figures below are some examples.

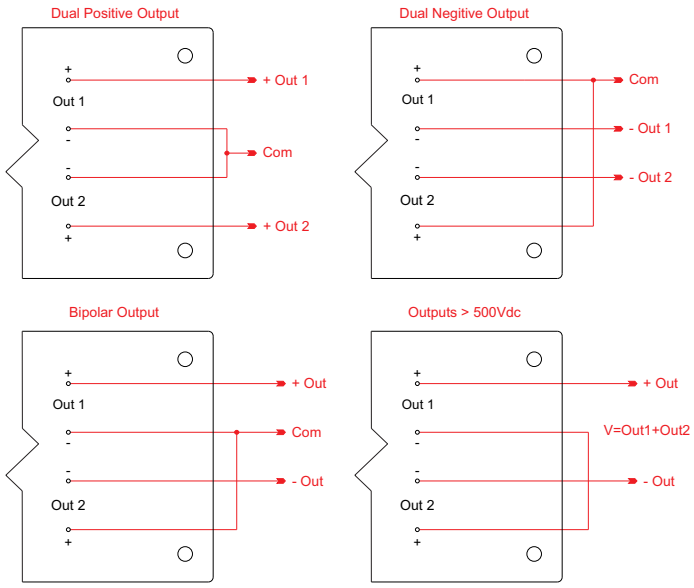

H50 SERIES 50 WATT HIGH VOLTAGE DC/DC CONVERTERS

APPLICATION NOTES

CONNECTION IN PARALLEL

The figure below shows how to connect several single output units with equal nominal output voltage in parallel.

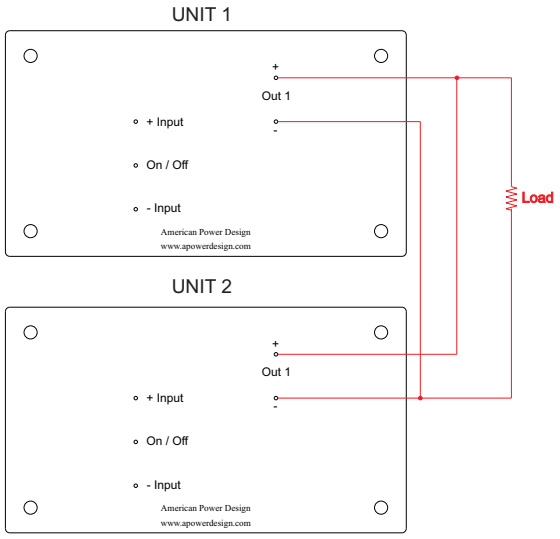

The figure below show how to connect several dual output units with equal nominal output voltage in parallel.

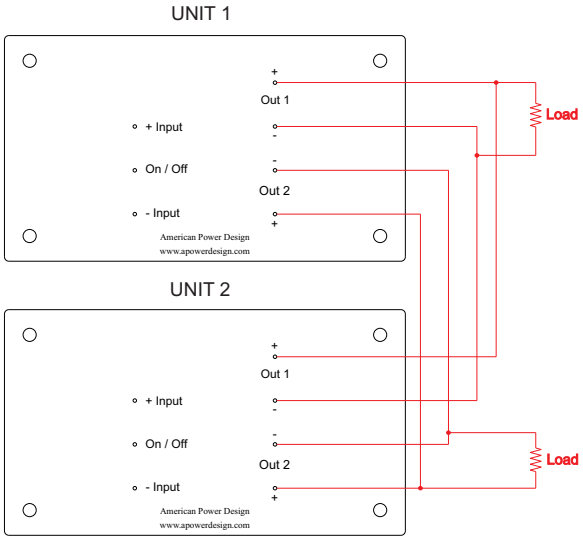

CONNECTION IN SERIES

When connecting units in series, the highest achieved output voltage should remain below the rated isolation voltage.

Figure below shows how to connect multiple single output units in series with the use of shunt diodes.

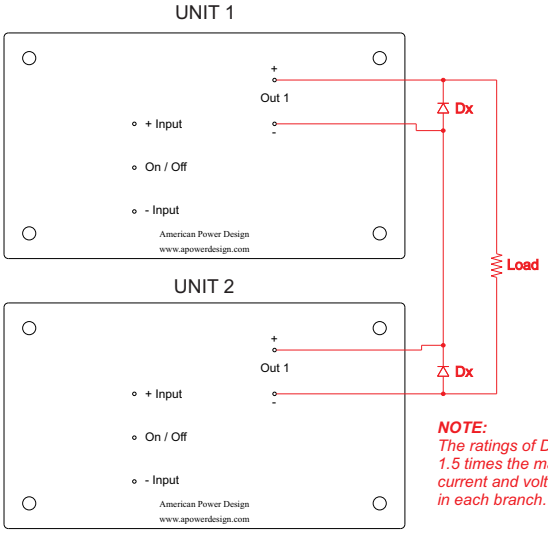

NOTE:
The ratings of Dx should be 1.5 times the maximum current and voltage expected in each branch.

Figure below shows how to connect multiple dual output units in series with the use of shunt diodes.

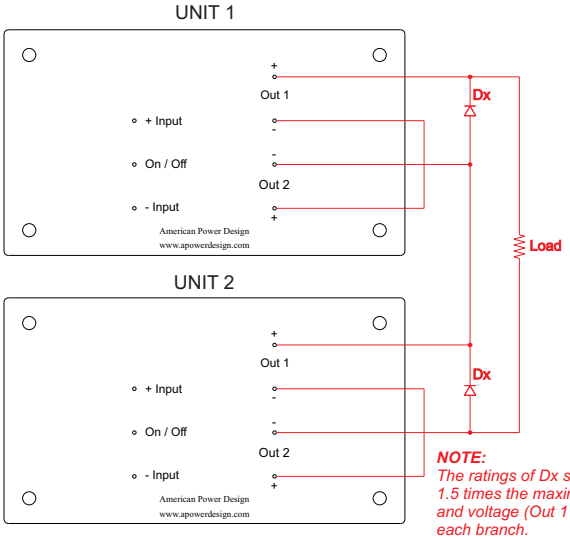

NOTE:
The ratings of Dx should be 1.5 times the maximum current and voltage (Out 1 + Out 2) in each branch.

H50 SERIES 50 WATT HIGH VOLTAGE DC/DC CONVERTERS

APPLICATION NOTES

CLEANING AGENTS

In order to avoid possible damage, any penetration of cleaning fluids must be prevented, since the power supplies are not hermetically sealed.

NUCLEAR AND MEDICAL APPLICATIONS

American Power Design products are not designed, intended for use in, or authorized for use as critical components in life support systems, equipment used in hazardous environments, or nuclear control systems without the express written consent of American Power Design, Inc.

TECHNICAL REVISIONS

The appearance of products, including safety agency certifications pictured on labels, may change depending on the date manufactured. Specifications are subject to change without notice.

SAFETY REQUIREMENTS

The converters are designed to meet North American and International safety regulatory requirements per UL 60950-1/CSA 22.2 No. 60950-1-07 Second Edition, IEC 60950-1: 2005, and EN 60950-1:2006. Basic Insulation is provided between input and output. To comply with safety agencies requirements, an input line fuse must be used external to the converter. The table below provides the recommended fuse rating for use with this family of products.

Input Voltage Range	Fuse Rating
9-36Vdc	9 A
20-60Vdc	4 A

If one input fuse is used for a group of modules, the maximum fuse rating should not exceed 10A.

WARRANTY

All products manufactured by American Power Design, Inc. (APD) are warranted to be free of defects due to material or workmanship for a period of one year from date of shipment. At our option, APD will repair or replace any non-conforming product.
APD expressly disclaims any liability for consequential or incidental damages resulting from the use or misuse of its products by the purchaser or others.
This warranty is in lieu of all warranties expressed or implied, including the warranties of merchantability. No other warranties, obligations, or liabilities are expressed or implied.
All products being returned for repair require a return material authorization(RMA) assigned by APD prior to return shipment.

American Power Design, Inc.

"The best high voltage design solution"

RoHS

H150 SERIES 150 WATT HIGH VOLTAGE DC/DC CONVERTERS

FEATURES

- Customer Selects Output Voltage
- Ultra Wide Input Ranges
  (18-36Vdc , 20-60Vdc)
- Efficiency 91% (typ.)
- Independently Isolated Outputs
- Optional Chassis Mount
- Remote On/Off Control
- Continuous Short Circuit Protection

The H150 Series of DC/DC converters accepts ultra wide input ranges of 18-36 Vdc, and 20-60 Vdc. Outputs are independently isolated. In the case of duals, up to 120 watts may be taken from either output. All models will tolerate a short circuit indefinitely. Also included is a Pi input filter and remote on/off.

ELECTRICAL SPECIFICATIONS

Voltage Accuracy	+/- 4%
Line Regulation	+/- 5%
Load Regulation	(20% to full load) +/- 5%
Output Ripple	< 0.5% P-P
Input Filter	Pi Network
Efficiency	91% (typ.)
Short Circuit Protection	Continuous
Switching Frequency	100 kHz
Isolation (Input-Output(1)-Output(2)-Case)	1000 Vdc
Input / Output Capacitance	< 200pF

GENERAL SPECIFICATIONS

Temp. Stability	+/-0.02%/°C
Temp. (Operating , Case)	-45 to +85°C
Temp. (Storage)	-55 to +100°C
Logic Shutdown	Logic 0 (on)
EMI/RFI	Six Sided Shield
Derating	None
Cooling	Free-Air Convection

PHYSICAL SPECIFICATIONS

Dimensions	3.5 x 5.5 x 0.92 inches
Weight	18.5 Oz
Case Material	Black Coated Metal *(With Non-Conductive Base Plate)*

H150 SERIES 150 WATT HIGH VOLTAGE DC/DC CONVERTERS

REPRESENTATIVE MODEL LISTING							
OUTPUT SPECS				MODEL NUMBER / INPUT RANGE			
VOLTAGE		CURRENT		18-36VDC		20-60VDC	
OUT #1	OUT #2	OUT #1	OUT #2	Non-RoHs	RoHs	Non-RoHs	RoHs
50 Vdc	-	3 A	-	H150-50	H150-50/Y	H150-50/B	H150-50/B/Y
50 Vdc	50Vdc	1.5 A	1.5 A	H150-50/50	H150-50/50/Y	H150-50/50/B	H150-50/50/B/Y
75 Vdc	-	2 A		H150-75	H150-75/Y	H150-75/B	H150-75/B/Y
75 Vdc	75 Vdc	1 A	1 A	H150-75/75	H150-75/75/Y	H150-75/75/B	H150-75/75/B/Y
100 Vdc	-	1.5 A	-	H150-100	H150-100/Y	H150-100/B	H150-100/B/Y
100 Vdc	100Vdc	750 mA	750 mA	H150-100/100	H150-100/100/Y	H150-100/100/B	H150-100/100/B/Y
150 Vdc	-	1 A	-	H150-150	H150-150/Y	H150-150/B	H150-150/B/Y
150 Vdc	150 Vdc	500 mA	500 mA	H150-150/150	H150-150/150/Y	H150-150/150/B	H150-150/150/B/Y
200 Vdc	-	750 mA	-	H150-200	H150-200/Y	H150-200/B	H150-200/B/Y
200 Vdc	200 Vdc	375 mA	375 mA	H150-200/200	H150-200/200/Y	H150-200/200/B	H150-200/200/B/Y
300 Vdc	-	500 mA	-	H150-300	H150-300/Y	H150-300/B	H150-300/B/Y
300 Vdc	300 Vdc	250 mA	250 mA	H150-300/300	H150-300/300/Y	H150-300/300/B	H150-300/300/B/Y
400 Vdc	-	375 mA	-	H150-400	H150-400/Y	H150-400/B	H150-400/B/Y
400 Vdc	400 Vdc	187 mA	187 mA	H150-400/400	H150-400/400/Y	H150-400/400/B	H150-400/400/B/Y
500 Vdc	-	300 mA	-	H150-500	H150-500/Y	H150-500/B	H150-500/B/Y
500 Vdc	500Vdc	150 mA	150 mA	H150-500/500	H150-500/500/Y	H150-500/500/B	H150-500/500/B/Y

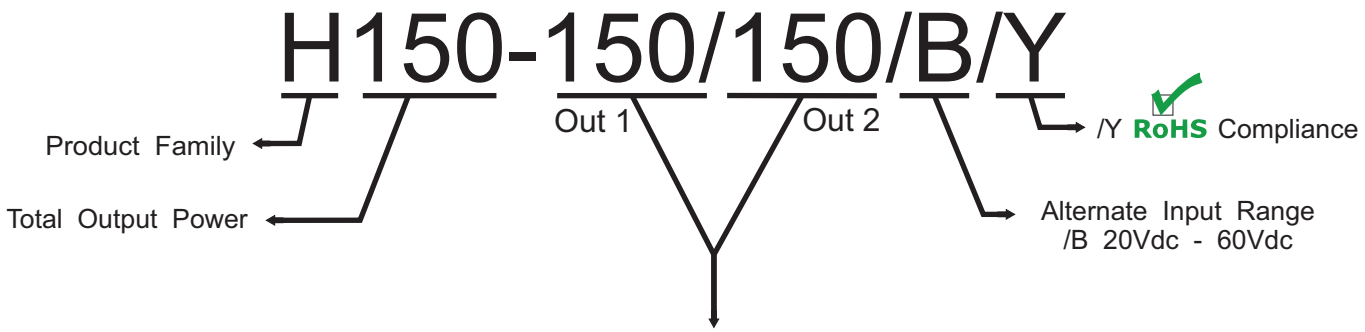

Customer Selects Output Voltage

The H150 Series are designed such that the customer may order any output voltage from 50Vdc to 500Vdc at no additional charge.

H150 SERIES 150 WATT HIGH VOLTAGE DC/DC CONVERTERS

STANDARD PC MOUNT

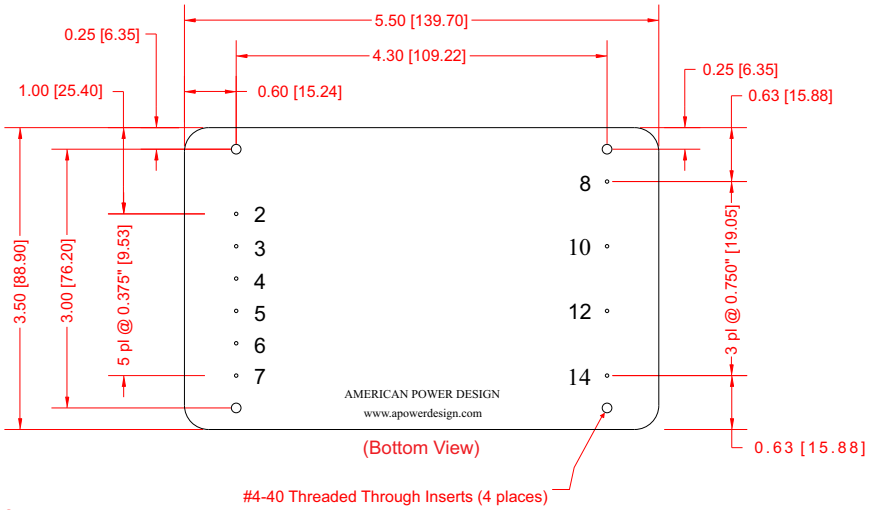

Dimensions are in Inches
[Metric equivalents in brackets]

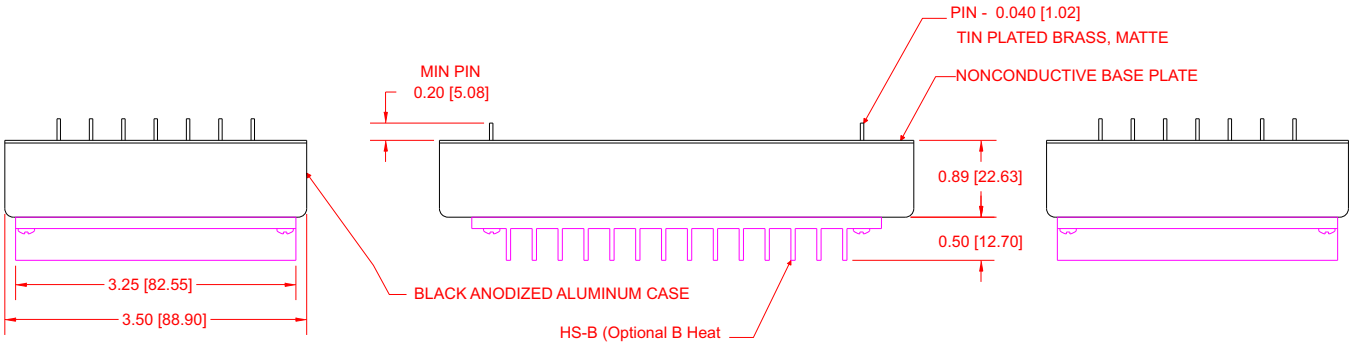

PIN #	FUNCTION		PIN #	FUNCTION	
	Single	Dual		Single	Dual
1	No Pin	No Pin	8	No Pin	Output 2 +
2	- Input	- Input	9	No Pin	No Pin
3	- Input	- Input	10	No Pin	Output 2 -
4	+ Input	+ Input	11	No Pin	No Pin
5	+ Input	+ Input	12	Output 1 +	Output 1 +
6	On / Off	On / Off	13	No Pin	No Pin
7	Case	Case	14	Output 1 -	Output 1 -

H150 SERIES 150 WATT HIGH VOLTAGE DC/DC CONVERTERS

-TS CHASSIS MOUNT OPTION

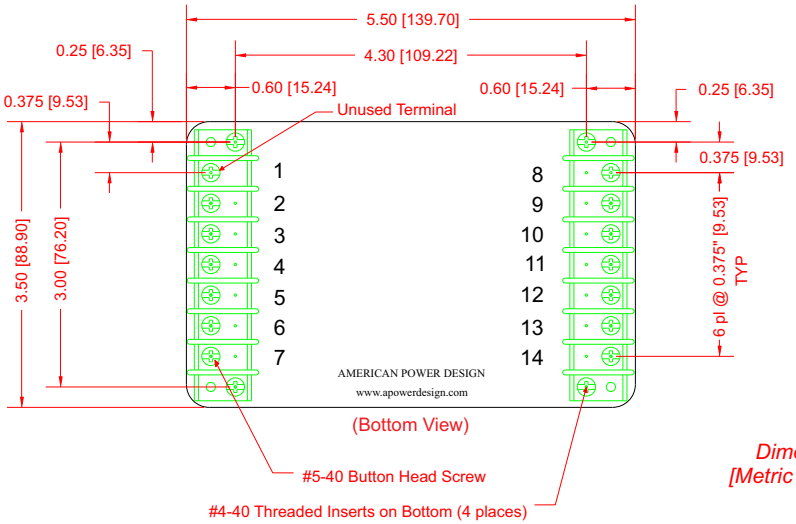

Dimensions are in Inches
[Metric equivalents in brackets]

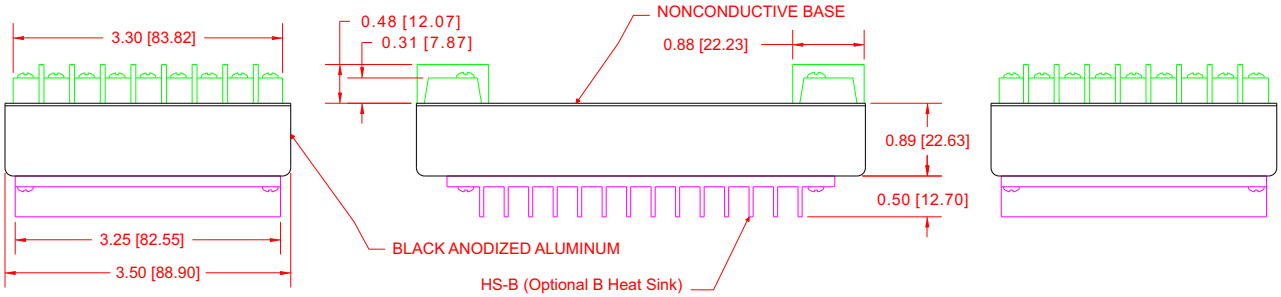

PIN #	FUNCTION		PIN #	FUNCTION	
	Single	Dual		Single	Dual
1	N/C	N/C	8	N/C	Output 2 +
2	- Input	- Input	9	N/C	N/C
3	- Input	- Input	10	N/C	Output 2 -
4	+ Input	+ Input	11	N/C	N/C
5	+ Input	+ Input	12	Output 1 +	Output 1 +
6	On / Off	On / Off	13	N/C	N/C
7	Case	Case	14	Output 1 -	Output 1 -

H150 SERIES 150 WATT HIGH VOLTAGE DC/DC CONVERTERS

APPLICATION NOTES

INPUT AND OUTPUT IMPEDANCE

The H150 Series of power converters have been designed to be stable with no external capacitors when used in low inductance input and output circuits. However, in some applications, the inductance associated with the distribution from the power source to the input of the converter can affect the stability of the converter. The addition of a 100 µF electrolytic capacitor with an ESR <1 Ohm across the input helps ensure stability of the converter. In many applications, the user has to use decoupling capacitance at the load.

SHORT CIRCUIT PROTECTION

The H150 Series is equipped with short circuit protection. The converter will fold-back the input power whenever a short circuit is applied to its output and automatically recover after the overload condition is removed.

ISOLATION

The output(s) of the H150 Series is galvanically isolated from both the input and case, capacitance is < 200 pF and resistance is > 10G Ohm.

In the case of dual's, the outputs are independently isolated from one another as well as the input and case.

RIPPLE AND NOISE

Figure below shows a typical output voltage ripple waveform, measured at full rated load current with no additional output filtering. External low ESR capacitors may be added across output to further reduce ripple.

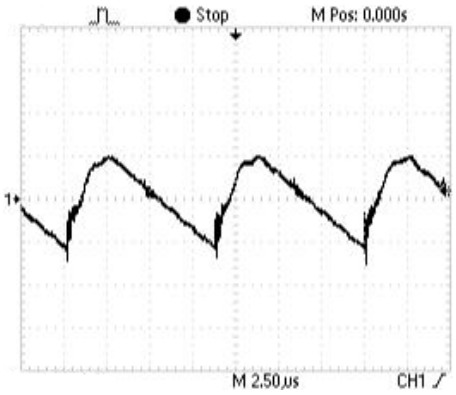

STARTUP TRANSIENT

Figure below shows a typical output voltage during turn-on, measured at 20% load current with no additional output filtering.

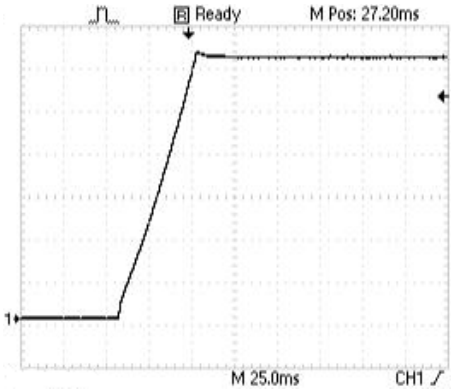

Figure below shows a typical output voltage during turn-on, measured at full rated load current with no additional output filtering.

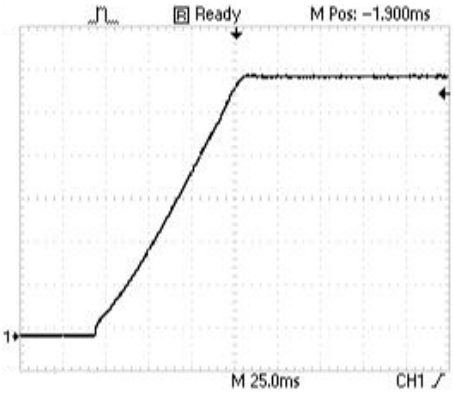

H150 SERIES 150 WATT HIGH VOLTAGE DC/DC CONVERTERS

APPLICATION NOTES

INRUSH CURRENT

The inrush current of the H150 Series has been kept as low as possible. However, a series resistor may be inserted in the input line to limit this current further.

LOAD TRANSIENT

Figure below shows a typical output voltage response, measured during a transition from full rated load current to 20% load current with no additional output filtering.

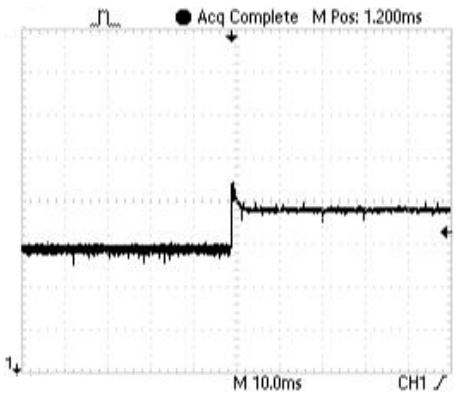

Figure below shows a typical output voltage response, measured during a transition from 20% load current to full rated load current with no additional output filtering.

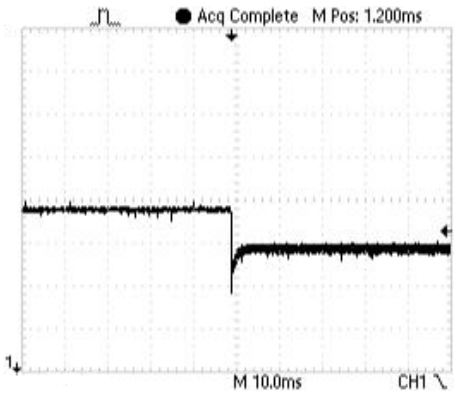

REMOTE ON/OFF CONTROL

The On/Off control pin allows the user to shut down the converter mechanically or logically using a relay or a TTL or CMOS logic signal.

Connect Remote On/Off pin to -Input when not in use to ensure proper operation.

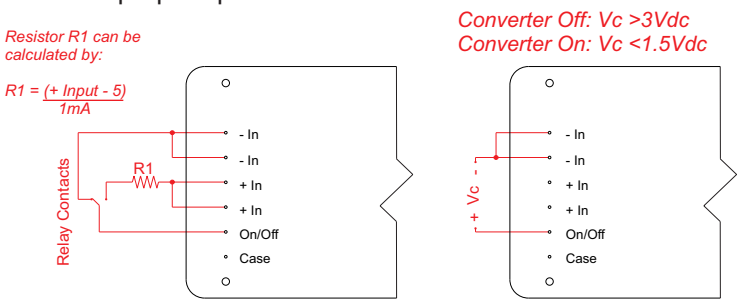

NOTE:
Do not exceed 6Vdc on remote On/Off. otherwise, the supply may be permanently damaged.

OUTPUT CONFIGURATIONS

Due to the unique independently isolated outputs of the H150 series both Output #1 and Output #2 may be connected in a wide variety configurations.
The Figures below are some examples.

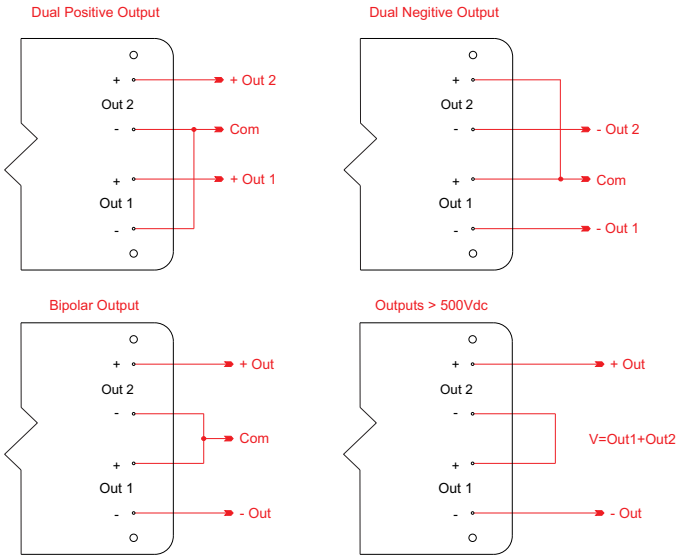

H150 SERIES 150 WATT HIGH VOLTAGE DC/DC CONVERTERS

APPLICATION NOTES

CONNECTION IN PARALLEL

The figure below shows how to connect several single output units with equal nominal output voltage in parallel.

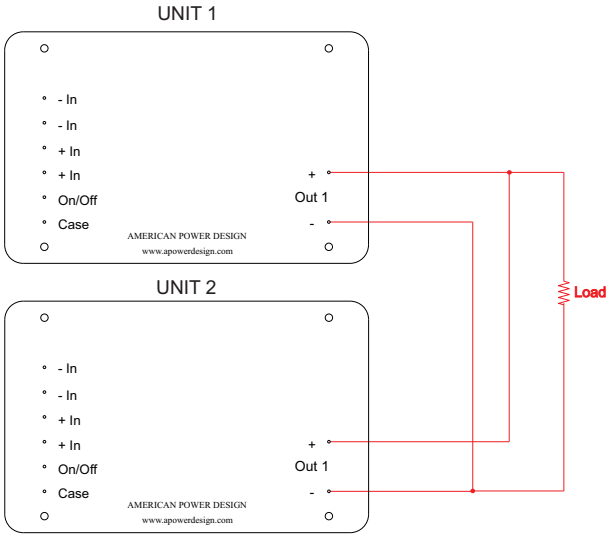

The figure below shows how to connect several dual output units with equal nominal output voltage in parallel.

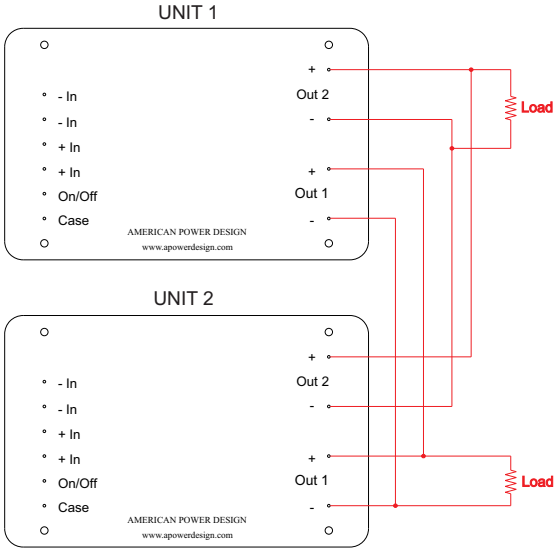

CONNECTION IN SERIES

When connecting units in series, the highest achieved output voltage should remain below the rated isolation voltage.

Figure below shows how to connect multiple single output units in series with the use of shunt diodes.

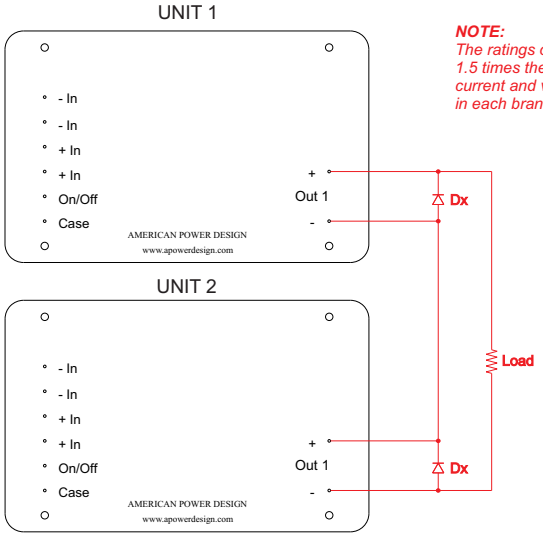

NOTE:
The ratings of Dx should be 1.5 times the maximum current and voltage expected in each branch.

Figure below shows how to connect multiple dual output units in series with the use of shunt diodes.

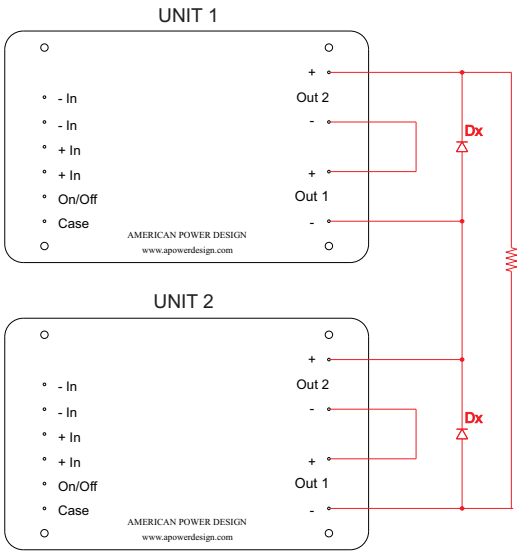

NOTE:
The ratings of Dx should be 1.5 times the maximum current and voltage (Out 1 + Out 2) in each branch.

H150 SERIES 150 WATT HIGH VOLTAGE DC/DC CONVERTERS

APPLICATION NOTES

CLEANING AGENTS

In order to avoid possible damage, any penetration of cleaning fluids must be prevented, since the power supplies are not hermetically sealed.

NUCLEAR AND MEDICAL APPLICATIONS

American Power Design products are not designed, intended for use in, or authorized for use as critical components in life support systems, equipment used in hazardous environments, or nuclear control systems without the express written consent of American Power Design, Inc.

TECHNICAL REVISIONS

The appearance of products, including safety agency certifications pictured on labels, may change depending on the date manufactured. Specifications are subject to change without notice.

SAFETY REQUIREMENTS

The converters are designed to meet North American and International safety regulatory requirements per UL 60950-1/CSA 22.2 No. 60950-1-07 Second Edition, IEC 60950-1: 2005, and EN 60950-1:2006. Basic Insulation is provided between input and output. To comply with safety agencies requirements, an input line fuse must be used external to the converter. The table below provides the recommended fuse rating for use with this family of products.

Input Voltage Range	Fuse Rating
18-36Vdc	12 A
20-60Vdc	10 A

If one input fuse is used for a group of modules, the maximum fuse rating should not exceed 20A.

WARRANTY

All products manufactured by American Power Design, Inc. (APD) are warranted to be free of defects due to material or workmanship for a period of one year from date of shipment. At our option, APD will repair or replace any non-conforming product.
APD expressly disclaims any liability for consequential or incidental damages resulting from the use or misuse of its products by the purchaser or others.
This warranty is in lieu of all warranties expressed or implied, including the warranties of merchantability. No other warranties, obligations, or liabilities are expressed or implied.
All products being returned for repair require a return material authorization(RMA) assigned by APD prior to return shipment.

American Power Design, Inc.

"The best high voltage design solution"

RoHS

J05 SERIES 0.5 WATT PROPORTIONAL HV DC/DC CONVERTERS

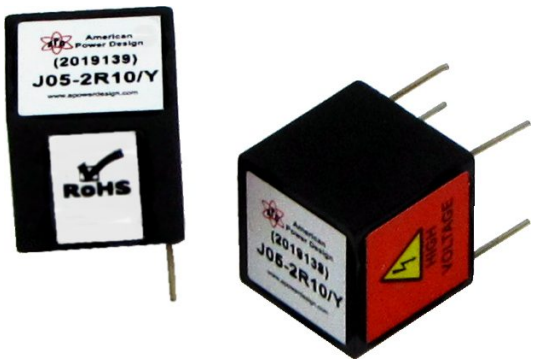

FEATURES

- Customer Selects Output Voltage
- Ultra Miniature 0.125 Cubic Inches
- Single Outputs to + or - 2000 Vdc
- Dual Outputs to +/- 450 Vdc
- High Reliability
- Industry Standard Pinouts
- Temperature Range (-25 to +70°C)
- 400 kHz Switching Frequency
- Continuous Short Circuit Protection

The J05 Series of miniature DC/DC converters offers a 500 Vdc isolated high voltage output directly proportional to input voltage. They are available in industry standard pinouts and a optional shielded case. These miniature converters are ideal for applications requiring minimal size and weight. All models will tolerate a short circuit indefinitely.

ELECTRICAL SPECIFICATIONS

Voltage Accuracy	+/- 5%
Line Regulation	Proportional
Load Regulation	< 15%
Output Ripple	< 0.1% P-P
Startup Voltage	< 0.7Vdc
Input Filter	Low ESR Capacitor
Efficiency	60% (typ.)
Short Circuit Protection	Continuous
Switching Frequency	300 - 500kHz
Output Isolation	500 Vdc
Input / Output Capacitance	< 30pF

GENERAL SPECIFICATIONS

Temp. Stability	+/-0.05%/°C
Temp. (Operating , Case)	-25 to +70°C
Temp. (Storage)	-50 to +105°C
Humidity	0 to 95% (Non-Condensing)
EMI/RFI	Shielded Version Available *(Suffix /S)*
Derating	None
Cooling	Free-Air Convection

PHYSICAL SPECIFICATIONS

Dimensions	0.5 x 0.5 x 0.5 inches
Weight	0.15 Oz
Case Material	Black Phenolic

J05 SERIES 0.5 WATT PROPORTIONAL HV DC/DC CONVERTERS

5V INPUT SINGLE OUTPUTS

REPRESENTATIVE MODEL LISTING							
MODEL NUMBER		INPUT SPECIFICATIONS			OUTPUT SPECIFICATIONS		
Non-RoHs	RoHs	VOLTAGE	NO LOAD	FULL LOAD	VOLTAGE	RIPPLE	CURRENT
J05-5R10	J05-5R10/Y	0V to 5Vdc	<100 mA	<250 mA	0V to 100Vdc	<1% P-P	5 mA
J05-5R15	J05-5R15/Y	0V to 5Vdc	<100 mA	<250 mA	0V to 150Vdc	<0.5% P-P	3.33 mA
J05-5R20	J05-5R20/Y	0V to 5Vdc	<100 mA	<250 mA	0V to 200Vdc	<0.25% P-P	2.5 mA
J05-5R25	J05-5R25/Y	0V to 5Vdc	<100 mA	<250 mA	0V to 250Vdc	<0.25% P-P	2 mA
J05-5R30	J05-5R30/Y	0V to 5Vdc	<100 mA	<250 mA	0V to 300Vdc	<0.25% P-P	1.67 mA
J05-5R35	J05-5R35/Y	0V to 5Vdc	<100 mA	<250 mA	0V to 350Vdc	<0.25% P-P	1.43 mA
J05-5R40	J05-5R40/Y	0V to 5Vdc	<100 mA	<250 mA	0V to 400Vdc	<0.1% P-P	1.25 mA
J05-5R45	J05-5R45/Y	0V to 5Vdc	<100 mA	<250 mA	0V to 450Vdc	<0.15% P-P	1.11 mA
J05-5R50	J05-5R50/Y	0V to 5Vdc	<100 mA	<250 mA	0V to 500Vdc	<0.15% P-P	1 mA
J05-5R60	J05-5R60/Y	0V to 5Vdc	<100 mA	<250 mA	0V to 600Vdc	<0.1% P-P	0.83 mA
J05-5R70	J05-5R70/Y	0V to 5Vdc	<100 mA	<250 mA	0V to 700Vdc	<0.25% P-P	0.72 mA
J05-5R80	J05-5R80/Y	0V to 5Vdc	<100 mA	<250 mA	0V to 800Vdc	<0.3% P-P	0.63 mA
J05-5R90	J05-5R90/Y	0V to 5Vdc	<100 mA	<250 mA	0V to 900Vdc	<0.25% P-P	0.56 mA
J05-5P100	J05-5P100/Y	0V to 5Vdc	<100 mA	<250 mA	0V to +1kVdc	<0.25% P-P	0.5 mA
J05-5N100	J05-5N100/Y	0V to 5Vdc	<100 mA	<250 mA	0V to -1kVdc	<0.25% P-P	0.5 mA
J05-5P120	J05-5P120/Y	0V to 5Vdc	<100 mA	<250 mA	0V to +1.2kVdc	<0.25% P-P	0.42 mA
J05-5N120	J05-5N120/Y	0V to5Vdc	<100 mA	<250 mA	0V to -1.2kVdc	<0.25% P-P	0.42 mA
J05-5P150	J05-5P150/Y	0V to 5Vdc	<100 mA	<250 mA	0V to +1.5kVdc	<0.25% P-P	0.33 mA
J05-5N150	J05-5N150/Y	0V to 5Vdc	<100 mA	<250 mA	0V to -1.5kVdc	<0.25% P-P	0.33 mA
J05-5P200	J05-5P200/Y	0V to 5Vdc	<100 mA	<250 mA	0V to +2kVdc	<0.25% P-P	0.25 mA
J05-5N200	J05-5N200/Y	0V to 5Vdc	<100 mA	<250 mA	0V to -2kVdc	<0.25% P-P	0.25 mA

J05-2N100/S/Y

Product Family

Total Output Power

Input Voltage
- **5** = 0 to 5Vdc Input
- **2** = 0 to 12Vdc Input
- **4** = 0 to 24Vdc Input

Output Polarity
- **R** = Reversible (+ or -)
- **P** = Positive (+ only)
- **N** = Negative (- only)
- **D** = Dual (+ and -)

/Y RoHS Compliance

/S Shield Option

Customer Selects Output Voltage*

The J05 Series are designed such that the customer may order any output voltage from 100Vdc to 2kVdc (Single Outputs) or +/- 50Vdc to +/- 450Vdc (Dual Outputs) at no additional charge.

****ACTUAL OUTPUT VOLTAGE IS 10X***

J05 SERIES 0.5 WATT PROPORTIONAL HV DC/DC CONVERTERS

12V INPUT SINGLE OUTPUTS

REPRESENTATIVE MODEL LISTING							
MODEL NUMBER		INPUT SPECIFICATIONS			OUTPUT SPECIFICATIONS		
Non-RoHs	RoHs	VOLTAGE	NO LOAD	FULL LOAD	VOLTAGE	RIPPLE	CURRENT
J05-2R10	J05-2R10/Y	0V to 12Vdc	<40 mA	<100 mA	0V to 100Vdc	<1% P-P	5 mA
J05-2R15	J05-2R15/Y	0V to 12Vdc	<40 mA	<100 mA	0V to 150Vdc	<0.5% P-P	3.33 mA
J05-2R20	J05-2R20/Y	0V to 12Vdc	<40 mA	<100 mA	0V to 200Vdc	<0.25% P-P	2.5 mA
J05-2R25	J05-2R25/Y	0V to 12Vdc	<40 mA	<100 mA	0V to 250Vdc	<0.25% P-P	2 mA
J05-2R30	J05-2R30/Y	0V to 12Vdc	<40 mA	<100 mA	0V to 300Vdc	<0.25% P-P	1.67 mA
J05-2R35	J05-2R35/Y	0V to 12Vdc	<40 mA	<100 mA	0V to 350Vdc	<0.25% P-P	1.43 mA
J05-2R40	J05-2R40/Y	0V to 12Vdc	<40 mA	<100 mA	0V to 400Vdc	<0.1% P-P	1.25 mA
J05-2R45	J05-2R45/Y	0V to 12Vdc	<40 mA	<100 mA	0V to 450Vdc	<0.15% P-P	1.11 mA
J05-2R50	J05-2R50/Y	0V to 12Vdc	<40 mA	<100 mA	0V to 500Vdc	<0.15% P-P	1 mA
J05-2R60	J05-2R60/Y	0V to 12Vdc	<40 mA	<100 mA	0V to 600Vdc	<0.1% P-P	0.83 mA
J05-2R70	J05-2R70/Y	0V to 12Vdc	<40 mA	<100 mA	0V to 700Vdc	<0.25% P-P	0.72 mA
J05-2R80	J05-2R80/Y	0V to 12Vdc	<40 mA	<100 mA	0V to 800Vdc	<0.3% P-P	0.63 mA
J05-2R90	J05-2R90/Y	0V to 12Vdc	<40 mA	<100 mA	0V to 900Vdc	<0.25% P-P	0.56 mA
J05-2P100	J05-2P100/Y	0V to 12Vdc	<40 mA	<100 mA	0V to +1kVdc	<0.25% P-P	0.5 mA
J05-2N100	J05-2N100/Y	0V to 12Vdc	<40 mA	<100 mA	0V to -1kVdc	<0.25% P-P	0.5 mA
J05-2P120	J05-2P120/Y	0V to 12Vdc	<40 mA	<100 mA	0V to +1.2kVdc	<0.25% P-P	0.42 mA
J05-2N120	J05-2N120/Y	0V to12Vdc	<40 mA	<100 mA	0V to -1.2kVdc	<0.25% P-P	0.42 mA
J05-2P150	J05-2P150/Y	0V to 12Vdc	<40 mA	<100 mA	0V to +1.5kVdc	<0.25% P-P	0.33 mA
J05-2N150	J05-2N150/Y	0V to 12Vdc	<40 mA	<100 mA	0V to -1.5kVdc	<0.25% P-P	0.33 mA
J05-2P200	J05-2P200/Y	0V to 12Vdc	<40 mA	<100 mA	0V to +2kVdc	<0.25% P-P	0.25 mA
J05-2N200	J05-2N200/Y	0V to 12Vdc	<40 mA	<100 mA	0V to -2kVdc	<0.25% P-P	0.25 mA

J05 SERIES 0.5 WATT PROPORTIONAL HV DC/DC CONVERTERS

24V INPUT SINGLE OUTPUTS

REPRESENTATIVE MODEL LISTING							
MODEL NUMBER		INPUT SPECIFICATIONS			OUTPUT SPECIFICATIONS		
Non-RoHs	RoHs	VOLTAGE	NO LOAD	FULL LOAD	VOLTAGE	RIPPLE	CURRENT
J05-4R10	J05-4R10/Y	0V to 24Vdc	<20 mA	<50 mA	0V to 100Vdc	<1% P-P	5 mA
J05-4R15	J05-4R15/Y	0V to 24Vdc	<20 mA	<50 mA	0V to 150Vdc	<0.5% P-P	3.33 mA
J05-4R20	J05-4R20/Y	0V to 24Vdc	<20 mA	<50 mA	0V to 200Vdc	<0.25% P-P	2.5 mA
J05-4R25	J05-4R25/Y	0V to 24Vdc	<20 mA	<50 mA	0V to 250Vdc	<0.25% P-P	2 mA
J05-4R30	J05-4R30/Y	0V to 24Vdc	<20 mA	<50 mA	0V to 300Vdc	<0.25% P-P	1.67 mA
J05-4R35	J05-4R35/Y	0V to 24Vdc	<20 mA	<50 mA	0V to 350Vdc	<0.25% P-P	1.43 mA
J05-4R40	J05-4R40/Y	0V to 24Vdc	<20 mA	<50 mA	0V to 400Vdc	<0.1% P-P	1.25 mA
J05-4R45	J05-4R45/Y	0V to 24Vdc	<20 mA	<50 mA	0V to 450Vdc	<0.15% P-P	1.11 mA
J05-4R50	J05-4R50/Y	0V to 24Vdc	<20 mA	<50 mA	0V to 500Vdc	<0.15% P-P	1 mA
J05-4R60	J05-4R60/Y	0V to 24Vdc	<20 mA	<50 mA	0V to 600Vdc	<0.1% P-P	0.83 mA
J05-4R70	J05-4R70/Y	0V to 24Vdc	<20 mA	<50 mA	0V to 700Vdc	<0.25% P-P	0.72 mA
J05-4R80	J05-4R80/Y	0V to 24Vdc	<20 mA	<50 mA	0V to 800Vdc	<0.3% P-P	0.63 mA
J05-4R90	J05-4R90/Y	0V to 24Vdc	<20 mA	<50 mA	0V to 900Vdc	<0.25% P-P	0.56 mA
J05-4P100	J05-4P100/Y	0V to 24Vdc	<20 mA	<50 mA	0V to +1kVdc	<0.25% P-P	0.5 mA
J05-4N100	J05-4N100/Y	0V to 24Vdc	<20 mA	<50 mA	0V to -1kVdc	<0.25% P-P	0.5 mA
J05-4P120	J05-4P120/Y	0V to 24Vdc	<20 mA	<50 mA	0V to +1.2kVdc	<0.25% P-P	0.42 mA
J05-4N120	J05-4N120/Y	0V to24Vdc	<20 mA	<50 mA	0V to -1.2kVdc	<0.25% P-P	0.42 mA
J05-4P150	J05-4P150/Y	0V to 24Vdc	<20 mA	<50 mA	0V to +1.5kVdc	<0.25% P-P	0.33 mA
J05-4N150	J05-4N150/Y	0V to 24Vdc	<20 mA	<50 mA	0V to -1.5kVdc	<0.25% P-P	0.33 mA
J05-4P200	J05-4P200/Y	0V to 24Vdc	<20 mA	<50 mA	0V to +2kVdc	<0.25% P-P	0.25 mA
J05-4N200	J05-4N200/Y	0V to 24Vdc	<20 mA	<50 mA	0V to -2kVdc	<0.25% P-P	0.25 mA

J05 SERIES 0.5 WATT PROPORTIONAL HV DC/DC CONVERTERS

DUAL OUTPUTS

REPRESENTATIVE MODEL LISTING							
MODEL NUMBER		INPUT SPECIFICATIONS			OUTPUT SPECIFICATIONS		
Non-RoHs	RoHs	VOLTAGE	NO LOAD	FULL LOAD	VOLTAGE	RIPPLE	CURRENT
J05-5D5	J05-5D5/Y	0V to 5Vdc	<100 mA	<250 mA	0V to +/-50Vdc	<1% P-P	5 mA
J05-2D5	J05-2D5/Y	0V to 12Vdc	<40 mA	<100 mA	0V to +/-50Vdc	<1% P-P	5 mA
J05-4D5	J05-4D5/Y	0V to 24Vdc	<20 mA	<50 mA	0V to +/-50Vdc	<1% P-P	5 mA
J05-5D10	J05-5D10/Y	0V to 5Vdc	<100 mA	<250 mA	0V to +/-100Vdc	<0.25% P-P	2.5 mA
J05-2D10	J05-2D10/Y	0V to 12Vdc	<40 mA	<100 mA	0V to +/-100Vdc	<0.25% P-P	2.5 mA
J05-4D10	J05-4D10/Y	0V to 24Vdc	<20 mA	<50 mA	0V to +/-100Vdc	<0.25% P-P	2.5 mA
J05-5D15	J05-5D15/Y	0V to 5Vdc	<100 mA	<250 mA	0V to +/-150Vdc	<0.25% P-P	1.67 mA
J05-2D15	J05-2D15/Y	0V to 12Vdc	<40 mA	<100 mA	0V to +/-150Vdc	<0.25% P-P	1.67 mA
J05-4D15	J05-4D15/Y	0V to 24Vdc	<20 mA	<50 mA	0V to +/-150Vdc	<0.25% P-P	1.67 mA
J05-5D20	J05-5D20/Y	0V to 5Vdc	<100 mA	<250 mA	0V to +/-200Vdc	<0.1% P-P	1.25 mA
J05-2D20	J05-2D20/Y	0V to 12Vdc	<40 mA	<100 mA	0V to +/-200Vdc	<0.1% P-P	1.25 mA
J05-4D20	J05-4D20/Y	0V to 24Vdc	<20 mA	<50 mA	0V to +/-200Vdc	<0.1% P-P	1.25 mA
J05-5D25	J05-5D25/Y	0V to 5Vdc	<100 mA	<250 mA	0V to +/-250Vdc	<0.15% P-P	1 mA
J05-2D25	J05-2D25/Y	0V to 12Vdc	<40 mA	<100 mA	0V to +/-250Vdc	<0.15% P-P	1 mA
J05-4D25	J05-4D25/Y	0V to 24Vdc	<20 mA	<50 mA	0V to +/-250Vdc	<0.15% P-P	1 mA
J05-5D30	J05-5D30/Y	0V to 5Vdc	<100 mA	<250 mA	0V to +/-300Vdc	<0.1% P-P	0.83 mA
J05-2D30	J05-2D30/Y	0V to 12Vdc	<40 mA	<100 mA	0V to +/-300Vdc	<0.1% P-P	0.83 mA
J05-4D30	J05-4D30/Y	0V to 24Vdc	<20 mA	<50 mA	0V to +/-300Vdc	<0.1% P-P	0.83 mA
J05-5D35	J05-5D35/Y	0V to 5Vdc	<100 mA	<250 mA	0V to +/-350Vdc	<0.25% P-P	0.72 mA
J05-2D35	J05-2D35/Y	0V to 12Vdc	<40 mA	<100 mA	0V to +/-350Vdc	<0.25% P-P	0.72 mA
J05-4D35	J05-4D35/Y	0V to 24Vdc	<20 mA	<50 mA	0V to +/-350Vdc	<0.25% P-P	0.72 mA
J05-5D40	J05-5D40/Y	0V to 5Vdc	<100 mA	<250 mA	0V to +/-400Vdc	<0.3% P-P	0.63 mA
J05-2D40	J05-2D40/Y	0V to 12Vdc	<40 mA	<100 mA	0V to +/-400Vdc	<0.3% P-P	0.63 mA
J05-4D40	J05-4D40/Y	0V to 24Vdc	<20 mA	<50 mA	0V to +/-400Vdc	<0.3% P-P	0.63 mA
J05-5D45	J05-5D45/Y	0V to 5Vdc	<100 mA	<250 mA	0V to +/-450Vdc	<0.25% P-P	0.56 mA
J05-2D45	J05-2D45/Y	0V to 12Vdc	<40 mA	<100 mA	0V to +/-450Vdc	<0.25% P-P	0.56 mA
J05-4D45	J05-4D45/Y	0V to 24Vdc	<20 mA	<50 mA	0V to +/-450Vdc	<0.25% P-P	0.56 mA

NOTE: *Ripple on dual output units are measured between the positive and negative output pins.*

J05 SERIES 0.5 WATT PROPORTIONAL HV DC/DC CONVERTERS

STANDARD

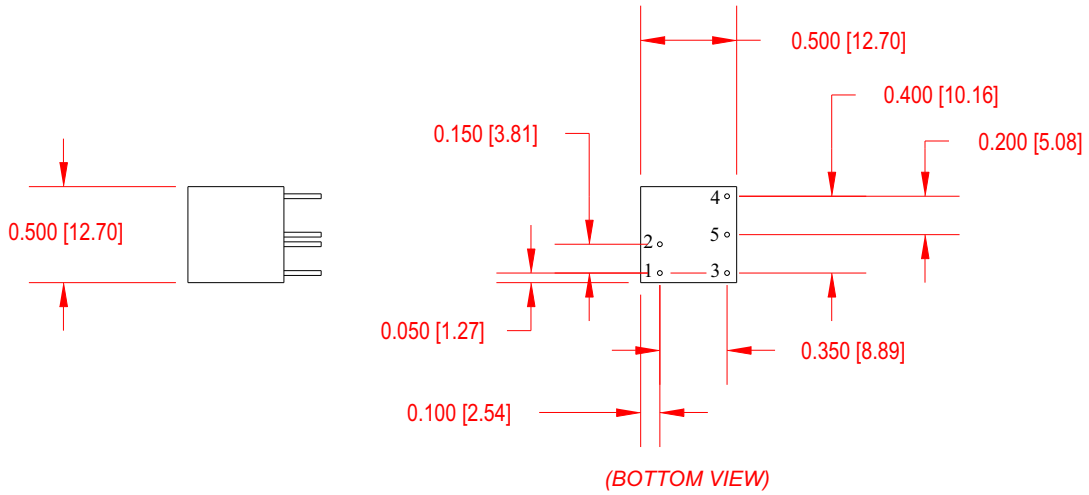

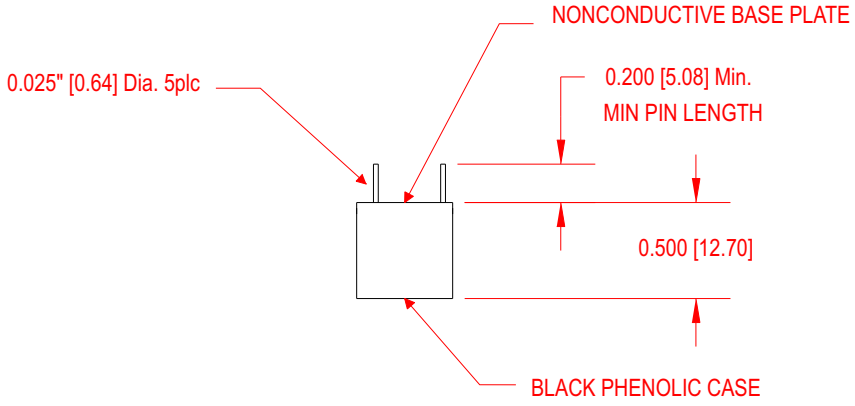

PIN #	100V TO 900V OUTPUTS	DUAL OUTPUTS	1KV TO 2KV OUTPUTS
1	- INPUT	- INPUT	- INPUT
2	+ INPUT	+ INPUT	+ INPUT
3	+ OUTPUT	+ OUTPUT	HV OUT
4	- OUTPUT	- OUTPUT	HV RTN
5	NO PIN	COM	NO PIN

Dimensions are in Inches
[Metric equivalents in brackets]

J05 SERIES 0.5 WATT PROPORTIONAL HV DC/DC CONVERTERS

SHIELD OPTION (/S)

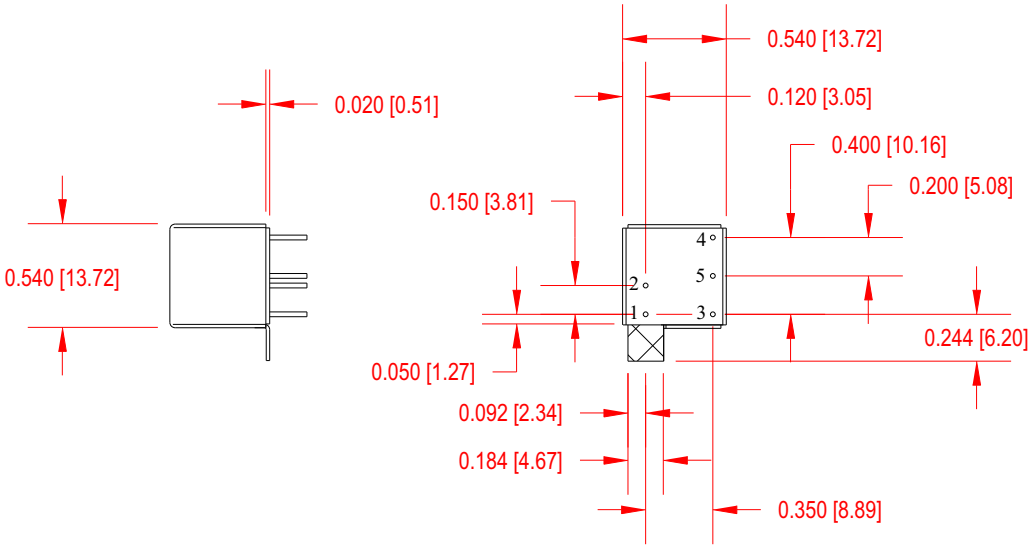

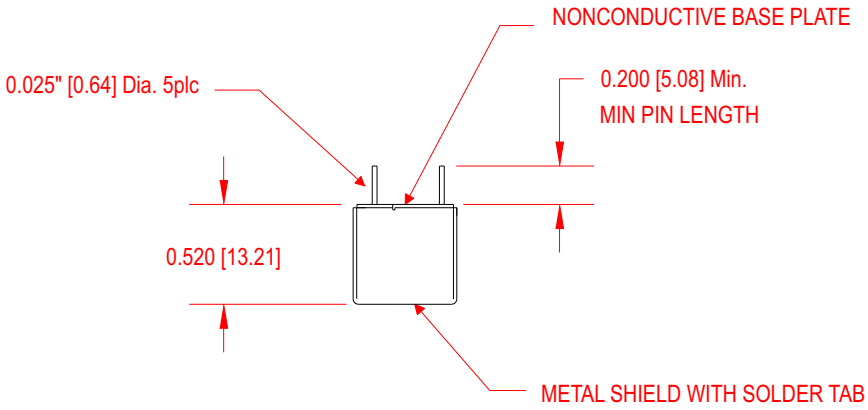

PIN #	100V TO 900V OUTPUTS	DUAL OUTPUTS	1KV TO 2KV OUTPUTS
1	- INPUT	- INPUT	- INPUT
2	+ INPUT	+ INPUT	+ INPUT
3	+ OUTPUT	+ OUTPUT	HV OUT
4	- OUTPUT	- OUTPUT	HV RTN
5	NO PIN	COM	NO PIN

Dimensions are in Inches
[Metric equivalents in brackets]

J05 SERIES 0.5 WATT PROPORTIONAL HV DC/DC CONVERTERS

APPLICATION NOTES

INPUT AND OUTPUT IMPEDANCE

The J05 Series of power converters have been designed to be stable with no external capacitors when used in low inductance input and output circuits. However, in some applications, the inductance associated with the distribution from the power source to the input of the converter can affect the stability of the converter. The addition of a 10 µF electrolytic capacitor with an ESR <1 Ohm across the input helps ensure stability of the converter. In some applications, the user may need to use decoupling capacitance at the load.

SHORT CIRCUIT PROTECTION

The J05 Series is equipped with short circuit protection. The converter will fold-back the input power whenever a short circuit is applied to its output and automatically recover after the overload condition is removed.

ISOLATION

The output of the J05 Series is galvanically isolated from the input, capacitance is < 30pF and resistance is > 10G Ohm. For dual output units Isolation is from Com output pin (5) and -Input (1).

RIPPLE AND NOISE

Figure below shows a typical output voltage ripple waveform, measured at full rated load current with no additional output filtering. External low ESR capacitors may be added across output to further reduce ripple.

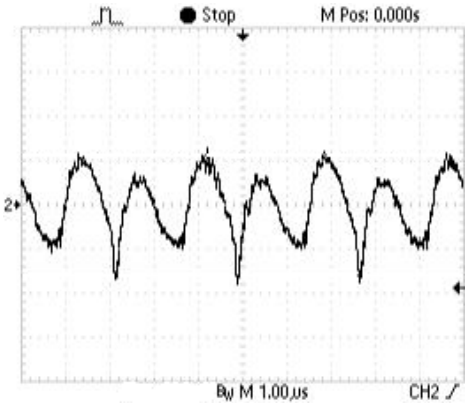

STARTUP TRANSIENT

Figure below shows a typical output voltage during turn-on, measured at no load current with no additional output filtering.

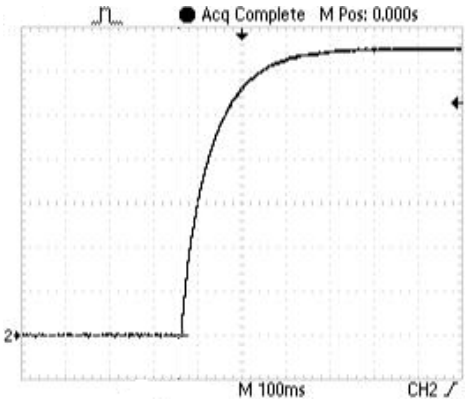

Figure below shows a typical output voltage during turn-on, measured at full rated load current with no additional output filtering.

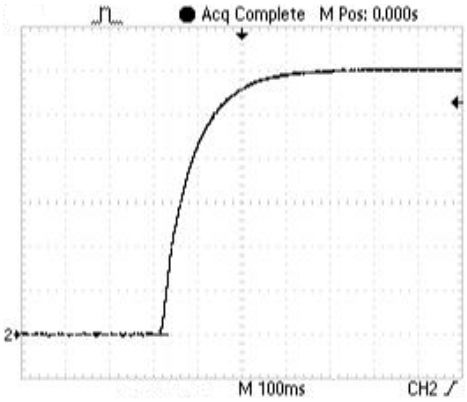

J05 SERIES 0.5 WATT PROPORTIONAL HV DC/DC CONVERTERS

APPLICATION NOTES

INRUSH CURRENT

The inrush current of the J05 Series has been kept as low as possible. However, a series resistor may be inserted in the input line to limit this current further.

LOAD TRANSIENT

Figure below shows a typical output voltage response, measured during a transition from full rated load current to no load current with no additional output filtering.

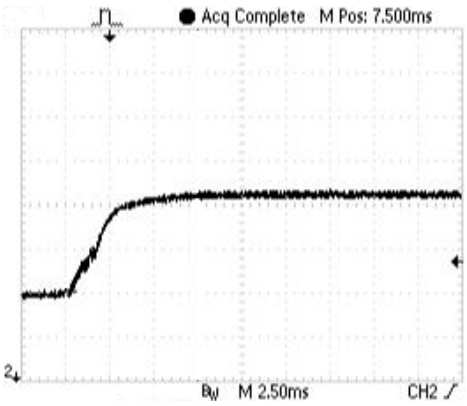

Figure below shows a typical output voltage response, measured during a transition from no load current to full rated load current with no additional output filtering.

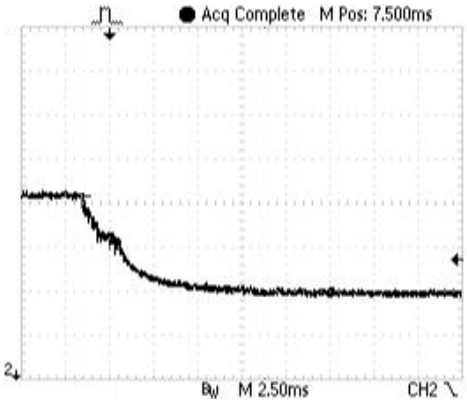

CONNECTION IN PARALLEL

The figures below shows how to connect outputs of several units with equal nominal output voltage in parallel with the use of oring diodes.

POSITIVE OUTPUT

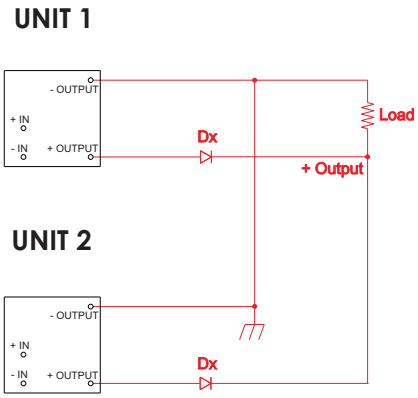

NEGATIVE OUTPUT

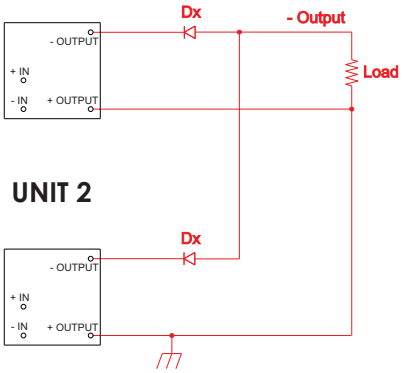

NOTE:
The ratings of Dx should be 1.5 times the maximum current and voltage expected in each branch.

J05 SERIES 0.5 WATT PROPORTIONAL HV DC/DC CONVERTERS

CONNECTION IN SERIES

Figures below shows how to connect multiple outputs in series with the use of shunt diodes, taking into consideration that the highest achieved output voltage should remain below the rated isolation voltage.

POSITIVE OUTPUT

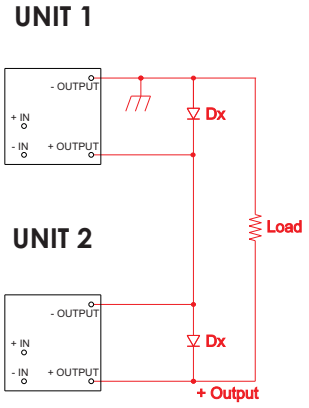

NEGATIVE OUTPUT

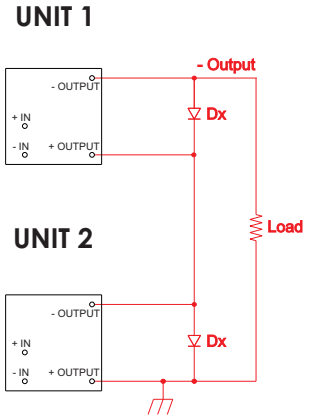

DUAL OUTPUT

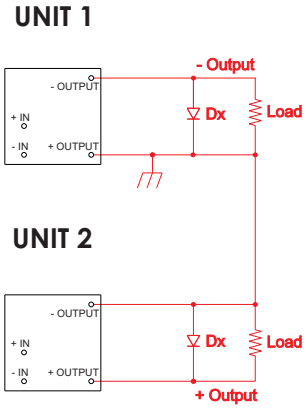

NOTE:
The ratings of Dx should be 1.5 times the maximum current and voltage expected in each branch.

J05 SERIES 0.5 WATT PROPORTIONAL HV DC/DC CONVERTERS

APPLICATION NOTES

POSITIVE OR NEGATIVE OUTPUTS

Isolated DC-DC voltage converters can provide positive or negative voltages from a single device.

Isolated DC-DC converters may also be used with either a positive or a negative input voltage source, as long as the relative polarity of the input to the device is maintained.

The figures below show the various polarity combinations and how to connect the converter to provide them relative to ground.

POSITIVE SOURCE WITH A POSITIVE OUTPUT

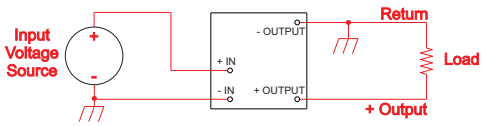

POSITIVE SOURCE WITH A NEGATIVE OUTPUT

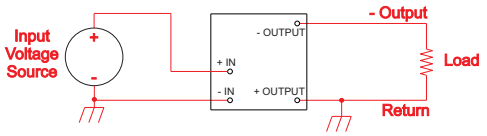

NEGATIVE SOURCE WITH A POSITIVE OUTPUT

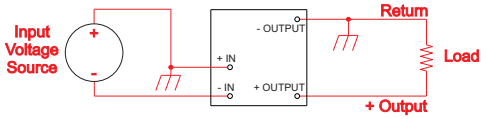

NEGATIVE SOURCE WITH A NEGATIVE OUTPUT

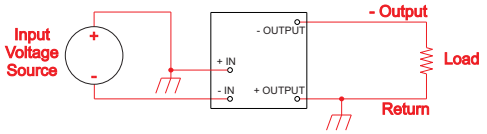

CONNECTIONS FOR DUAL OUTPUTS

Isolation on a dual output converter is from Com output pin (5) and -Input (2) and therefore ground connection on the output is to Com pin only.

The figures below shows how to power a dual output converter with either a positive or a negative input voltage source.

POSITIVE VOLTAGE SOURCE

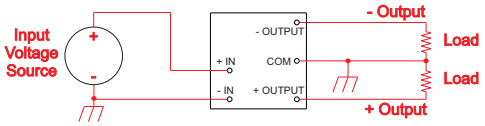

NEGATIVE VOLTAGE SOURCE

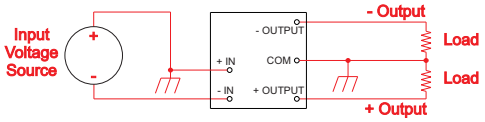

NOTE:
The (- In) must be kept negative with respect to the (+In) pin. If this polarity is reversed, permanent damage to the converter may occur.

J05 SERIES 0.5 WATT PROPORTIONAL HV DC/DC CONVERTERS

APPLICATION NOTES

CLEANING AGENTS

In order to avoid possible damage, any penetration of cleaning fluids must be prevented, since the power supplies are not hermetically sealed.

NUCLEAR AND MEDICAL APPLICATIONS

American Power Design products are not designed, intended for use in, or authorized for use as critical components in life support systems, equipment used in hazardous environments, or nuclear control systems without the express written consent of American Power Design, Inc.

TECHNICAL REVISIONS

The appearance of products, including safety agency certifications pictured on labels, may change depending on the date manufactured. Specifications are subject to change without notice.

SAFETY REQUIREMENTS

The converters are designed to meet North American and International safety regulatory requirements per UL 60950-1/CSA 22.2 No. 60950-1-07 Second Edition, IEC 60950-1: 2005, and EN 60950-1:2006. Basic Insulation is provided between input and output. To comply with safety agencies requirements, an input line fuse must be used external to the converter. The table below provides the recommended fuse rating for use with this family of products.

Input Voltage Range	Fuse Rating
0 to 5Vdc	1A
0 to12Vdc	0.5A
0 to 24Vdc	0.2A

If one input fuse is used for a group of modules, the maximum fuse rating should not exceed 5A.

WARRANTY

All products manufactured by American Power Design, Inc. (APD) are warranted to be free of defects due to material or workmanship for a period of one year from date of shipment. At our option, APD will repair or replace any non-conforming product.
APD expressly disclaims any liability for consequential or incidental damages resulting from the use or misuse of its products by the purchaser or others.
This warranty is in lieu of all warranties expressed or implied, including the warranties of merchantability. No other warranties, obligations, or liabilities are expressed or implied.
All products being returned for repair require a return material authorization(RMA) assigned by APD prior to return shipment.

American Power Design, Inc.

"The best high voltage design solution"

RoHS

J5 SERIES 5 WATT PROPORTIONAL HV DC/DC CONVERTERS

FEATURES

- Customer Selects Output Voltage
- Single Outputs to + or - 6000 Vdc
- Dual Outputs to +/- 3000 Vdc
- High Reliability
- Industry Standard Pinouts
- Wide Temperature Range (-25 to +85°C)
- 80 kHz Switching Frequency
- 3500 Vdc Output Isolation
- Continuous Short Circuit Protection

The J5 Series of miniature DC/DC converters offers a 3500 Vdc isolated high voltage output directly proportional to input voltage. They are available in industry standard pinouts. All models will tolerate a short circuit indefinitely.

ELECTRICAL SPECIFICATIONS

Voltage Accuracy	+/- 3%
Line Regulation	Proportional
Load Regulation	< 10%
Output Ripple	< 2% P-P
Startup Voltage	< 0.7Vdc
Input Filter	Low ESR Capacitor
Efficiency	65% (typ.)
Short Circuit Protection	Continuous
Switching Frequency	80 kHz
Output Isolation	3500 Vdc
Input / Output Capacitance	< 30pF

GENERAL SPECIFICATIONS

Temp. Stability	+/-0.05%/°C
Temp. (Operating , Case)	-25 to +85°C
Temp. (Storage)	-40 to +100°C
Humidity	0 to 95% (Non-Condensing)
EMI/RFI	Shielded Version Available *(Suffix /S)*
Derating	None
Cooling	Free-Air Convection

PHYSICAL SPECIFICATIONS

Dimensions	1.5 x 1.5 x 0.63 inches
Weight	1.5 Oz
Case Material	Black Phenolic

Tel (888) 894-4446 WWW.APOWERDESIGN.COM Fax (603) 898-6534

J5 SERIES 5 WATT PROPORTIONAL HV DC/DC CONVERTERS

SINGLE OUTPUTS

REPRESENTATIVE MODEL LISTING							
MODEL NUMBER		INPUT SPECIFICATIONS			OUTPUT SPECIFICATIONS		
Non-RoHs	RoHs	VOLTAGE	NO LOAD	FULL LOAD	VOLTAGE	RIPPLE	CURRENT
J5-10	J5-10/Y	0V - 12Vdc	<90 mA	<700 mA	0V- 100Vdc	<0.5% (0.5V p-p)	50 mA
J5-20	J5-20/Y	0V - 12Vdc	<90 mA	<700 mA	0V- 200Vdc	<0.3% (0.6V p-p)	25 mA
J5-30	J5-30/Y	0V - 12Vdc	<90 mA	<700 mA	0V - 300Vdc	<0.2% (0.6V p-p)	16 mA
J5-40	J5-40/Y	0V - 12Vdc	<90 mA	<700 mA	0V- 400Vdc	<0.2% (0.8V p-p)	12.5 mA
J5-50	J5-50/Y	0V - 12Vdc	<90 mA	<720 mA	0V - 500Vdc	<0.1% (0.5V p-p)	10 mA
J5-60	J5-60/Y	0V - 12Vdc	<90 mA	<720 mA	0V- 600Vdc	<0.1% (0.6V p-p)	8.3 mA
J5-80	J5-80/Y	0V - 12Vdc	<110 mA	<720 mA	0V- 800Vdc	<0.1% (0.8V p-p)	6.3 mA
J5-100	J5-100/Y	0V - 12Vdc	<120 mA	<720 mA	0V- 1kVdc	<0.1% (1V p-p)	5.0 mA
J5-120	J5-120/Y	0V - 12Vdc	<120 mA	<730 mA	0V- 1.2kVdc	<0.1% (1.2V p-p)	4.2 mA
J5-140	J5-140/Y	0V - 12Vdc	<120 mA	<730 mA	0V- 1.4kVdc	<0.5% (7V p-p)	3.6 mA
J5-150	J5-150/Y	0V - 12Vdc	<120 mA	<730 mA	0V - 1.5kVdc	<0.5% (7.5V p-p)	3.3 mA
J5-160	J5-160/Y	0V - 12Vdc	<120 mA	<730 mA	0V- 1.6kVdc	<0.5% (8V p-p)	3.1 mA
J5-180	J5-180/Y	0V - 12Vdc	<120 mA	<730 mA	0V- 1.8kVdc	<0.5% (9V p-p)	2.8 mA
J5-200	J5-200/Y	0V - 12Vdc	<120 mA	<730 mA	0V- 2kVdc	<0.5% (10V p-p)	2.5 mA
J5-220	J5-220/Y	0V - 12Vdc	<130 mA	<730 mA	0V- 2.2kVdc	<0.5% (11V p-p)	2.3 mA
J5-240	J5-240/Y	0V - 12Vdc	<130 mA	<730 mA	0V- 2.4kVdc	<0.5% (12V p-p)	2.1 mA
J5-250	J5-250/Y	0V - 12Vdc	<130 mA	<740 mA	0V - 2.5kVdc	<0.5% (12.5V p-p)	2.0 mA
J5-260	J5-260/Y	0V - 12Vdc	<130 mA	<740 mA	0V - 2.6kVdc	<0.5% (13V p-p)	1.9 mA
J5-280	J5-280/Y	0V - 12Vdc	<130 mA	<740 mA	0V- 2.8kVdc	<0.5% (14V p-p)	1.8 mA
J5-300	J5-300/Y	0V - 12Vdc	<130 mA	<740 mA	0V - 3kVdc	<0.5% (15V p-p)	1.7 mA
J5-400	J5-400/Y	0V - 12Vdc	<140 mA	<750 mA	0V - 4kVdc	<1% (40V p-p)	1.25 mA
J5-500	J5-500/Y	0V - 12Vdc	<150 mA	<760 mA	0V - 5kVdc	<2% (100V p-p)	1.0 mA
J5-600	J5-600/Y	0V - 12Vdc	<150 mA	<760 mA	0V- 6kVdc	<2% (120V p-p)	0.83 mA

J5 SERIES 5 WATT PROPORTIONAL HV DC/DC CONVERTERS

DUAL OUTPUTS

REPRESENTATIVE MODEL LISTING							
MODEL NUMBER		INPUT SPECIFICATIONS			OUTPUT SPECIFICATIONS		
Non-RoHs	RoHs	VOLTAGE	NO LOAD	FULL LOAD	VOLTAGE	RIPPLE	CURRENT
J5-D5	J5-D5/Y	0V - 12Vdc	<90 mA	<700 mA	0V - +/-50Vdc	<1% (0.5V p-p)	50 mA
J5-D10	J5-D10/Y	0V - 12Vdc	<90 mA	<700 mA	0V - +/-100Vdc	<0.6% (0.6V p-p)	25 mA
J5-D15	J5-D15/Y	0V - 12Vdc	<90 mA	<700 mA	0V - +/-150Vdc	<0.4% (0.6V p-p)	16 mA
J5-D20	J5-D20/Y	0V - 12Vdc	<90 mA	<700 mA	0V - +/-200Vdc	<0.4% (0.8V p-p)	12.5 mA
J5-D25	J5-D25/Y	0V - 12Vdc	<90 mA	<720 mA	0V - +/-250Vdc	<0.2% (0.5V p-p)	10 mA
J5-D30	J5-D30/Y	0V - 12Vdc	<90 mA	<720mA	0V - +/-300Vdc	<0.2% (0.6V p-p)	8.3 mA
J5-D50	J5-D50/Y	0V - 12Vdc	<120 mA	<720 mA	0V - +/-500Vdc	<0.2% (1V p-p)	5.0 mA
J5-D60	J5-D60/Y	0V - 12Vdc	<120 mA	<730 mA	0V - +/-600Vdc	<0.2% (1.2V p-p)	4.2 mA
J5-D75	J5-D75/Y	0V - 12Vdc	<120 mA	<730 mA	0V - +/-750Vdc	<1% (7.5V p-p)	3.3 mA
J5-D100	J5-D100/Y	0V - 12Vdc	<120 mA	<730 mA	0V - +/-1kVdc	<1% (10V p-p)	2.5 mA
J5-D125	J5-D125/Y	0V - 12Vdc	<130 mA	<740 mA	0V - +/-1.25kVdc	<1% (12.5V p-p)	2.0 mA
J5-D150	J5-D150/Y	0V - 12Vdc	<130 mA	<740 mA	0V - +/-1.5kVdc	<1% (15V p-p)	1.7 mA
J5-D200	J5-D200/Y	0V - 12Vdc	<140 mA	<750 mA	0V - +/-2kVdc	<2% (40V p-p)	1.25 mA
J5-D250	J5-D250/Y	0V - 12Vdc	<150 mA	<760 mA	0V - +/-2.5kVdc	<4% (100V p-p)	1.0 mA
J5-D300	J5-D300/Y	0V - 12Vdc	<150 mA	<760 mA	0V - +/-3kVdc	<4% (120V p-p)	0.83 mA

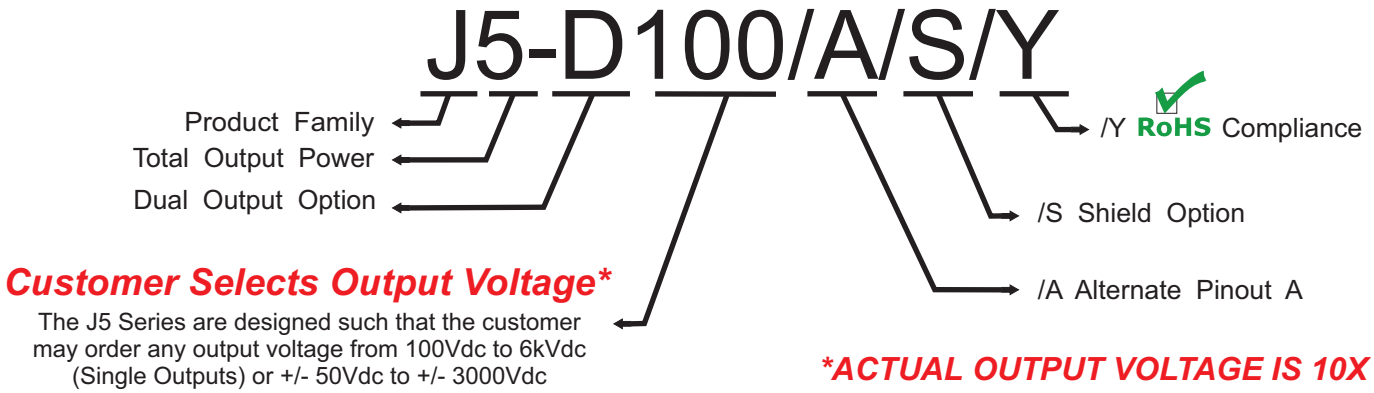

NOTE:
Ripple on dual output units are measured between the positive and negative output pins.

J5 SERIES 5 WATT PROPORTIONAL HV DC/DC CONVERTERS

STANDARD & ALTERNATE (/A)

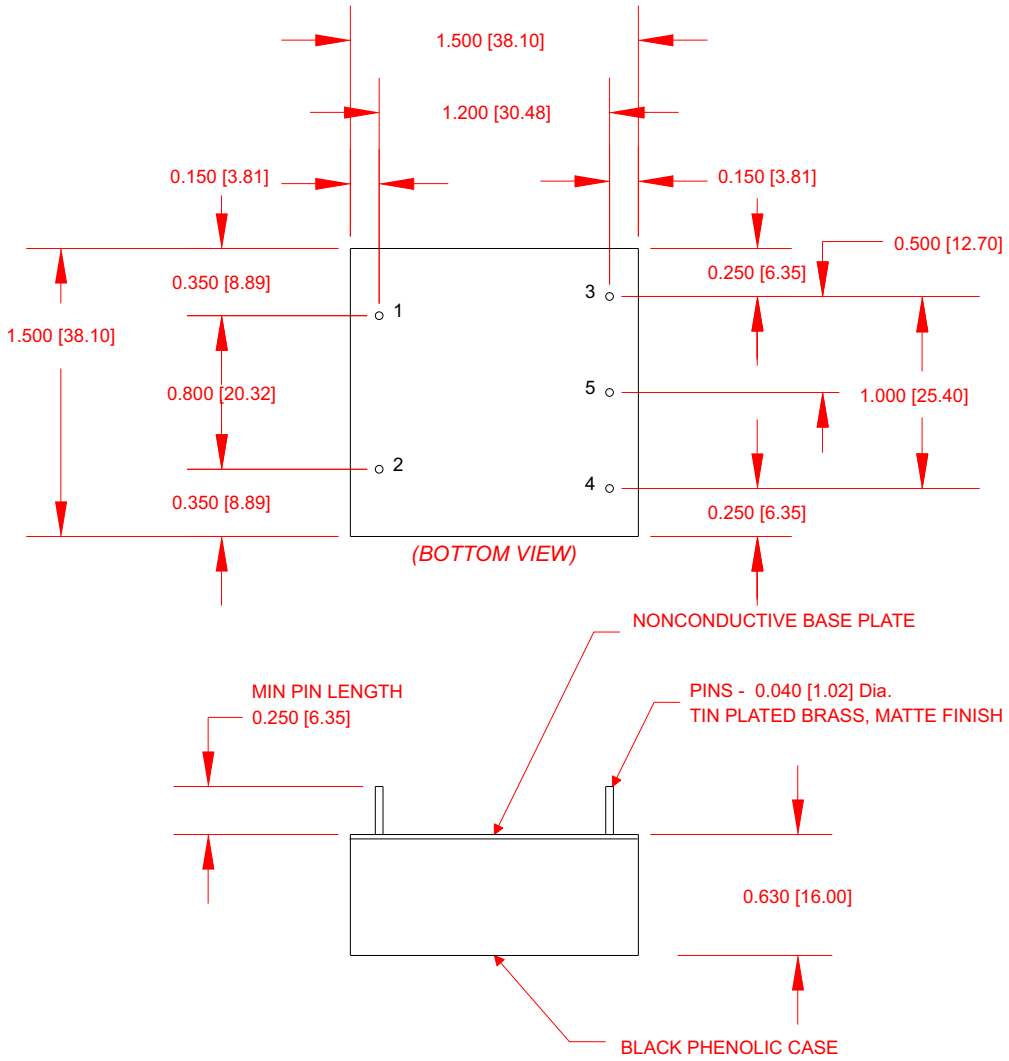

PIN #	STANDARD		ALTERNATE (/A)	
	Single	Dual	Single	Dual
1	+ Input	+ Input	+ Input	+ Input
2	- Input	- Input	- Input	- Input
3	- Output	- Output	+Output	+ Output
4	+ Output	+ Output	- Output	- Output
5	No Pin	Com	No Pin	Com

Dimensions are in Inches
[Metric equivalents in brackets]

J5 SERIES 5 WATT PROPORTIONAL HV DC/DC CONVERTERS

SHIELD OPTION (/S)

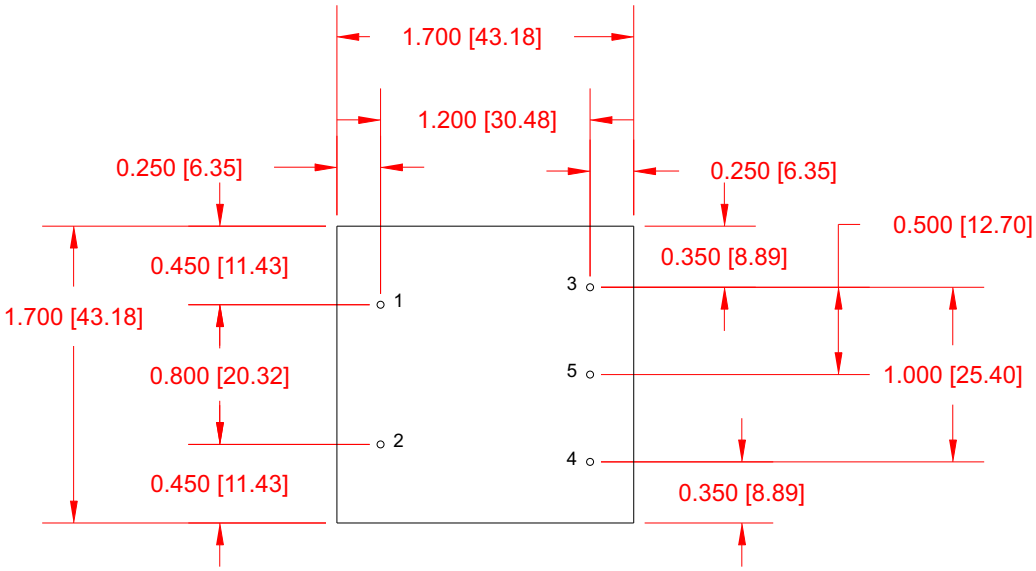

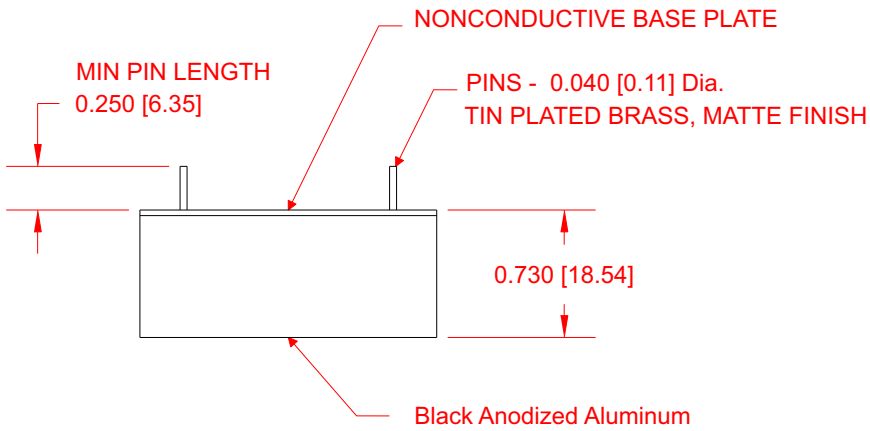

PIN #	STANDARD		ALTERNATE (/A)	
	Single	Dual	Single	Dual
1	+ Input	+ Input	+ Input	+ Input
2	- Input	- Input	- Input	- Input
3	- Output	- Output	+Output	+ Output
4	+ Output	+ Output	- Output	- Output
5	No Pin	Com	No Pin	Com

J5 SERIES 5 WATT PROPORTIONAL HV DC/DC CONVERTERS

APPLICATION NOTES

INPUT AND OUTPUT IMPEDANCE

The J5 Series of power converters have been designed to be stable with no external capacitors when used in low inductance input and output circuits. However, in some applications, the inductance associated with the distribution from the power source to the input of the converter can affect the stability of the converter. The addition of a 100 µF electrolytic capacitor with an ESR <1 Ohm across the input helps ensure stability of the converter. In some applications, the user may need to use decoupling capacitance at the load.

SHORT CIRCUIT PROTECTION

The J5 Series is equipped with short circuit protection. The converter will fold-back the input power whenever a short circuit is applied to its output and automatically recover after the overload condition is removed.

ISOLATION

The output of the J5 Series is galvanically isolated from the input, capacitance is < 30pF and resistance is > 10G Ohm. For dual output units Isolation is from Com output pin (5) and -Input (2).

RIPPLE AND NOISE

Figure below shows a typical output voltage ripple waveform, measured at full rated load current with no additional output filtering. External low ESR capacitors may be added across output to further reduce ripple.

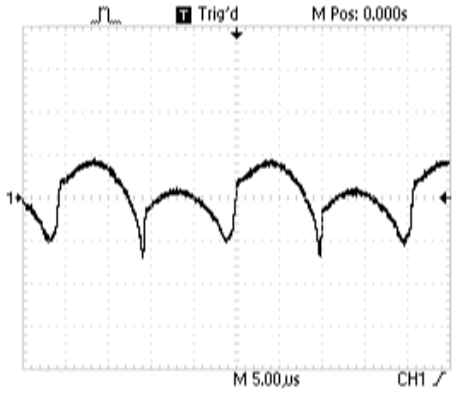

STARTUP TRANSIENT

Figure below shows a typical output voltage during turn-on, measured at no load current with no additional output filtering.

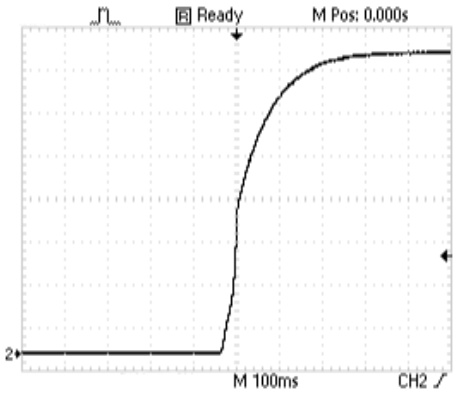

Figure below shows a typical output voltage during turn-on, measured at full rated load current with no additional output filtering.

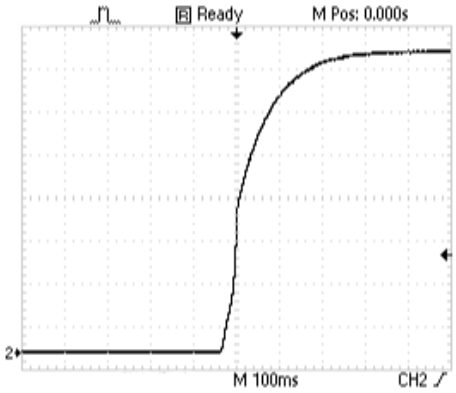

J5 SERIES 5 WATT PROPORTIONAL HV DC/DC CONVERTERS

APPLICATION NOTES

INRUSH CURRENT

The inrush current of the J5 Series has been kept as low as possible. However, a series resistor may be inserted in the input line to limit this current further.

LOAD TRANSIENT

Figure below shows a typical output voltage response, measured during a transition from full rated load current to no load current with no additional output filtering.

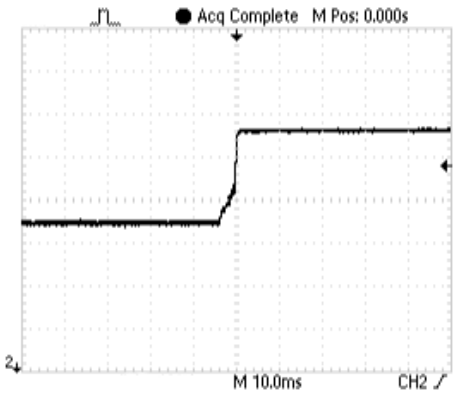

Figure below shows a typical output voltage response, measured during a transition from no load current to full rated load current with no additional output filtering.

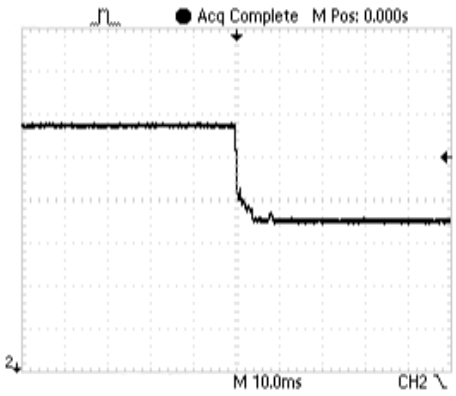

CONNECTION IN PARALLEL

The figures below shows how to connect outputs of several units with equal nominal output voltage in parallel with the use of oring diodes.

POSITIVE OUTPUT

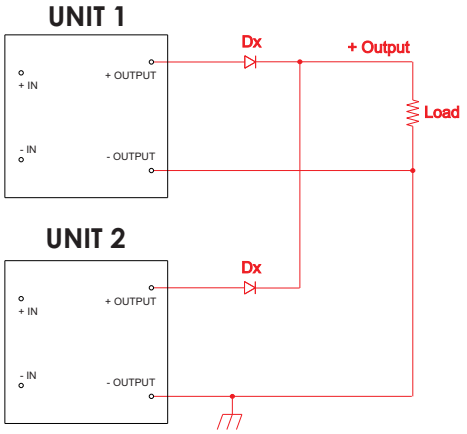

NEGATIVE OUTPUT

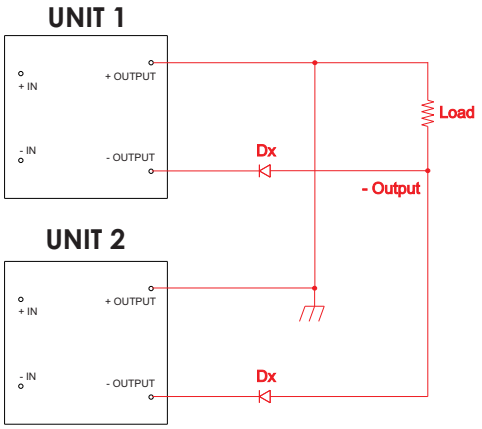

NOTE:
The ratings of Dx should be 1.5 times the maximum current and voltage expected in each branch.

J5 SERIES 5 WATT PROPORTIONAL HV DC/DC CONVERTERS

CONNECTION IN SERIES

Figures below shows how to connect multiple outputs in series with the use of shunt diodes, taking into consideration that the highest achieved output voltage should remain below the rated isolation voltage.

POSITIVE OUTPUT

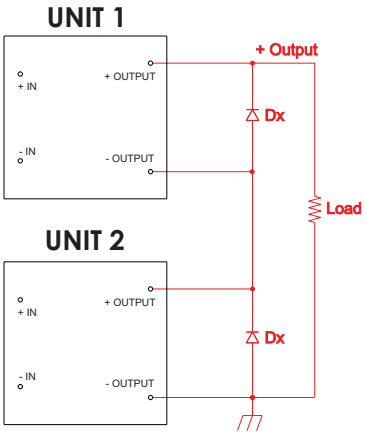

NEGATIVE OUTPUT

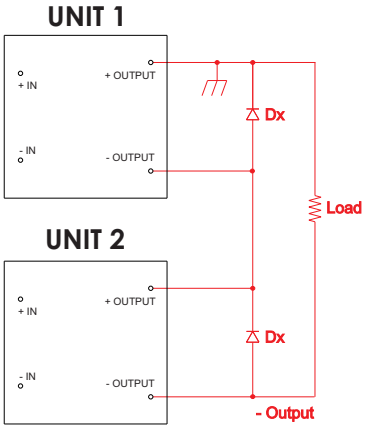

DUAL OUTPUT

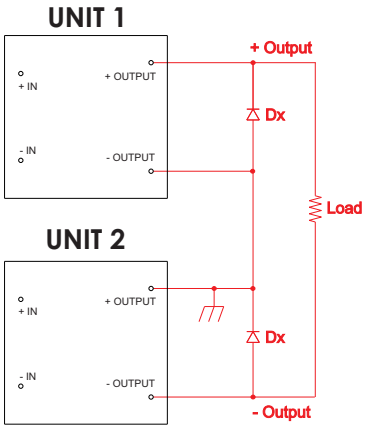

NOTE:
The ratings of Dx should be 1.5 times the maximum current and voltage expected in each branch.

J5 SERIES 5 WATT PROPORTIONAL HV DC/DC CONVERTERS

APPLICATION NOTES

POSITIVE OR NEGATIVE OUTPUTS

Isolated DC-DC voltage converters can provide positive or negative voltages from a single device.

Isolated DC-DC converters may also be used with either a positive or a negative input voltage source, as long as the relative polarity of the input to the device is maintained.

The figures below show the various polarity combinations and how to connect the converter to provide them relative to ground.

POSITIVE SOURCE WITH A POSITIVE OUTPUT

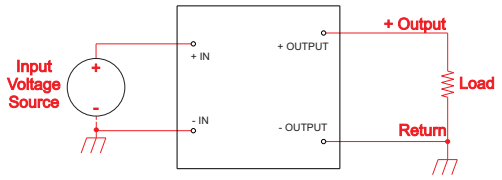

POSITIVE SOURCE WITH A NEGATIVE OUTPUT

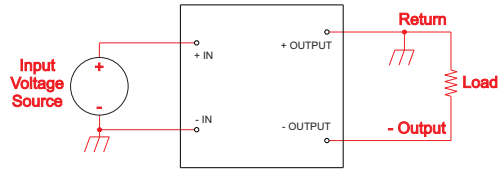

NEGATIVE SOURCE WITH A POSITIVE OUTPUT

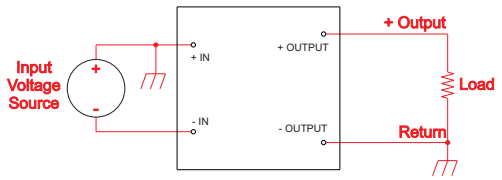

NEGATIVE SOURCE WITH A NEGATIVE OUTPUT

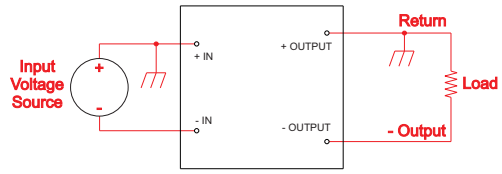

CONNECTIONS FOR DUAL OUTPUTS

Isolation on a dual output converter is from Com output pin (5) and -Input (2) and therefore ground connection on the output is to Com pin only.

The figures below shows how to power a dual output converter with either a positive or a negative input voltage source.

POSITIVE VOLTAGE SOURCE

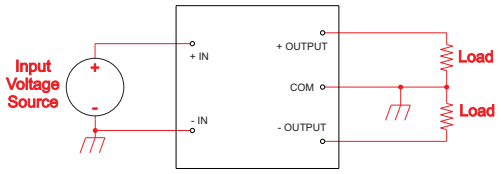

NEGATIVE VOLTAGE SOURCE

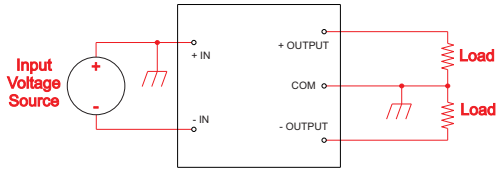

NOTE:
The (- In) must be kept negative with respect to the (+In) pin. If this polarity is reversed, permanent damage to the converter may occur.

J5 SERIES 5 WATT PROPORTIONAL HV DC/DC CONVERTERS

APPLICATION NOTES

CLEANING AGENTS

In order to avoid possible damage, any penetration of cleaning fluids must be prevented, since the power supplies are not hermetically sealed.

NUCLEAR AND MEDICAL APPLICATIONS

American Power Design products are not designed, intended for use in, or authorized for use as critical components in life support systems, equipment used in hazardous environments, or nuclear control systems without the express written consent of American Power Design, Inc.

TECHNICAL REVISIONS

The appearance of products, including safety agency certifications pictured on labels, may change depending on the date manufactured. Specifications are subject to change without notice.

SAFETY REQUIREMENTS

The converters are designed to meet North American and International safety regulatory requirements per UL 60950-1/CSA 22.2 No. 60950-1-07 Second Edition, IEC 60950-1: 2005, and EN 60950-1:2006. Basic Insulation is provided between input and output. To comply with safety agencies requirements, an input line fuse must be used external to the converter. The table below provides the recommended fuse rating for use with this family of products.

Input Voltage Range	Fuse Rating
0-12Vdc	1A

If one input fuse is used for a group of modules, the maximum fuse rating should not exceed 10A.

WARRANTY

All products manufactured by American Power Design, Inc. (APD) are warranted to be free of defects due to material or workmanship for a period of one year from date of shipment. At our option, APD will repair or replace any non-conforming product.
APD expressly disclaims any liability for consequential or incidental damages resulting from the use or misuse of its products by the purchaser or others.
This warranty is in lieu of all warranties expressed or implied, including the warranties of merchantability. No other warranties, obligations, or liabilities are expressed or implied.
All products being returned for repair require a return material authorization(RMA) assigned by APD prior to return shipment.

American Power Design, Inc.

"The best high voltage design solution"

RoHS

J10 SERIES 10 WATT HIGH VOLTAGE DC/DC CONVERTERS

FEATURES

- Customer Selects Output Voltage
- Single Outputs to + or - 6000 Vdc
- Dual Outputs to +/- 3000 Vdc
- High Reliability
- Industry Standard Pinouts
- Wide Temperature Range (-20 to +85°C)
- 60 kHz Switching Frequency
- 6500 Vdc Output Isolation
- Continuous Short Circuit Protection

The J10 Series of miniature DC/DC converters offers a 6500 Vdc isolated 10 Watt high voltage output directly proportional to input voltage. They are available in alternate industry standard pinouts. All models will tolerate a short circuit indefinitely. They also include a LC input filter to minimize reflected ripple current.

ELECTRICAL SPECIFICATIONS

Voltage Accuracy	+/-5%
Line Regulation	Proportional
Load Regulation	+/- 10%
Output Ripple	0.05% P-P
Startup Voltage	< 0.7Vdc
Input Filter	LC Input Filter
Efficiency	> 75%
Short Circuit Protection	Continuous
Switching Frequency	60 kHz
Output Isolation	6500 Vdc
Input / Output Capacitance	< 30pF

GENERAL SPECIFICATIONS

Temp. Stability	+/-0.05%/°C
Temp. (Operating , Case)	-20 to +85°C
Temp. (Storage)	-55 to +100°C
Humidity	0 to 95% (Non-Condensing)
EMI/RFI	Shielded Version Available *(Suffix /S)*
Derating	None
Cooling	Free-Air Convection

PHYSICAL SPECIFICATIONS

Dimensions	1.5 x 2.4 x 0.81 inches
Weight	3.4 Oz
Case Material	Black Phenolic

Tel (888) 894-4446 WWW.APOWERDESIGN.COM Fax (603) 898-6534

J10 SERIES 10 WATT HIGH VOLTAGE DC/DC CONVERTERS

SINGLE OUTPUTS

REPRESENTATIVE MODEL LISTING							
MODEL NUMBER		INPUT SPECIFICATIONS			OUTPUT SPECIFICATIONS		
Non-RoHs	RoHs	VOLTAGE	NO LOAD	FULL LOAD	VOLTAGE	RIPPLE	CURRENT
J10-20	J10-20/Y	0V - 12Vdc	<250 mA	<1.0 A	0V- 200Vdc	<0.5% (1V p-p)	50 mA
J10-30	J10-30/Y	0V - 12Vdc	<250 mA	<1.0 A	0V - 300Vdc	<0.5% (1.5V p-p)	33.3 mA
J10-40	J10-40/Y	0V - 12Vdc	<250 mA	<1.0 A	0V - 400Vdc	<0.5% (2V p-p)	25 mA
J10-50	J10-50/Y	0V - 12Vdc	<250 mA	<1.0 A	0V - 500Vdc	<0.05% (0.25V p-p)	20 mA
J10-60	J10-60/Y	0V - 12Vdc	<250 mA	<1.0 A	0V- 600Vdc	<0.05% (0.3V p-p)	16 mA
J10-80	J10-80/Y	0V - 12Vdc	<250 mA	<1.0 A	0V- 800Vdc	<0.05% (0.4V p-p)	12.5 mA
J10-100	J10-100/Y	0V - 12Vdc	<250 mA	<1.0 A	0V- 1kVdc	<0.05% (0.5V p-p)	10 mA
J10-120	J10-120/Y	0V - 12Vdc	<250 mA	<1.0 A	0V- 1.2kVdc	<0.05% (0.6V p-p)	8.3 mA
J10-150	J10-150/Y	0V - 12Vdc	<250 mA	<1.0 A	0V - 1.5kVdc	<0.05% (0.75V p-p)	6.6 mA
J10-200	J10-200/Y	0V - 12Vdc	<250 mA	<1.0 A	0V- 2kVdc	<0.25% (5V p-p)	5 mA
J10-300	J10-300/Y	0V - 15Vdc	<230 mA	<920 mA	0V - 3kVdc	<0.25% (7.5V p-p)	3.3 mA
J10-400	J10-400/Y	0V - 15Vdc	<230 mA	<920 mA	0V - 4kVdc	<0.25% (10V p-p)	2.5 mA
J10-500	J10-500/Y	0V - 15Vdc	<230 mA	<920 mA	0V - 5kVdc	<0.25% (12.5V p-p)	2 mA
J10-600	J10-600/Y	0V - 15Vdc	<230 mA	<920 mA	0V- 6kVdc	<0.25% (15V p-p)	1.66 mA

J10 SERIES 10 WATT HIGH VOLTAGE DC/DC CONVERTERS

DUAL OUTPUTS

REPRESENTATIVE MODEL LISTING							
MODEL NUMBER		INPUT SPECIFICATIONS			OUTPUT SPECIFICATIONS		
Non-RoHs	RoHs	VOLTAGE	NO LOAD	FULL LOAD	VOLTAGE	RIPPLE *Note	CURRENT
J10-D10	J10-D10/Y	0V - 12Vdc	<250 mA	<1.0 A	0V- +/-100Vdc	<1% (1V p-p)	50 mA
J10-D15	J10-D15/Y	0V - 12Vdc	<250 mA	<1.0 A	0V - +/-150Vdc	<1% (1.5V p-p)	33.3 mA
J10-D20	J10-D20/Y	0V - 12Vdc	<250 mA	<1.0 A	0V - +/-200Vdc	<1% (2V p-p)	25 mA
J10-D25	J10-D25/Y	0V - 12Vdc	<250 mA	<1.0 A	0V - +/-250Vdc	<0.1% (0.25V p-p)	20 mA
J10-D30	J10-D30/Y	0V - 12Vdc	<250 mA	<1.0 A	0V- +/-300Vdc	<0.1% (0.3V p-p)	16 mA
J10-D40	J10-D40/Y	0V - 12Vdc	<250 mA	<1.0 A	0V- +/-400Vdc	<0.1% (0.4V p-p)	12.5 mA
J10-D50	J10-D50/Y	0V - 12Vdc	<250 mA	<1.0 A	0V- +/-500Vdc	<0.1% (0.5V p-p)	10 mA
J10-D60	J10-D60/Y	0V - 12Vdc	<250 mA	<1.0 A	0V- +/-600Vdc	<0.1% (0.6V p-p)	8.3 mA
J10-D75	J10-D75/Y	0V - 12Vdc	<250 mA	<1.0 A	0V - +/-750Vdc	<0.1% (0.75V p-p)	6.6 mA
J10-D100	J10-D100/Y	0V - 12Vdc	<250 mA	<1.0 A	0V- +/-1kVdc	<0.5% (5V p-p)	5 mA
J10-D150	J10-D150/Y	0V - 15Vdc	<230 mA	<920 mA	0V - +/-1.5kVdc	<0.5% (7.5V p-p)	3.3 mA
J10-D200	J10-D200/Y	0V - 15Vdc	<230 mA	<920 mA	0V - +/-2kVdc	<0.5% (10V p-p)	2.5 mA
J10-D250	J10-D250/Y	0V - 15Vdc	<230 mA	<920 mA	0V - +/-2.5kVdc	<0.5% (12.5V p-p)	2 mA
J10-D300	J10-D300/Y	0V - 15Vdc	<230 mA	<920 mA	0V- +/-3kVdc	<0.5% (15V p-p)	1.66 mA

J10-D300/A/S/Y

- Product Family
- Total Output Power
- Dual Output Option
- /Y RoHS Compliance
- /S Shield Option
- /A Alternate Pinout A

Customer Selects Output Voltage*

The J10 Series are designed such that the customer may order any output voltage from 100Vdc to 6kVdc (Single Outputs) or +/- 50Vdc to +/- 3000Vdc (Dual Outputs) at no additional charge.

ACTUAL OUTPUT VOLTAGE IS 10X

NOTE:
Ripple on dual output units are measured between the positive and negative output pins.

J10 SERIES 10 WATT HIGH VOLTAGE DC/DC CONVERTERS

STANDARD & ALTERNATE (/A)

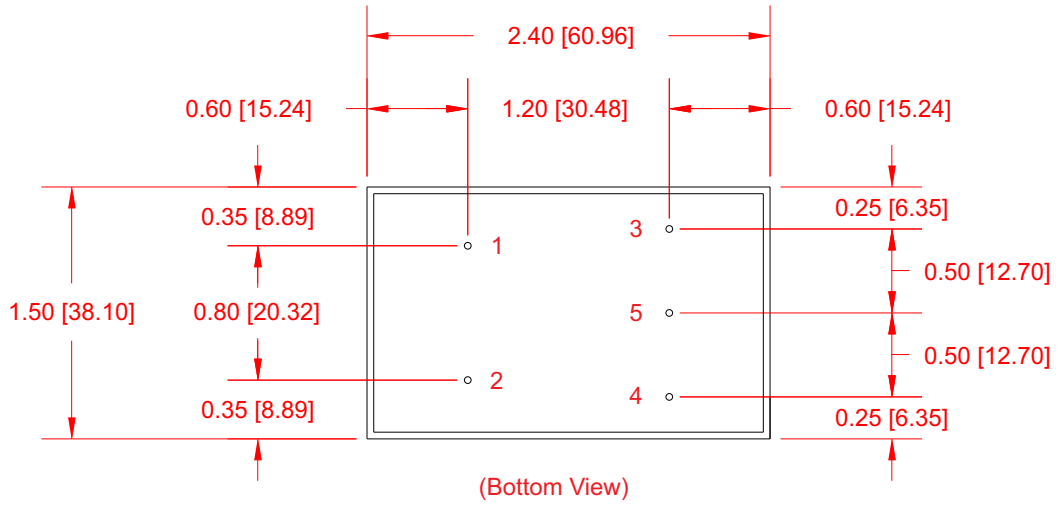

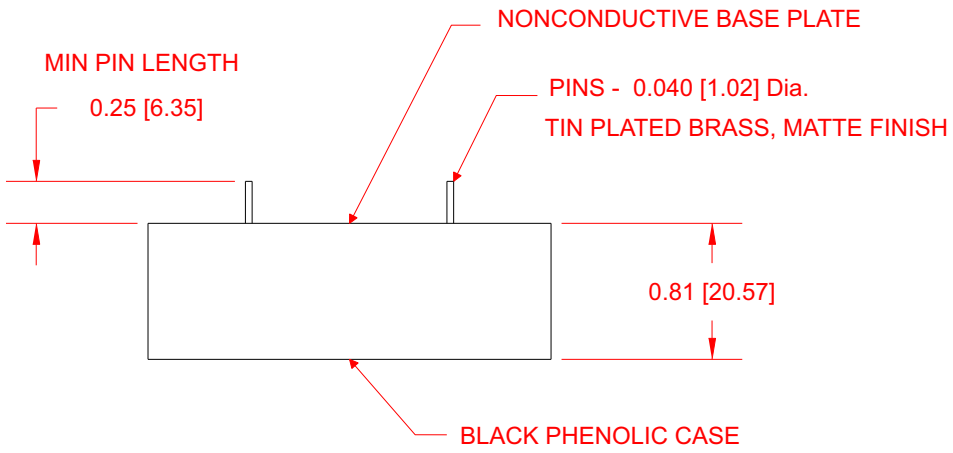

PIN #	STANDARD		ALTERNATE (/A)	
	Single	Dual	Single	Dual
1	+ Input	+ Input	+ Input	+ Input
2	- Input	- Input	- Input	- Input
3	- Output	- Output	+Output	+ Output
4	+ Output	+ Output	- Output	- Output
5	No Pin	Com	No Pin	Com

Dimensions are in Inches
[Metric equivalents in brackets]

J10 SERIES 10 WATT HIGH VOLTAGE DC/DC CONVERTERS

SHIELD OPTION (/S)

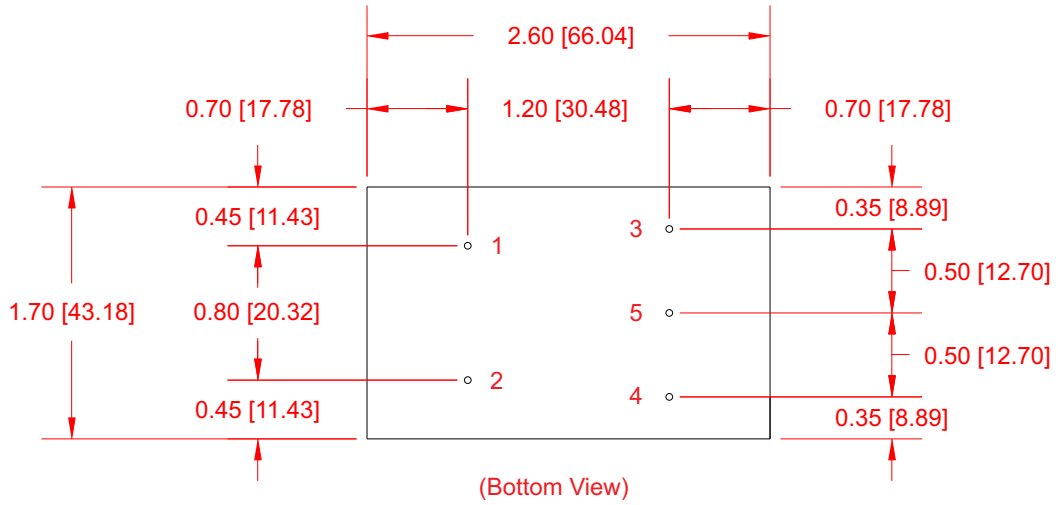

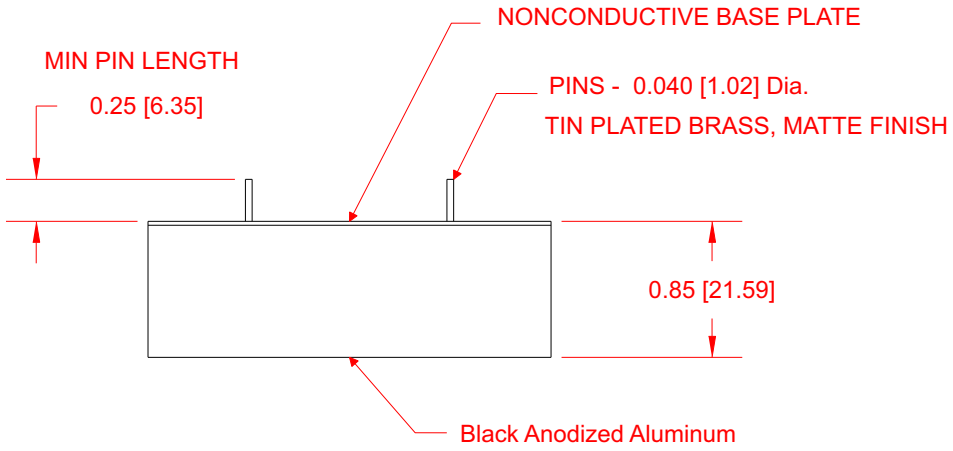

PIN #	STANDARD		ALTERNATE (/A)	
	Single	Dual	Single	Dual
1	+ Input	+ Input	+ Input	+ Input
2	- Input	- Input	- Input	- Input
3	- Output	- Output	+Output	+ Output
4	+ Output	+ Output	- Output	- Output
5	No Pin	Com	No Pin	Com

Dimensions are in Inches
[Metric equivalents in brackets]

J10 SERIES 10 WATT HIGH VOLTAGE DC/DC CONVERTERS

APPLICATION NOTES

INPUT AND OUTPUT IMPEDANCE

The J10 Series of power converters have been designed to be stable with no external capacitors when used in low inductance input and output circuits. However, in some applications, the inductance associated with the distribution from the power source to the input of the converter can affect the stability of the converter. The addition of a 100 µF electrolytic capacitor with an ESR <1 Ohm across the input helps ensure stability of the converter. In many applications, the user has to use decoupling capacitance at the load.

SHORT CIRCUIT PROTECTION

The J10 Series is equipped with short circuit protection. The converter will fold-back the input power whenever a short circuit is applied to its output and automatically recover after the overload condition is removed.

ISOLATION

The output of the J10 Series is galvanically isolated from the input, capacitance is < 30pF and resistance is > 10G Ohm. For dual output units Isolation is from Com output pin (5) and -Input (2).

RIPPLE AND NOISE

Figure below shows a typical output voltage ripple waveform, measured at full rated load current with no additional output filtering. External low ESR capacitors may be added across output to further reduce ripple.

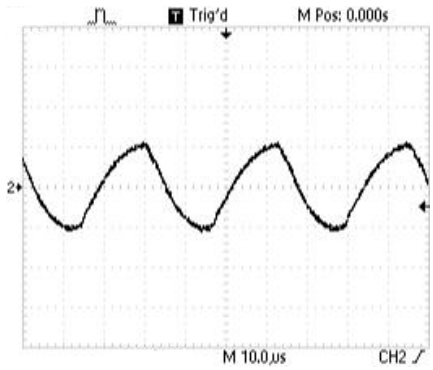

NOTE:
Ripple on dual output units are measured between the positive and negative output pins.

STARTUP TRANSIENT

Figure below shows a typical output voltage during turn-on, measured at no load current with no additional output filtering.

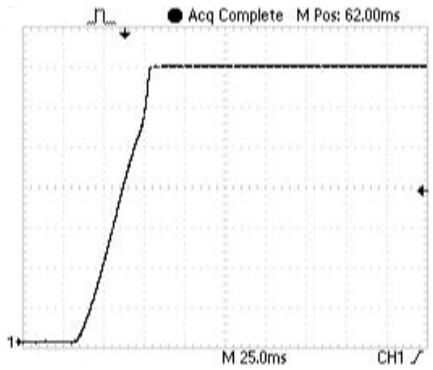

Figure below shows a typical output voltage during turn-on, measured at full rated load current with no additional output filtering.

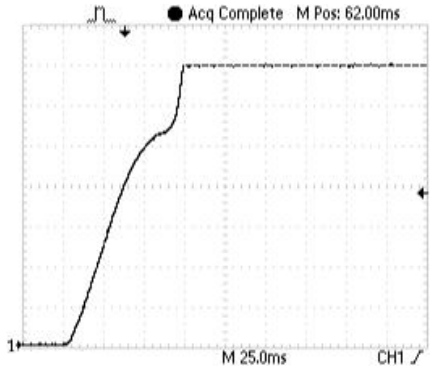

J10 SERIES 10 WATT HIGH VOLTAGE DC/DC CONVERTERS

APPLICATION NOTES

INRUSH CURRENT

The inrush current of the J10 Series has been kept as low as possible. However, a series resistor may be inserted in the input line to limit this current further.

LOAD TRANSIENT

Figure below shows a typical output voltage response, measured during a transition from full rated load current to no load current with no additional output filtering.

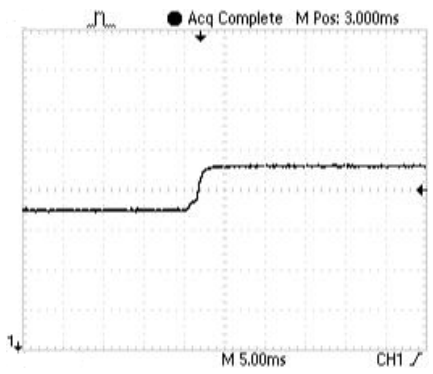

Figure below shows a typical output voltage response, measured during a transition from no load current to full rated load current with no additional output filtering.

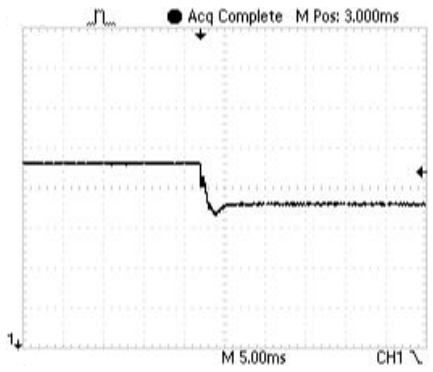

CONNECTION IN PARALLEL

The figures below shows how to connect outputs of several units with equal nominal output voltage in parallel with the use of oring diodes.

POSITIVE OUTPUT

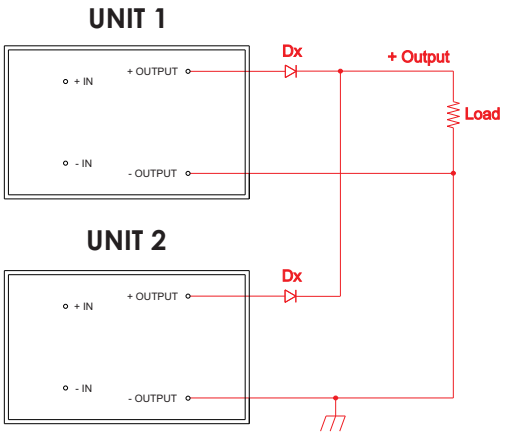

NEGATIVE OUTPUT

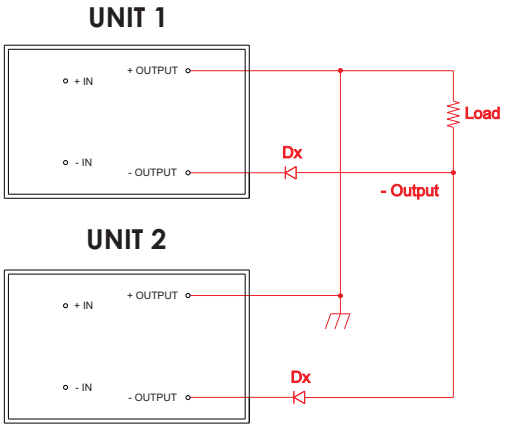

NOTE:
The ratings of Dx should be 1.5 times the maximum current and voltage expected in each branch.

J10 SERIES 10 WATT HIGH VOLTAGE DC/DC CONVERTERS

CONNECTION IN SERIES

Figures below shows how to connect multiple outputs in series with the use of shunt diodes, taking into consideration that the highest achieved output voltage should remain below the rated isolation voltage.

POSITIVE OUTPUT

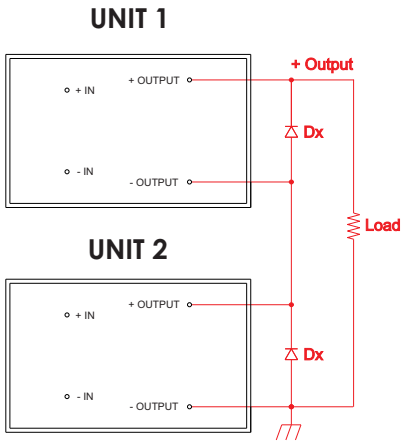

NEGATIVE OUTPUT

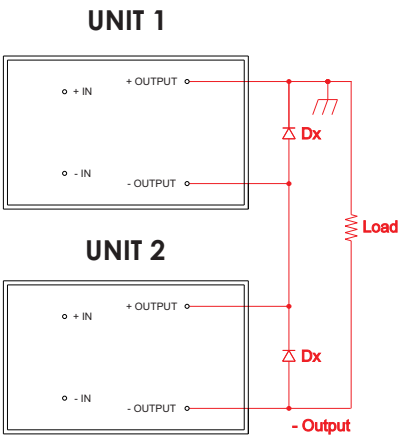

DUAL OUTPUT

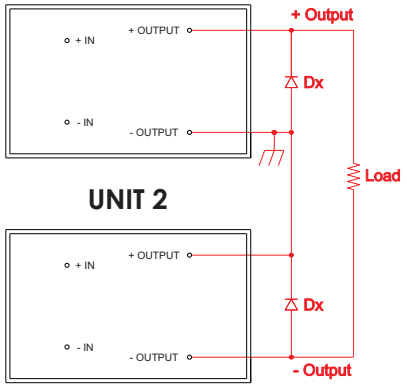

NOTE:
The ratings of Dx should be 1.5 times the maximum current and voltage expected in each branch.

J10 SERIES 10 WATT HIGH VOLTAGE DC/DC CONVERTERS

APPLICATION NOTES

POSITIVE OR NEGATIVE OUTPUTS

Isolated DC-DC voltage converters can provide positive or negative voltages from a single device.

Isolated DC-DC converters may also be used with either a positive or a negative input voltage source, as long as the relative polarity of the input to the device is maintained.

The figures below show the various polarity combinations and how to connect the converter to provide them relative to ground.

POSITIVE SOURCE WITH A POSITIVE OUTPUT

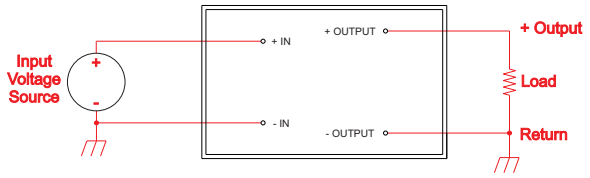

POSITIVE SOURCE WITH A NEGATIVE OUTPUT

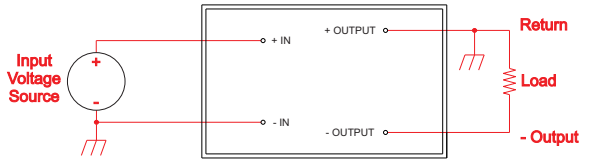

NEGATIVE SOURCE WITH A POSITIVE OUTPUT

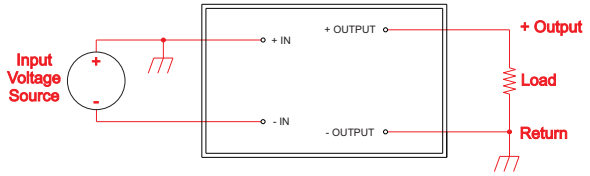

NEGATIVE SOURCE WITH A NEGATIVE OUTPUT

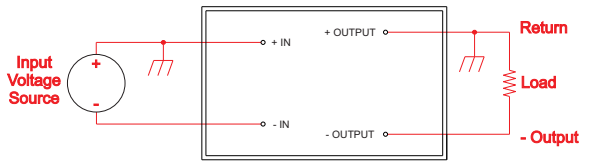

CONNECTIONS FOR DUAL OUTPUTS

Isolation on a dual output converter is from Com output pin (5) and -Input (2) and therefore ground connection on the output is to Com pin only.

The figures below shows how to power a dual output converter with either a positive or a negative input voltage source.

POSITIVE VOLTAGE SOURCE

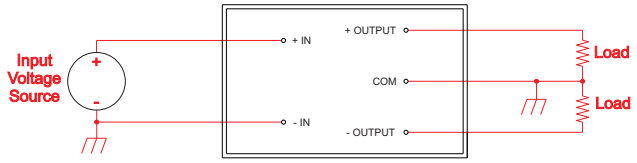

NEGATIVE VOLTAGE SOURCE

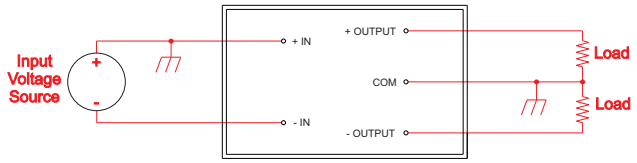

NOTE:
The (- In) must be kept negative with respect to the (+In) pin. If this polarity is reversed, permanent damage to the converter may occur.

J10 SERIES 10 WATT HIGH VOLTAGE DC/DC CONVERTERS

APPLICATION NOTES

CLEANING AGENTS

In order to avoid possible damage, any penetration of cleaning fluids must be prevented, since the power supplies are not hermetically sealed.

NUCLEAR AND MEDICAL APPLICATIONS

American Power Design products are not designed, intended for use in, or authorized for use as critical components in life support systems, equipment used in hazardous environments, or nuclear control systems without the express written consent of American Power Design, Inc.

TECHNICAL REVISIONS

The appearance of products, including safety agency certifications pictured on labels, may change depending on the date manufactured. Specifications are subject to change without notice.

SAFETY REQUIREMENTS

The converters are designed to meet North American and International safety regulatory requirements per UL 60950-1/CSA 22.2 No. 60950-1-07 Second Edition, IEC 60950-1: 2005, and EN 60950-1:2006. Basic Insulation is provided between input and output. To comply with safety agencies requirements, an input line fuse must be used external to the converter. The table below provides the recommended fuse rating for use with this family of products.

Input Voltage Range	Fuse Rating
0-12Vdc	2A
0-15Vdc	2A

If one input fuse is used for a group of modules, the maximum fuse rating should not exceed 10A.

WARRANTY

All products manufactured by American Power Design, Inc. (APD) are warranted to be free of defects due to material or workmanship for a period of one year from date of shipment. At our option, APD will repair or replace any non-conforming product.
APD expressly disclaims any liability for consequential or incidental damages resulting from the use or misuse of its products by the purchaser or others.
This warranty is in lieu of all warranties expressed or implied, including the warranties of merchantability. No other warranties, obligations, or liabilities are expressed or implied.
All products being returned for repair require a return material authorization(RMA) assigned by APD prior to return shipment.

American Power Design, Inc.

"The best high voltage design solution"

RoHS

L1 SERIES 1 WATT HIGH VOLTAGE DC/DC CONVERTERS

FEATURES

- Customer Selects Output Voltage
- Outputs to 500 Vdc
- Low Profile
- Excellent Line & Load Regulation
- Low Output Ripple
- 1000 Vdc Output Isolation
- Continuous Short Circuit Protection
- Economical

The L1 Series Low Profile DC/DC converter offers a 1000 Vdc isolated high voltage output in a six-sided metal case. Their small size, low output ripple, and excellent regulation characteristics make them ideally suited for applications that demand a high degree of performance All models will tolerate a short circuit indefinitely.

ELECTRICAL SPECIFICATIONS

Voltage Accuracy	+/-1%
Line Regulation	+/- 0.1%
Load Regulation	+/- 0.2%
Output Ripple	< 0.05% P-P
Input Filter	Low ESR Capacitor
Efficiency	50% (typ.)
Short Circuit Protection	Continuous
Switching Frequency	60 kHz
Output Isolation	1000 Vdc
Input / Output Capacitance	< 80pF

GENERAL SPECIFICATIONS

Temp. Stability	+/-0.3%/°C
Temp. (Operating , Case)	0 to +70°C
Temp. (Storage)	-40 to +100°C
EMI/RFI	Six Sided Shield
Derating	None
Cooling	Free-Air Convection

PHYSICAL SPECIFICATIONS

Dimensions	1 x 2 x 0.41 inches
Weight	1.2 Oz
Case Material	Nickel Plated Metal *(With Non-Conductive Base Plate)*

Tel (888) 894-4446 WWW.APOWERDESIGN.COM Fax (603) 898-6534

L1 SERIES 1 WATT HIGH VOLTAGE DC/DC CONVERTERS

REPRESENTATIVE MODEL LISTING

OUTPUT SPECIFICATIONS		MODEL NUMBER / INPUT RANGE							
VOLTAGE	CURRENT	4.5-5.5VDC		10-14VDC		21-27VDC		43-53VDC	
		Non-RoHs	RoHs	Non-RoHs	RoHs	Non-RoHs	RoHs	Non-RoHs	RoHs
24 Vdc	42 mA	L15-24	L15-24/Y	L112-24	L112-24/Y	L124-24	L124-24/Y	L148-24	L148-24/Y
48 Vdc	20 mA	L15-48	L15-48/Y	L112-48	L112-48/Y	L124-48	L124-48/Y	L148-48	L148-48/Y
60Vdc	17 mA	L15-60	L15-60/Y	L112-60	L112-60/Y	L124-60	L124-60/Y	L148-60	L148-60/Y
80 Vdc	13 mA	L15-80	L15-80/Y	L112-80	L112-80/Y	L124-80	L124-80/Y	L148-80	L148-80/Y
100 Vdc	10 mA	L15-100	L15-100/Y	L112-100	L112-100/Y	L124-100	L124-100/Y	L148-100	L148-100/Y
110 Vdc	9 mA	L15-110	L15-110/Y	L112-110	L112-110/Y	L124-110	L124-110/Y	L148-110	L148-110/Y
120 Vdc	8 mA	L15-120	L15-120/Y	L112-120	L112-120/Y	L124-120	L124-120/Y	L148-120	L148-120/Y
130 Vdc	7.7 mA	L15-130	L15-130/Y	L112-130	L112-130/Y	L124-130	L124-130/Y	L148-120	L148-120/Y
150 Vdc	6.7 mA	L15-150	L15-150/Y	L112-150	L112-150/Y	L124-150	L124-150/Y	L148-150	L148-150/Y
200 Vdc	5 mA	L15-200	L15-200/Y	L112-200	L112-200/Y	L124-200	L124-200/Y	L148-200	L148-200/Y
250 Vdc	4 mA	L15-250	L15-250/Y	L112-250	L112-250/Y	L124-250	L124-250/Y	L148-250	L148-250/Y
300 Vdc	3.3 mA	L15-300	L15-300/Y	L112-300	L112-300/Y	L124-300	L124-300/Y	L148-300	L148-300/Y
350 Vdc	2.8 mA	L15-350	L15-250/Y	L112-350	L112-350/Y	L124-350	L124-350/Y	L148-350	L148-350/Y
400 Vdc	2.5 mA	L15-400	L15-400/Y	L112-400	L112-400/Y	L124-400	L124-400/Y	L148-400	L148-400/Y
450 Vdc	2.2 mA	L15-450	L15-450/Y	L112-450	L112-450/Y	L124-450	L124-450/Y	L148-450	L148-450/Y
500 Vdc	2 mA	L15-500	L15-500/Y	L112-500	L112-500/Y	L124-500	L124-500/Y	L148-500	L148-500/Y

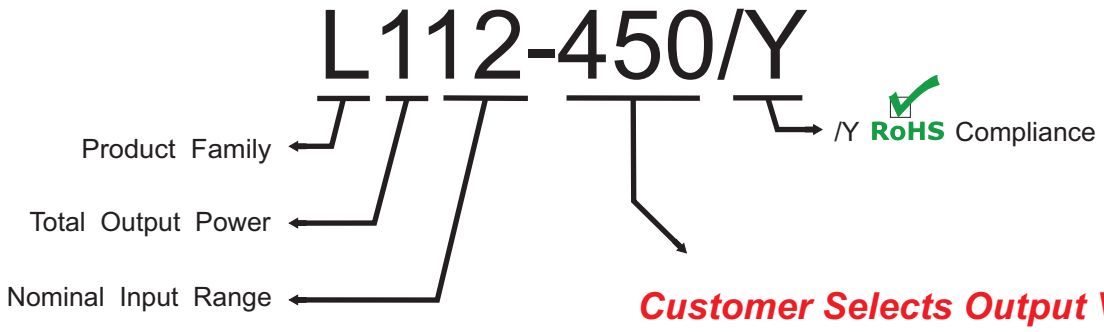

Customer Selects Output Voltage

The L1 Series are designed such that the customer may order any output voltage from 24Vdc to 500Vdc at no additional charge.

L1 SERIES 1 WATT HIGH VOLTAGE DC/DC CONVERTERS

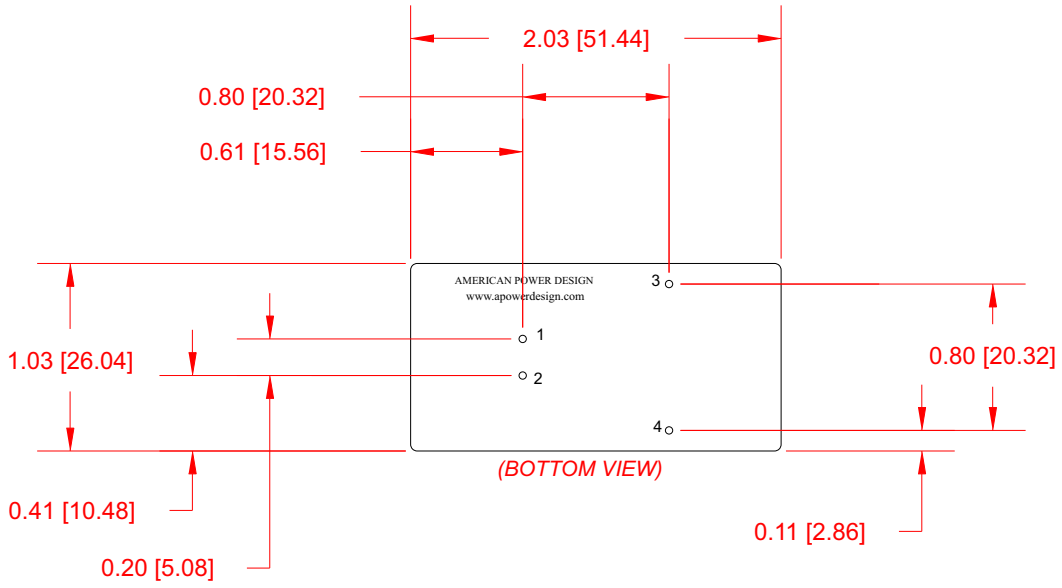

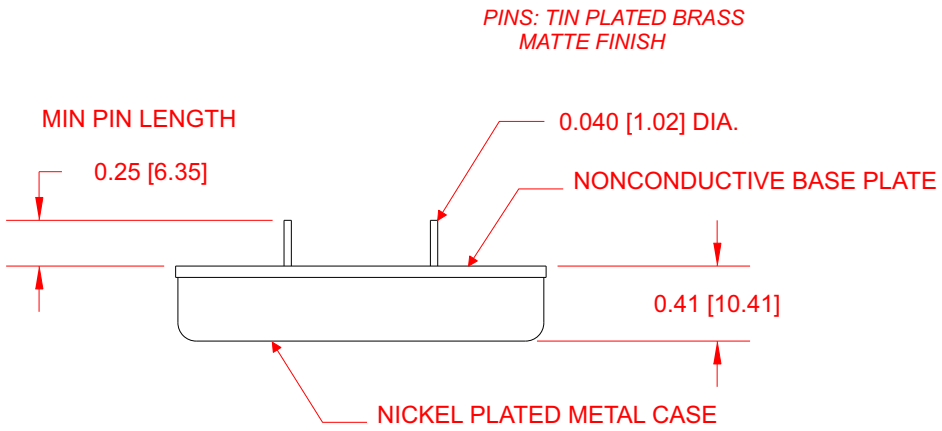

PIN #	FUNCTION
1	+ Input
2	- Input
3	+Output
4	- Output

Dimensions are in Inches
[Metric equivalents in brackets]

L1 SERIES 1 WATT HIGH VOLTAGE DC/DC CONVERTERS

APPLICATION NOTES

INPUT AND OUTPUT IMPEDANCE

The L1 Series of power converters have been designed to be stable with no external capacitors when used in low inductance input and output circuits. However, in some applications, the inductance associated with the distribution from the power source to the input of the converter can affect the stability of the converter. The addition of a 100 µF electrolytic capacitor with an ESR <1 Ohm across the input helps ensure stability of the converter. In many applications, the user has to use decoupling capacitance at the load.

SHORT CIRCUIT PROTECTION

The L1 Series is equipped with short circuit protection. The converter will fold-back the input power whenever a short circuit is applied to its output and automatically recover after the overload condition is removed.

ISOLATION

The output of the L1 Series is galvanically isolated from both the input and case, capacitance is < 80pF and resistance is > 10G Ohm.

RIPPLE AND NOISE

Figure below shows a typical output voltage ripple waveform, measured at full rated load current with no additional output filtering. External low ESR capacitors may be added across output to further reduce ripple.

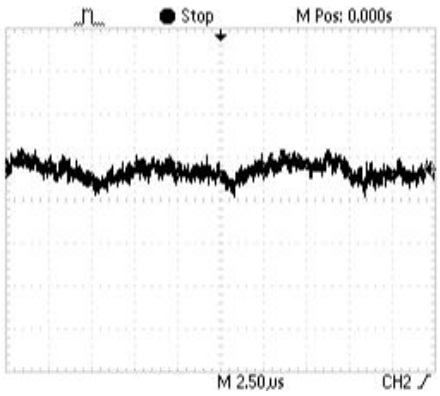

STARTUP TRANSIENT

Figure below shows a typical output voltage during turn-on, measured at no load current with no additional output filtering.

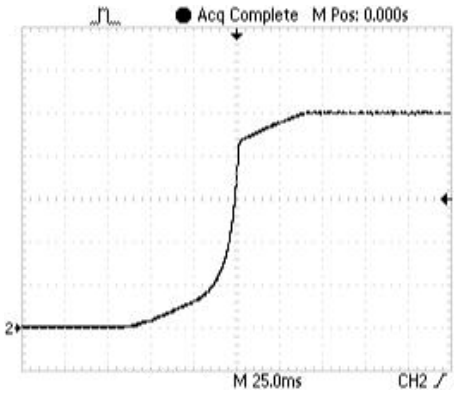

Figure below shows a typical output voltage during turn-on, measured at full rated load current with no additional output filtering.

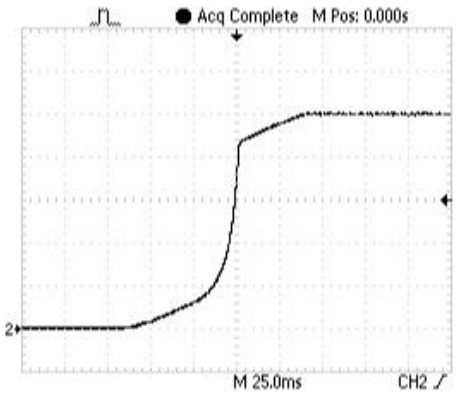

L1 SERIES 1 WATT HIGH VOLTAGE DC/DC CONVERTERS

APPLICATION NOTES

INRUSH CURRENT

The inrush current of the L1 Series has been kept as low as possible. However, a series resistor may be inserted in the input line to limit this current further.

LOAD TRANSIENT

Figure below shows a typical output voltage response, measured during a transition from full rated load current to no load current with no additional output filtering.

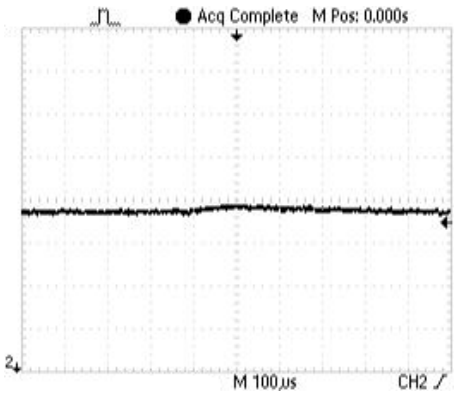

Figure below shows a typical output voltage response, measured during a transition from no load current to full rated load current with no additional output filtering.

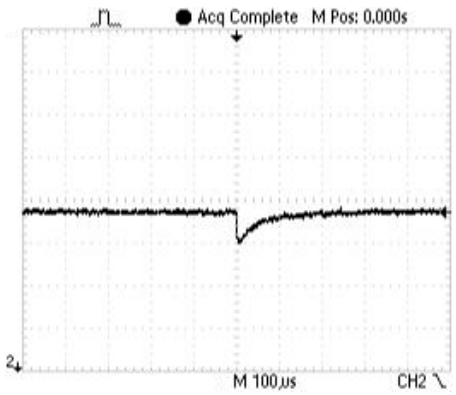

CONNECTION IN PARALLEL

The figure below shows how to connect outputs of several units with equal nominal output voltage in parallel with the use of oring diodes.

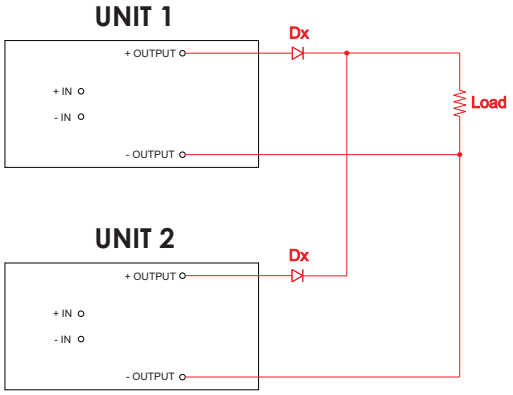

NOTE:
The ratings of Dx should be 1.5 times the maximum current and voltage expected in each branch.

CONNECTION IN SERIES

Figure below shows how to connect multiple outputs in series with the use of shunt diodes, taking into consideration that the highest achieved output voltage should remain below the rated isolation voltage.

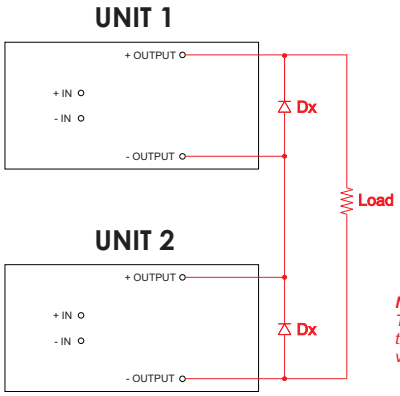

NOTE:
The ratings of Dx should be 1.5 times the maximum current and voltage expected in each branch.

L1 SERIES 1 WATT HIGH VOLTAGE DC/DC CONVERTERS

APPLICATION NOTES

CLEANING AGENTS

In order to avoid possible damage, any penetration of cleaning fluids must be prevented, since the power supplies are not hermetically sealed.

TECHNICAL REVISIONS

The appearance of products, including safety agency certifications pictured on labels, may change depending on the date manufactured. Specifications are subject to change without notice.

NUCLEAR AND MEDICAL APPLICATIONS

American Power Design products are not designed, intended for use in, or authorized for use as critical components in life support systems, equipment used in hazardous environments, or nuclear control systems without the express written consent of American Power Design, Inc.

SAFETY REQUIREMENTS

The converters are designed to meet North American and International safety regulatory requirements per UL 60950-1/CSA 22.2 No. 60950-1-07 Second Edition, IEC 60950-1: 2005, and EN 60950-1:2006. Basic Insulation is provided between input and output. To comply with safety agencies requirements, an input line fuse must be used external to the converter. The table below provides the recommended fuse rating for use with this family of products.

Input Voltage Range	Fuse Rating
4.5-5.5Vdc	1 A
10-14Vdc	0.5 A
21-27Vdc	0.2 A
43-53Vdc	0.1 A

If one input fuse is used for a group of modules, the maximum fuse rating should not exceed 10A.

WARRANTY

All products manufactured by American Power Design, Inc. (APD) are warranted to be free of defects due to material or workmanship for a period of one year from date of shipment. At our option, APD will repair or replace any non-conforming product.
APD expressly disclaims any liability for consequential or incidental damages resulting from the use or misuse of its products by the purchaser or others.
This warranty is in lieu of all warranties expressed or implied, including the warranties of merchantability. No other warranties, obligations, or liabilities are expressed or implied.
All products being returned for repair require a return material authorization(RMA) assigned by APD prior to return shipment.

American Power Design, Inc.

"The best high voltage design solution"

RoHS

L3 SERIES 3 WATT HIGH VOLTAGE DC/DC CONVERTERS

FEATURES

- Customer Selects Output Voltage
- Outputs to 500 Vdc
- Low Profile
- Excellent Line & Load Regulation
- Low Output Ripple
- 1000 Vdc Output Isolation
- Continuous Short Circuit Protection
- Economical

The L3 Series Low Profile DC/DC converter offers a 1000 Vdc isolated high voltage output in a six-sided metal case. Their small size, low output ripple, and excellent regulation characteristics make them ideally suited for applications that demand a high degree of performance All models will tolerate a short circuit indefinitely.

ELECTRICAL SPECIFICATIONS

Voltage Accuracy	+/-1%
Line Regulation	+/- 0.1%
Load Regulation	+/- 0.2%
Output Ripple	< 0.05% P-P
Input Filter	Low ESR Capacitor
Efficiency	65% (typ.)
Short Circuit Protection	Continuous
Switching Frequency	60 kHz
Output Isolation	1000 Vdc
Input / Output Capacitance	< 80pF

GENERAL SPECIFICATIONS

Temp. Stability	+/-0.3%/°C
Temp. (Operating , Case)	0 to +70°C
Temp. (Storage)	-40 to +100°C
EMI/RFI	Six Sided Shield
Derating	None
Cooling	Free-Air Convection

PHYSICAL SPECIFICATIONS

Dimensions	1 x 2 x 0.41 inches
Weight	1.2 Oz
Case Material	Nickel Plated Metal *(With Non-Conductive Base Plate)*

Tel (888) 894-4446 WWW.APOWERDESIGN.COM Fax (603) 898-6534

L3 SERIES 3 WATT HIGH VOLTAGE DC/DC CONVERTERS

REPRESENTATIVE MODEL LISTING									
OUTPUT SPECIFICATIONS		MODEL NUMBER / INPUT RANGE							
VOLTAGE	CURRENT	4.5-5.5VDC		10-14VDC		21-27VDC		43-53VDC	
		Non-RoHs	RoHs	Non-RoHs	RoHs	Non-RoHs	RoHs	Non-RoHs	RoHs
24 Vdc	125 mA	L35-24	L35-24/Y	L312-24	L312-24/Y	L324-24	L324-24/Y	L348-24	L348-24/Y
48 Vdc	62.5 mA	L35-48	L35-48/Y	L312-48	L312-48/Y	L324-48	L324-48/Y	L348-48	L348-48/Y
60Vdc	50 mA	L35-60	L35-60/Y	L312-60	L312-60/Y	L324-60	L324-60/Y	L348-60	L348-60/Y
80 Vdc	37.5 mA	L35-80	L35-80/Y	L312-80	L312-80/Y	L324-80	L324-80/Y	L348-80	L348-80/Y
100 Vdc	30 mA	L35-100	L35-100/Y	L312-100	L312-100/Y	L324-100	L324-100/Y	L348-100	L348-100/Y
110 Vdc	27 mA	L35-110	L35-110/Y	L312-110	L312-110/Y	L324-110	L324-110/Y	L348-110	L348-110/Y
120 Vdc	25 mA	L35-120	L35-120/Y	L312-120	L312-120/Y	L324-120	L324-120/Y	L348-120	L348-120/Y
130 Vdc	23 mA	L35-130	L35-130/Y	L312-130	L312-130/Y	L324-130	L324-130/Y	L348-120	L348-120/Y
150 Vdc	20 mA	L35-150	L35-150/Y	L312-150	L312-150/Y	L324-150	L324-150/Y	L348-150	L348-150/Y
200 Vdc	15 mA	L35-200	L35-200/Y	L312-200	L312-200/Y	L324-200	L324-200/Y	L348-200	L348-200/Y
250 Vdc	12 mA	L35-250	L35-250/Y	L312-250	L312-250/Y	L324-250	L324-250/Y	L348-250	L348-250/Y
300 Vdc	10 mA	L35-300	L35-300/Y	L312-300	L312-300/Y	L324-300	L324-300/Y	L348-300	L348-300/Y
350 Vdc	8.5 mA	L35-350	L35-250/Y	L312-350	L312-350/Y	L324-350	L324-350/Y	L348-350	L348-350/Y
400 Vdc	7.5 mA	L35-400	L35-400/Y	L312-400	L312-400/Y	L324-400	L324-400/Y	L348-400	L348-400/Y
450 Vdc	6.6 mA	L35-450	L35-450/Y	L312-450	L312-450/Y	L324-450	L324-450/Y	L348-450	L348-450/Y
500 Vdc	6 mA	L35-500	L35-500/Y	L312-500	L312-500/Y	L324-500	L324-500/Y	L348-500	L348-500/Y

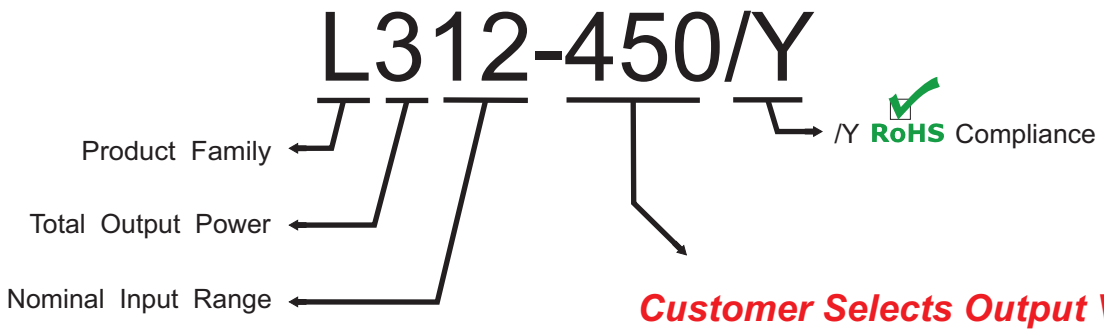

Customer Selects Output Voltage

The L3 Series are designed such that the customer may order any output voltage from 24Vdc to 500Vdc at no additional charge.

L3 SERIES 3 WATT HIGH VOLTAGE DC/DC CONVERTERS

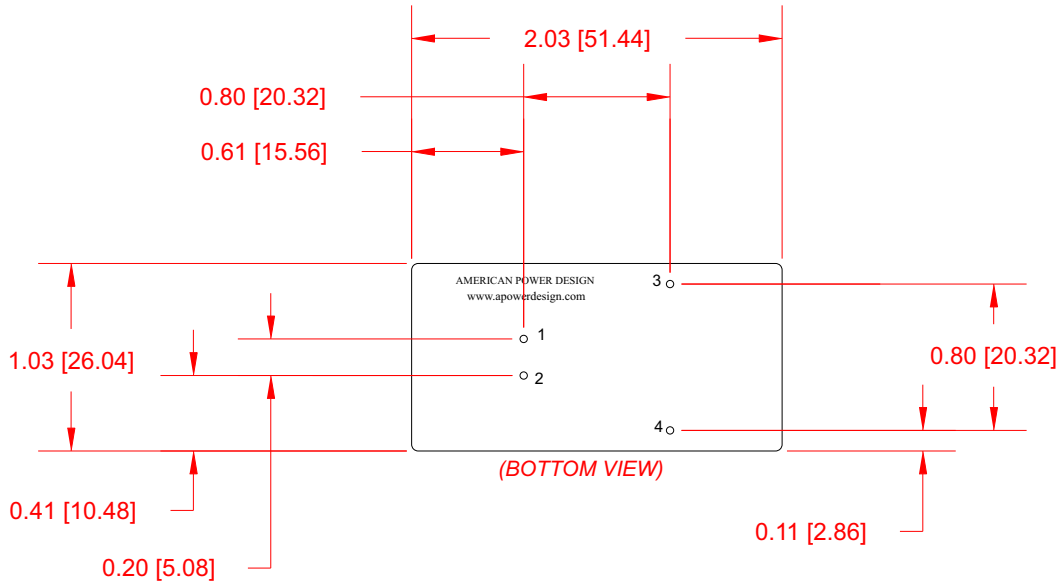

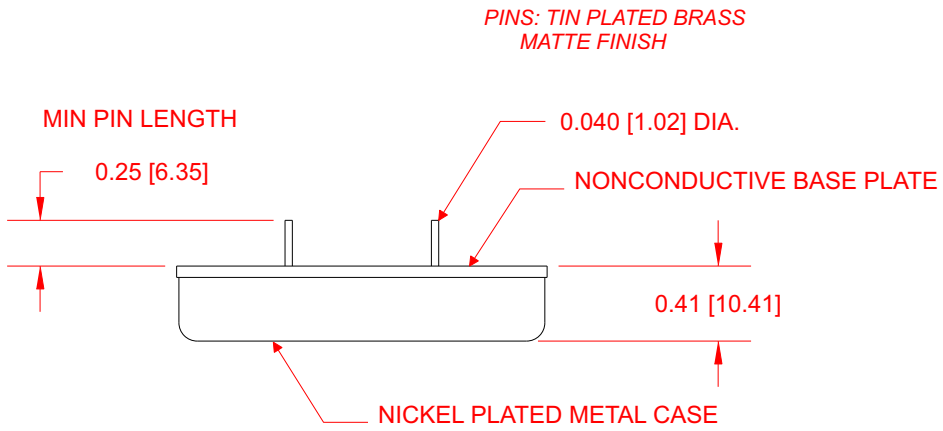

PIN #	FUNCTION
1	+ Input
2	- Input
3	+Output
4	- Output

Dimensions are in Inches
[Metric equivalents in brackets]

L3 SERIES 3 WATT HIGH VOLTAGE DC/DC CONVERTERS

APPLICATION NOTES

INPUT AND OUTPUT IMPEDANCE

The L3 Series of power converters have been designed to be stable with no external capacitors when used in low inductance input and output circuits. However, in some applications, the inductance associated with the distribution from the power source to the input of the converter can affect the stability of the converter. The addition of a 100 µF electrolytic capacitor with an ESR <1 Ohm across the input helps ensure stability of the converter. In many applications, the user has to use decoupling capacitance at the load.

SHORT CIRCUIT PROTECTION

The L3 Series is equipped with short circuit protection. The converter will fold-back the input power whenever a short circuit is applied to its output and automatically recover after the overload condition is removed.

ISOLATION

The output of the L3 Series is galvanically isolated from both the input and case, capacitance is < 80pF and resistance is > 10G Ohm.

RIPPLE AND NOISE

Figure below shows a typical output voltage ripple waveform, measured at full rated load current with no additional output filtering. External low ESR capacitors may be added across output to further reduce ripple.

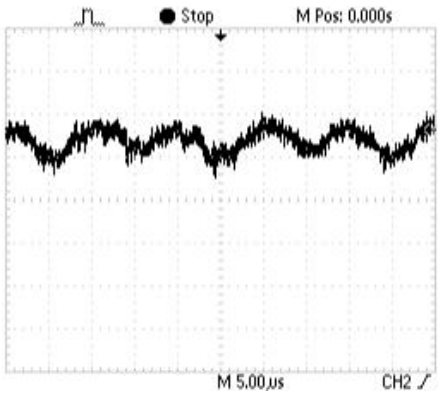

STARTUP TRANSIENT

Figure below shows a typical output voltage during turn-on, measured at no load current with no additional output filtering.

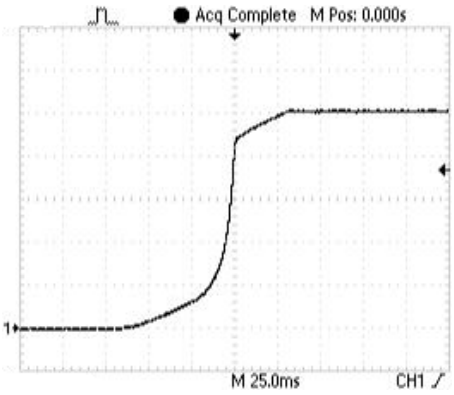

Figure below shows a typical output voltage during turn-on, measured at full rated load current with no additional output filtering.

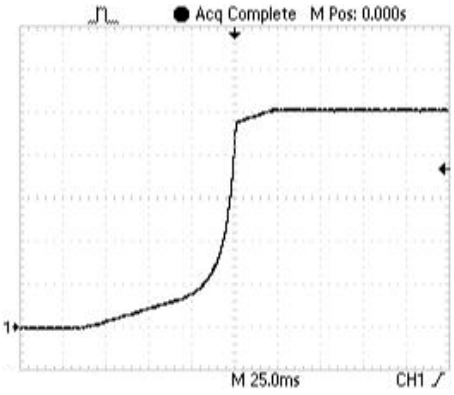

L3 SERIES 3 WATT HIGH VOLTAGE DC/DC CONVERTERS

APPLICATION NOTES

INRUSH CURRENT

The inrush current of the L3 Series has been kept as low as possible. However, a series resistor may be inserted in the input line to limit this current further.

LOAD TRANSIENT

Figure below shows a typical output voltage response, measured during a transition from full rated load current to no load current with no additional output filtering.

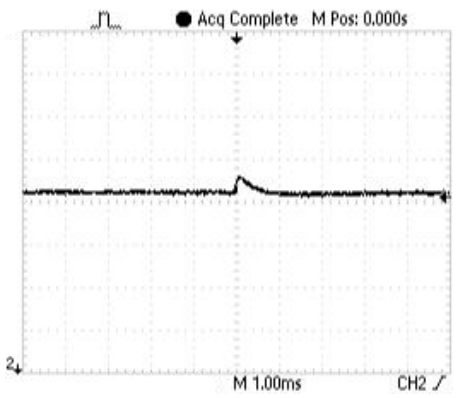

Figure below shows a typical output voltage response, measured during a transition from no load current to full rated load current with no additional output filtering.

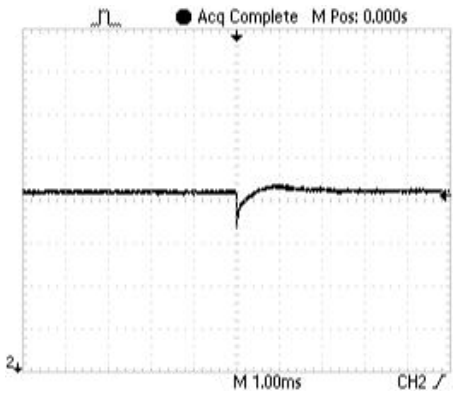

CONNECTION IN PARALLEL

The figure below shows how to connect outputs of several units with equal nominal output voltage in parallel with the use of oring diodes.

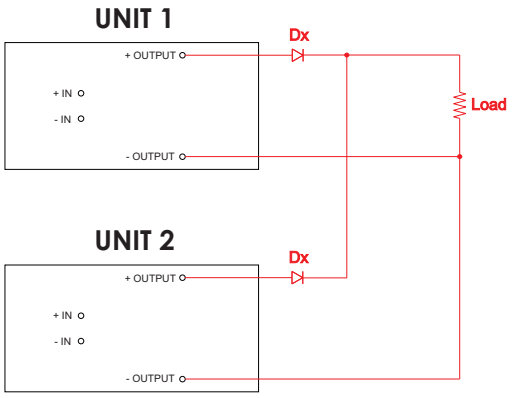

NOTE:
The ratings of Dx should be 1.5 times the maximum current and voltage expected in each branch.

CONNECTION IN SERIES

Figure below shows how to connect multiple outputs in series with the use of shunt diodes, taking into consideration that the highest achieved output voltage should remain below the rated isolation voltage.

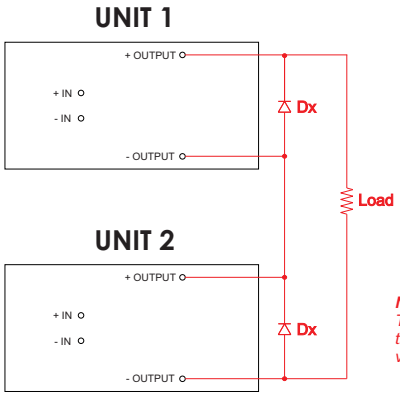

NOTE:
The ratings of Dx should be 1.5 times the maximum current and voltage expected in each branch.

L3 SERIES 3 WATT HIGH VOLTAGE DC/DC CONVERTERS

APPLICATION NOTES

CLEANING AGENTS

In order to avoid possible damage, any penetration of cleaning fluids must be prevented, since the power supplies are not hermetically sealed.

NUCLEAR AND MEDICAL APPLICATIONS

American Power Design products are not designed, intended for use in, or authorized for use as critical components in life support systems, equipment used in hazardous environments, or nuclear control systems without the express written consent of American Power Design, Inc.

TECHNICAL REVISIONS

The appearance of products, including safety agency certifications pictured on labels, may change depending on the date manufactured. Specifications are subject to change without notice.

SAFETY REQUIREMENTS

The converters are designed to meet North American and International safety regulatory requirements per UL 60950-1/CSA 22.2 No. 60950-1-07 Second Edition, IEC 60950-1: 2005, and EN 60950-1:2006. Basic Insulation is provided between input and output. To comply with safety agencies requirements, an input line fuse must be used external to the converter. The table below provides the recommended fuse rating for use with this family of products.

Input Voltage Range	Fuse Rating
4.5-5.5Vdc	1 A
10-14Vdc	0.5 A
21-27Vdc	0.2 A
43-53Vdc	0.1 A

If one input fuse is used for a group of modules, the maximum fuse rating should not exceed 10A.

WARRANTY

All products manufactured by American Power Design, Inc. (APD) are warranted to be free of defects due to material or workmanship for a period of one year from date of shipment. At our option, APD will repair or replace any non-conforming product.
APD expressly disclaims any liability for consequential or incidental damages resulting from the use or misuse of its products by the purchaser or others.
This warranty is in lieu of all warranties expressed or implied, including the warranties of merchantability. No other warranties, obligations, or liabilities are expressed or implied.
All products being returned for repair require a return material authorization(RMA) assigned by APD prior to return shipment.

American Power Design, Inc.

"The best high voltage design solution"

RoHS

M5 SERIES 5 WATT PROGRAMABLE DC/DC CONVERTERS

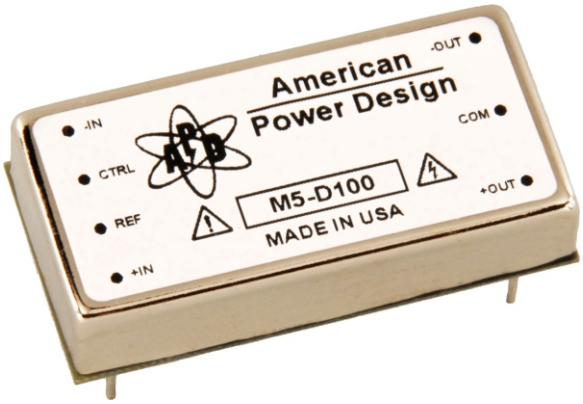

FEATURES

- Customer Selects Output Voltage
- Outputs to 1000 Vdc
- Fully Programable Outputs
- Single and Dual Outputs
- Wide Input Ranges
  (10-20Vdc , 18-36Vdc)
- 1000 Vdc Output Isolation
- Continuous Short Circuit Protection

The M5 Series high voltage DC/DC converter offers 100% programable single or dual high voltage outputs using a 0-5Vdc analog signal. Each model is enclosed in a six-sided shielded metal case and has 1000Vdc of isolation allowing one model to be utilized for both positive or negative applications. All models will tolerate a short circuit indefinitely.

ELECTRICAL SPECIFICATIONS

Voltage Accuracy	+/- 3%
Line Regulation	+/- 2%
Load Regulation	+/- 3% (20% to full Load)
Output Ripple	< 0.3 % P-P
Reference Voltage	5Vdc @ 1mA
Input Filter	Low ESR Capacitor
Efficiency	82% (typ.)
Short Circuit Protection	Continuous
Switching Frequency	130 kHz
Output Isolation	1000 Vdc
Input / Output Capacitance	< 80pF

GENERAL SPECIFICATIONS

Temp. Stability	+/- 0.02%/°C
Temp. (Operating , Case)	-25 to +70°C
Temp. (Storage)	-40 to +125°C
EMI/RFI	Six Sided Shield
Derating	None
Cooling	Free-Air Convection

PHYSICAL SPECIFICATIONS

Dimensions	1 x 2 x 0.41 inches
Weight	1.2 Oz
Case Material	Nickel Plated Metal *(With Non-Conductive Base Plate)*

Tel (888) 894-4446 WWW.APOWERDESIGN.COM Fax (603) 898-6534

M5 SERIES 5 WATT PROGRAMABLE DC/DC CONVERTERS

REPRESENTATIVE MODEL LISTING					
OUTPUT SPECIFICATIONS		MODEL NUMBER / INPUT RANGE			
		10-20VDC		18-36VDC	
VOLTAGE	CURRENT	Non-RoHs	RoHs	Non-RoHs	RoHs
0V - 24 Vdc	208 mA	M5-S24	M5-S24/Y	M5-S24/A	M5-S24/A/Y
0V - +/- 24 Vdc	104 mA	M5-D24	M5-D24/Y	M5-D24/A	M5-D24/A/Y
0V - 48 Vdc	104 mA	M5-S48	M5-S48/Y	M5-S48/A	M5-S48/A/Y
0V - +/- 48 Vdc	52 mA	M5-D48	M5-D48/Y	M5-D48/A	M5-D48/A/Y
0V - 100Vdc	50 mA	M5-S100	M5-S100/Y	M5-S100/A	M5-S100/A/Y
0V - +/- 100Vdc	25 mA	M5-D100	M5-D100/Y	M5-D100/A	M5-D100/A/Y
0V - 150 Vdc	33 mA	M5-S150	M5-S150/Y	M5-S150/A	M5-S150/A/Y
0V - +/- 150 Vdc	16 mA	M5-D150	M5-D150/Y	M5-D150/A	M5-D150/A/Y
0V - 200 Vdc	25 mA	M5-S200	M5-S200/Y	M5-S200/A	M5-S200/A/Y
0V - +/- 200 Vdc	12 mA	M5-D200	M5-D200/Y	M5-D200/A	M5-D200/A/Y
0V - 300 Vdc	16 mA	M5-S300	M5-S300/Y	M5-S300/A	M5-S300/A/Y
0V - +/- 300 Vdc	8 mA	M5-D300	M5-D300/Y	M5-D300/A	M5-D300/A/Y
0V - 400 Vdc	12 mA	M5-S400	M5-S400/Y	M5-S400/A	M5-S400/A/Y
0V - +/- 400 Vdc	6 mA	M5-D400	M5-D400/Y	M5-D400/A	M5-D400/A/Y
0V - 500 Vdc	10 mA	M5-S500	M5-S500/Y	M5-S500/A	M5-S500/A/Y
0V - +/- 500 Vdc	5 mA	M5-D500	M5-D500/Y	M5-D500/A	M5-D500/A/Y
0V - 600 Vdc	8 mA	M5-S600	M5-S600/Y	M5-S600/A	M5-S600/A/Y
0V - 800 Vdc	6 mA	M5-S800	M5-S800/Y	M5-S800/A	M5-S800/A/Y
0V - 1000 Vdc	5 mA	M5-S1000	M5-S1000/Y	M5-S1000/A	M5-S1000/A/Y

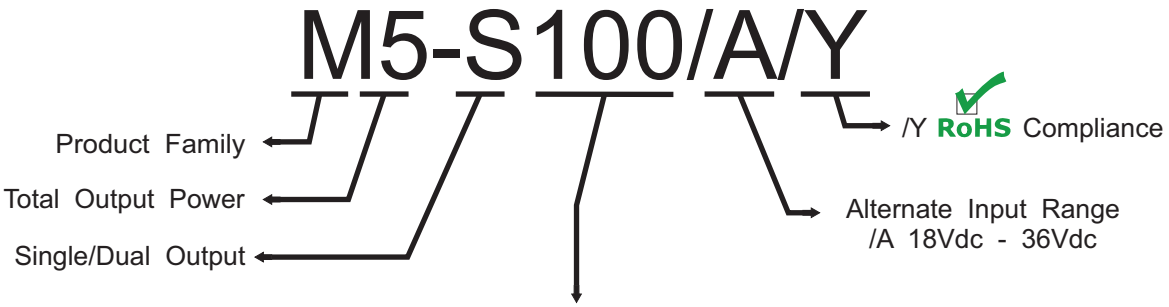

Customer Selects Output Voltage

The M5 Series are designed such that the customer may order any output voltage from 24Vdc to 1000Vdc at no additional charge. (500Vdc max for dual outputs)

M5 SERIES 5 WATT PROGRAMABLE DC/DC CONVERTERS

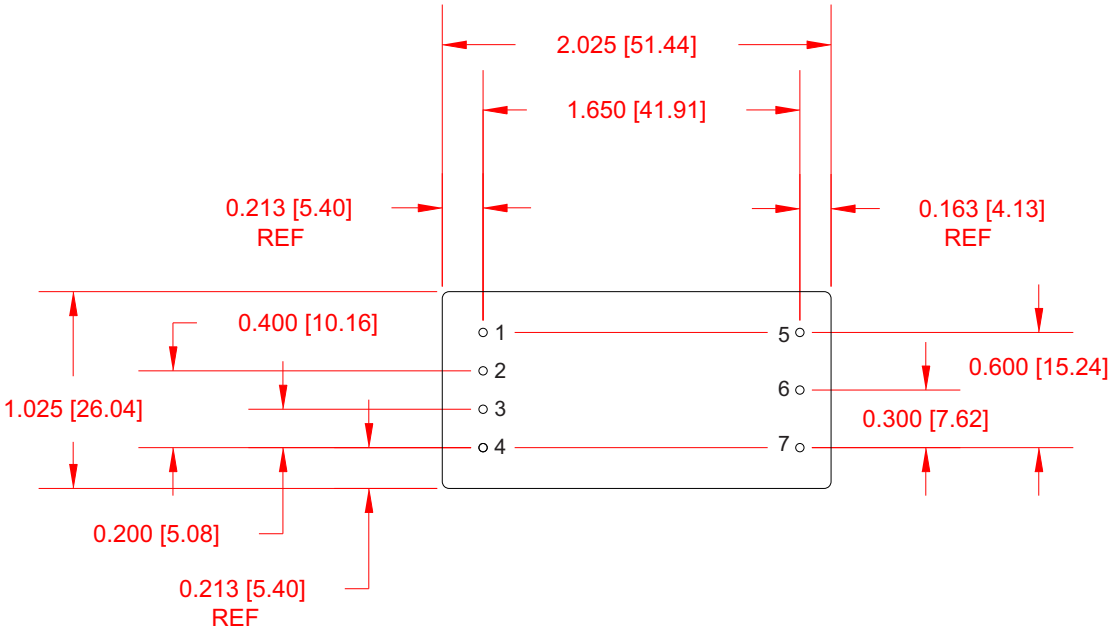

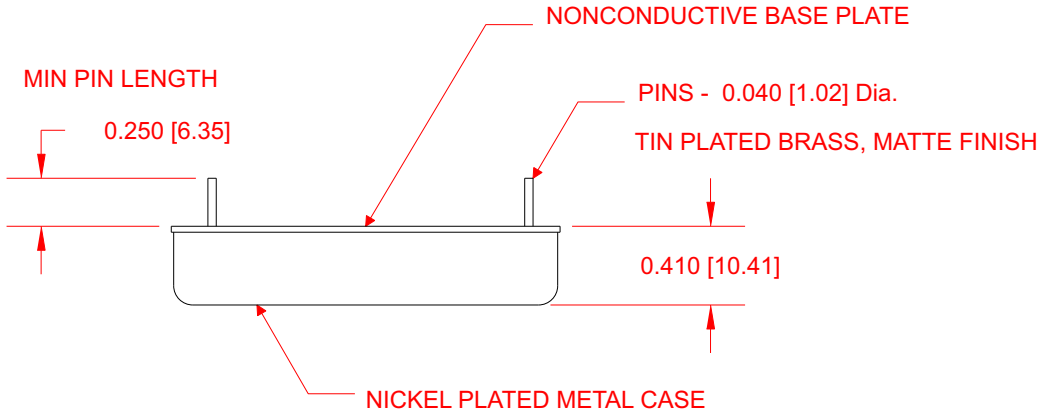

PIN #	SINGLE	DUAL
1	+ Input	+ Input
2	5V Ref	5V Ref
3	Control	Control
4	- Input	- Input
5	+ Output	+ Output
6	No Pin	Com
7	- Output	- Output

Dimensions are in Inches
[Metric equivalents in brackets]

M5 SERIES 5 WATT PROGRAMABLE DC/DC CONVERTERS

APPLICATION NOTES

INPUT AND OUTPUT IMPEDANCE

The M5 Series of power converters have been designed to be stable with no external capacitors when used in low inductance input and output circuits. However, in some applications, the inductance associated with the distribution from the power source to the input of the converter can affect the stability of the converter. The addition of a 100 µF electrolytic capacitor with an ESR <1 Ohm across the input helps ensure stability of the converter. In many applications, the user has to use decoupling capacitance at the load.

SHORT CIRCUIT PROTECTION

The M5 Series is equipped with short circuit protection. The converter will fold-back the input power whenever a short circuit is applied to its output and automatically recover after the overload condition is removed.

ISOLATION

The output of the M5 Series is galvanically isolated from both the input and case, capacitance is < 80pF and resistance is > 10G Ohm. The converters case is connected directly to -In to aid in reducing unwanted noise.

RIPPLE AND NOISE

Figure below shows a typical output voltage ripple waveform, measured at full rated load current with no additional output filtering. External low ESR capacitors may be added across output to further reduce ripple.

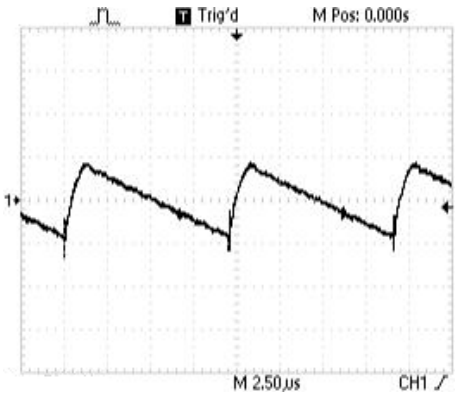

STARTUP TRANSIENT

Figure below shows a typical output voltage during turn-on, measured at 20% load current with no additional output filtering.

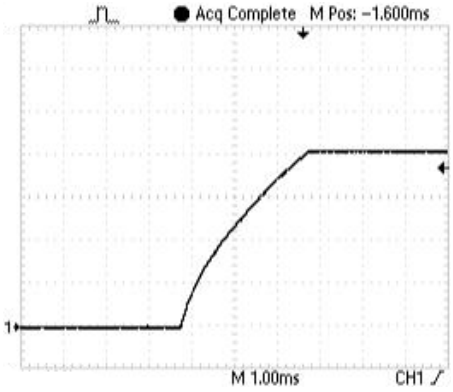

Figure below shows a typical output voltage during turn-on, measured at full rated load current with no additional output filtering.

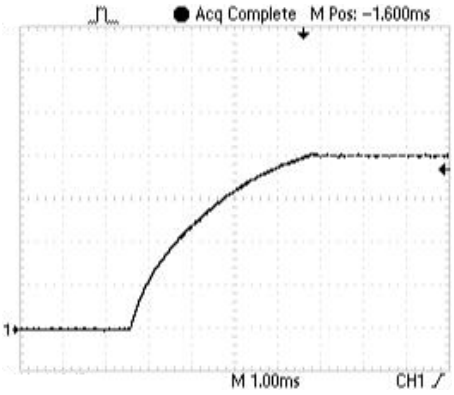

M5 SERIES 5 WATT PROGRAMABLE DC/DC CONVERTERS

APPLICATION NOTES

INRUSH CURRENT

The inrush current of the M5 Series has been kept as low as possible. However, a series resistor may be inserted in the input line to limit this current further.

LOAD TRANSIENT

Figure below shows a typical output voltage response, measured during a transition from full rated load current to 20% load current with no additional output filtering.

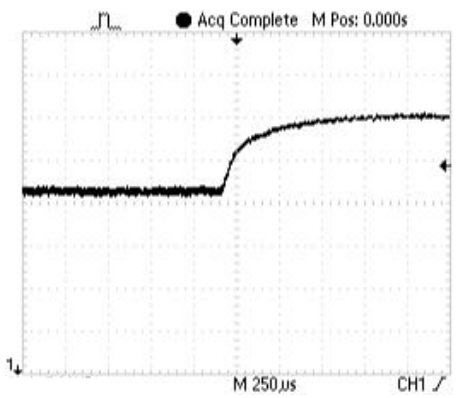

Figure below shows a typical output voltage response, measured during a transition from 20% load current to full rated load current with no additional output filtering.

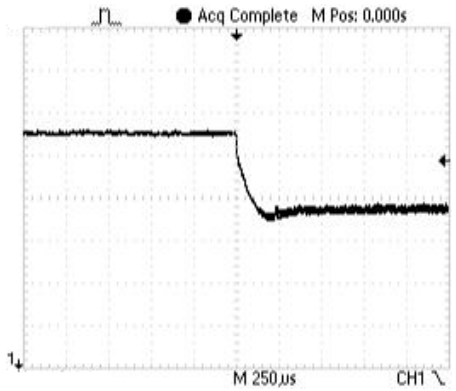

CONNECTION IN PARALLEL

The figures below show how to connect both single and dual outputs of several units with equal nominal output voltage in parallel.

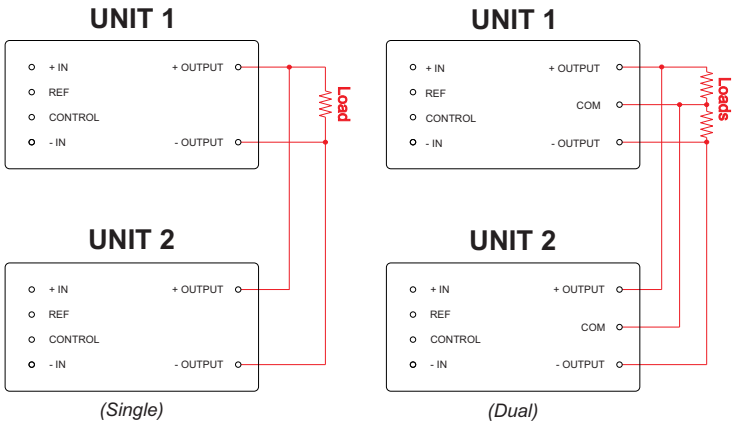

CONNECTION IN SERIES

The figures below shows how to connect multiple outputs in series with the use of shunt diodes, taking into consideration that the highest achieved output voltage should remain below the rated isolation voltage.

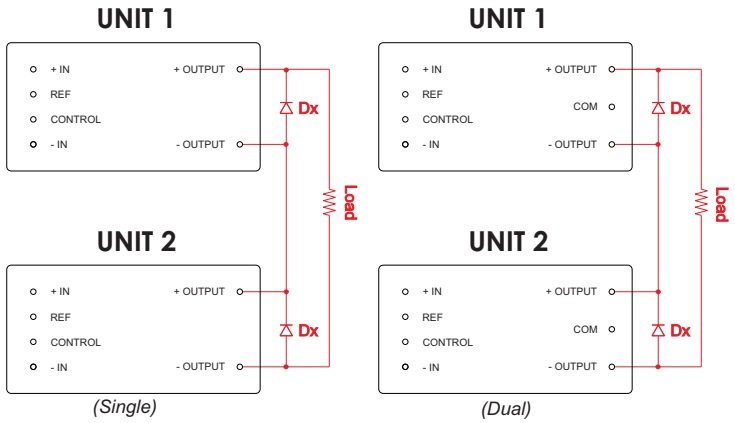

NOTE:
The ratings of Dx should be 1.5 times the maximum current and voltage expected in each branch.

M5 SERIES 5 WATT PROGRAMABLE DC/DC CONVERTERS

APPLICATION NOTES

Remote Control

The M5 Series is equipped with an output Control pin (Pin 3). This feature allows the user to adjust the output voltage from 0 to 100% of the rated output voltage using a fixed precision resistor or adjustable trim pot in conjunction with the on board reference (Pin 2).

The figure below shows how to adjust the output voltage using a fixed precision resistor.

Control Voltage can be calculated by:

$$V_{control} = 5 \times \frac{R2}{R1 + R2}$$

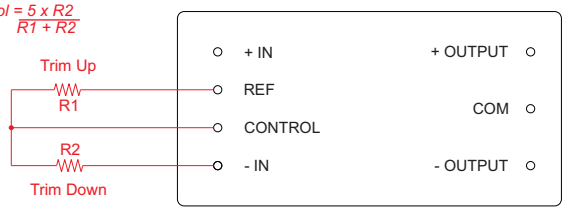

NOTE:
Do not exceed 1mA when selecting R1 & R2.

The figure below shows how to adjust the output voltage using an external Trim Pot.

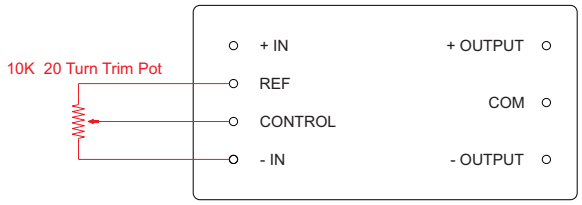

The figure below shows how to combine both of the prior configurations to form upper and lower boundaries for the adjustable range.

Upper Limit $= \frac{5 \times (R2 + 10k)}{R1 + R2 + 10k}$

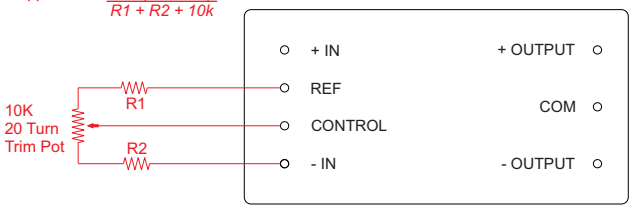

Lower Limit $= \frac{5 \times R2}{R1 + R2 + 10k}$

Figure below shows how to remotely mechanically shutdown the converter while maintaining any preset control voltage.

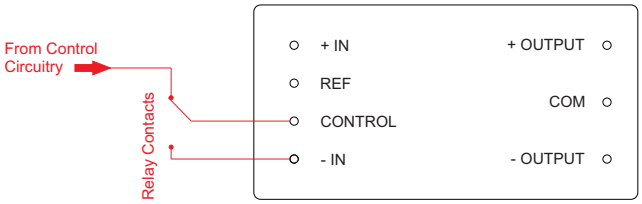

Output Voltage Tracking

The M5 Series is a semi-regulated and as a result there are many factors that effect the way the output voltage tracks the Control pin (Pin 3). Input regulation and load current are two of the primary influences.

Figure below show a typical plot of both the actual and calculated output voltage as a function of control voltage.

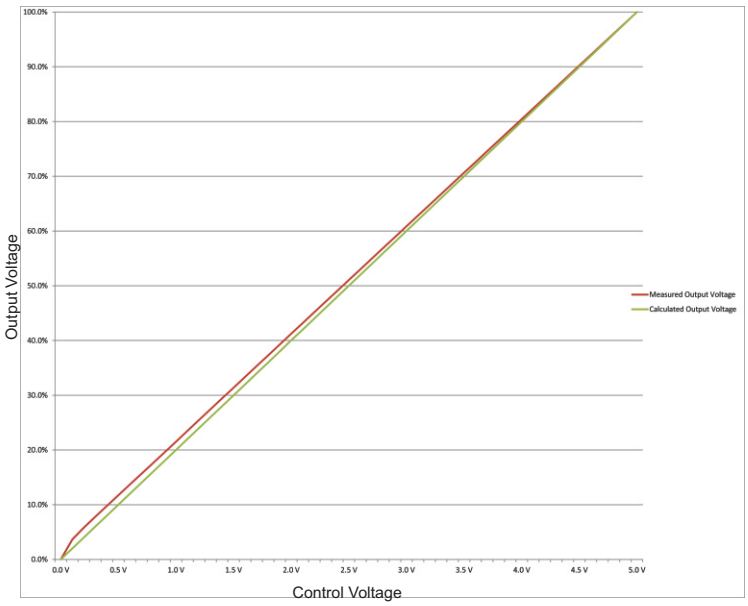

Operating Conditions:

Nominal Input Voltage = Fixed
Output Load = Resistive (fixed at full output current @ 100% output voltage)

M5 SERIES 5 WATT PROGRAMABLE DC/DC CONVERTERS

APPLICATION NOTES

CLEANING AGENTS

In order to avoid possible damage, any penetration of cleaning fluids must be prevented, since the power supplies are not hermetically sealed.

NUCLEAR AND MEDICAL APPLICATIONS

American Power Design products are not designed, intended for use in, or authorized for use as critical components in life support systems, equipment used in hazardous environments, or nuclear control systems without the express written consent of American Power Design, Inc.

TECHNICAL REVISIONS

The appearance of products, including safety agency certifications pictured on labels, may change depending on the date manufactured. Specifications are subject to change without notice.

SAFETY REQUIREMENTS

The converters are designed to meet North American and International safety regulatory requirements per UL 60950-1/CSA 22.2 No. 60950-1-07 Second Edition, IEC 60950-1: 2005, and EN 60950-1:2006. Basic Insulation is provided between input and output. To comply with safety agencies requirements, an input line fuse must be used external to the converter. The table below provides the recommended fuse rating for use with this family of products.

Input Voltage Range	Fuse Rating
10-20Vdc	1A
18-36Vdc	0.5A

If one input fuse is used for a group of modules, the maximum fuse rating should not exceed 10A.

WARRANTY

All products manufactured by American Power Design, Inc. (APD) are warranted to be free of defects due to material or workmanship for a period of one year from date of shipment. At our option, APD will repair or replace any non-conforming product.
APD expressly disclaims any liability for consequential or incidental damages resulting from the use or misuse of its products by the purchaser or others.
This warranty is in lieu of all warranties expressed or implied, including the warranties of merchantability. No other warranties, obligations, or liabilities are expressed or implied.
All products being returned for repair require a return material authorization(RMA) assigned by APD prior to return shipment.

American Power Design, Inc.

"The best high voltage design solution"

RoHS

M10 SERIES 10 WATT PROGRAMABLE DC/DC CONVERTERS

FEATURES

- Customer Selects Output Voltage
- Outputs to 1000 Vdc
- Fully Programable Outputs
- Single and Dual Outputs
- Wide Input Ranges
  (10-20Vdc , 18-36Vdc)
- 1000 Vdc Output Isolation
- Continuous Short Circuit Protection

The M10 Series high voltage DC/DC converter offers 100% programable single or dual high voltage outputs using a 0-5Vdc analog signal. Each model is enclosed in a six-sided shielded metal case and has 1000Vdc of isolation allowing one model to be utilized for both positive or negative applications. All models will tolerate a short circuit indefinitely.

ELECTRICAL SPECIFICATIONS

Voltage Accuracy	+/- 3%
Line Regulation	+/- 2%
Load Regulation	+/- 4% (20% to full Load)
Output Ripple	< 0.5 % P-P
Reference Voltage	5Vdc @ 1mA
Input Filter	Low ESR Capacitor
Efficiency	85% (typ.)
Short Circuit Protection	Continuous
Switching Frequency	130 kHz
Output Isolation	1000 Vdc
Input / Output Capacitance	< 80pF

GENERAL SPECIFICATIONS

Temp. Stability	+/- 0.02%/°C
Temp. (Operating , Case)	-25 to +70°C
Temp. (Storage)	-40 to +125°C
EMI/RFI	Six Sided Shield
Derating	None
Cooling	Free-Air Convection

PHYSICAL SPECIFICATIONS

Dimensions	2 x 2 x 0.50 inches
Weight	2.5 Oz
Case Material	Nickel Plated Metal *(With Non-Conductive Base Plate)*

Tel (888) 894-4446 WWW.APOWERDESIGN.COM Fax (603) 898-6534

M10 SERIES 10 WATT PROGRAMABLE DC/DC CONVERTERS

REPRESENTATIVE MODEL LISTING					
OUTPUT SPECIFICATIONS		MODEL NUMBER / INPUT RANGE			
VOLTAGE	CURRENT	10-20VDC		18-36VDC	
		Non-RoHs	RoHs	Non-RoHs	RoHs
0V - 24 Vdc	416 mA	M10-S24	M10-S24/Y	M10-S24/A	M10-S24/A/Y
0V - +/- 24 Vdc	208 mA	M10-D24	M10-D24/Y	M10-D24/A	M10-D24/A/Y
0V - 48 Vdc	208 mA	M10-S48	M10-S48/Y	M10-S48/A	M10-S48/A/Y
0V - +/- 48 Vdc	104 mA	M10-D48	M10-D48/Y	M10-D48/A	M10-D48/A/Y
0V - 100Vdc	100 mA	M10-S100	M10-S100/Y	M10-S100/A	M10-S100/A/Y
0V - +/- 100Vdc	50 mA	M10-D100	M10-D100/Y	M10-D100/A	M10-D100/A/Y
0V - 150 Vdc	66 mA	M10-S150	M10-S150/Y	M10-S150/A	M10-S150/A/Y
0V - +/- 150 Vdc	33 mA	M10-D150	M10-D150/Y	M10-D150/A	M10-D150/A/Y
0V - 200 Vdc	50 mA	M10-S200	M10-S200/Y	M10-S200/A	M10-S200/A/Y
0V - +/- 200 Vdc	25 mA	M10-D200	M10-D200/Y	M10-D200/A	M10-D200/A/Y
0V - 300 Vdc	33 mA	M10-S300	M10-S300/Y	M10-S300/A	M10-S300/A/Y
0V - +/- 300 Vdc	16 mA	M10-D300	M10-D300/Y	M10-D300/A	M10-D300/A/Y
0V - 400 Vdc	25 mA	M10-S400	M10-S400/Y	M10-S400/A	M10-S400/A/Y
0V - +/- 400 Vdc	12 mA	M10-D400	M10-D400/Y	M10-D400/A	M10-D400/A/Y
0V - 500 Vdc	20 mA	M10-S500	M10-S500/Y	M10-S500/A	M10-S500/A/Y
0V - +/- 500 Vdc	10 mA	M10-D500	M10-D500/Y	M10-D500/A	M10-D500/A/Y
0V - 600 Vdc	16 mA	M10-S600	M10-S600/Y	M10-S600/A	M10-S600/A/Y
0V - 800 Vdc	12 mA	M10-S800	M10-S800/Y	M10-S800/A	M10-S800/A/Y
0V - 1000 Vdc	10 mA	M10-S1000	M10-S1000/Y	M10-S1000/A	M10-S1000/A/Y

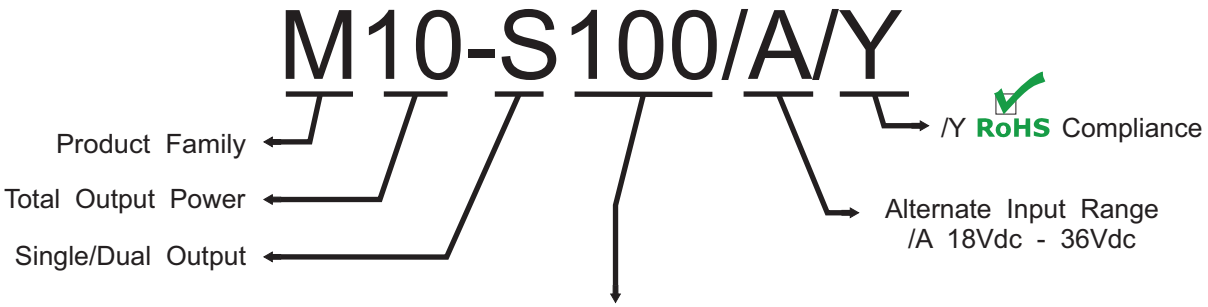

Customer Selects Output Voltage

The M10 Series are designed such that the customer may order any output voltage from 24Vdc to 1000Vdc at no additional charge. (500Vdc max for dual outputs)

M10 SERIES 10 WATT PROGRAMABLE DC/DC CONVERTERS

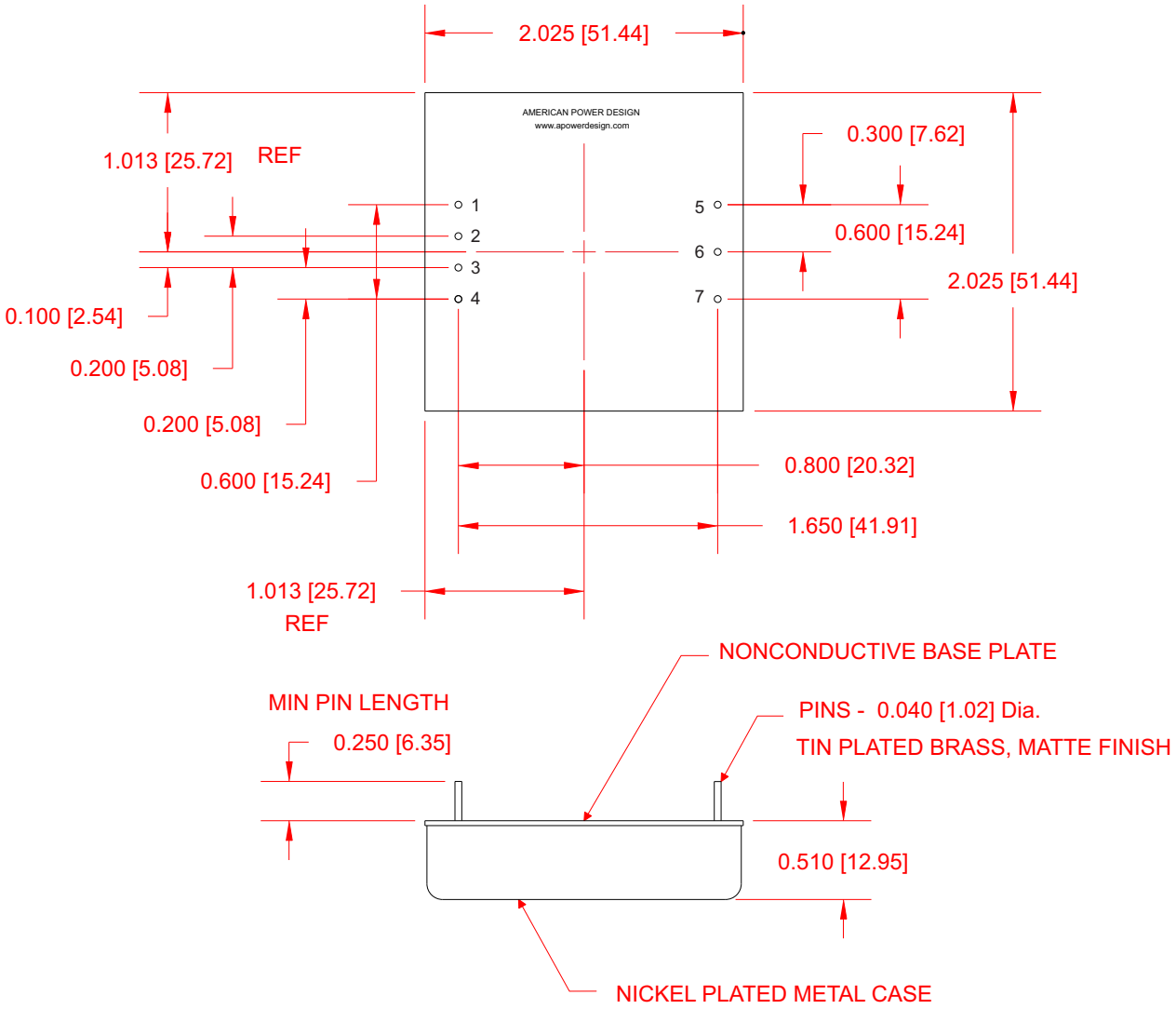

PIN #	SINGLE	DUAL
1	+ Input	+ Input
2	5V Ref	5V Ref
3	Control	Control
4	- Input	- Input
5	+ Output	+ Output
6	No Pin	Com
7	- Output	- Output

Dimensions are in Inches
[Metric equivalents in brackets]

M10 SERIES 10 WATT PROGRAMABLE DC/DC CONVERTERS

APPLICATION NOTES

INPUT AND OUTPUT IMPEDANCE

The M10 Series of power converters have been designed to be stable with no external capacitors when used in low inductance input and output circuits. However, in some applications, the inductance associated with the distribution from the power source to the input of the converter can affect the stability of the converter. The addition of a 100 µF electrolytic capacitor with an ESR <1 Ohm across the input helps ensure stability of the converter. In many applications, the user has to use decoupling capacitance at the load.

SHORT CIRCUIT PROTECTION

The M10 Series is equipped with short circuit protection. The converter will fold-back the input power whenever a short circuit is applied to its output and automatically recover after the overload condition is removed.

ISOLATION

The output of the M10 Series is galvanically isolated from both the input and case, capacitance is < 80pF and resistance is > 10G Ohm. The converters case is connected directly to -In to aid in reducing unwanted noise.

RIPPLE AND NOISE

Figure below shows a typical output voltage ripple waveform, measured at full rated load current with no additional output filtering. External low ESR capacitors may be added across output to further reduce ripple.

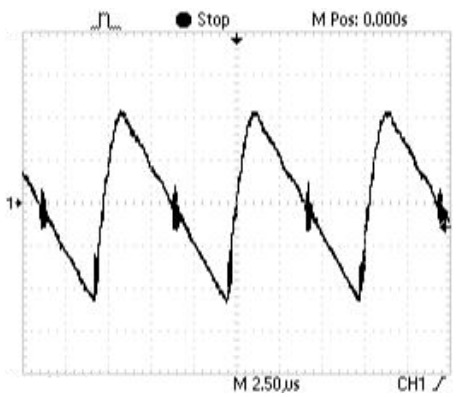

STARTUP TRANSIENT

Figure below shows a typical output voltage during turn-on, measured at 20% load current with no additional output filtering.

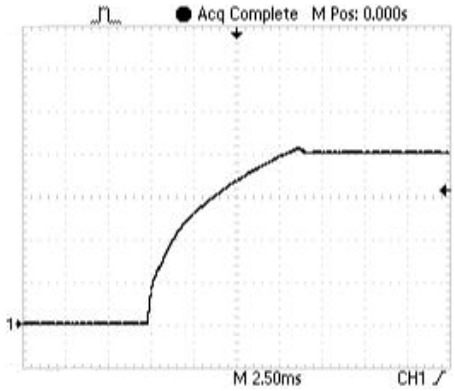

Figure below shows a typical output voltage during turn-on, measured at full rated load current with no additional output filtering.

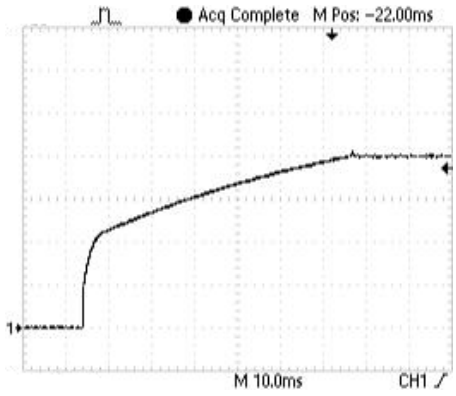

M10 SERIES 10 WATT PROGRAMABLE DC/DC CONVERTERS

APPLICATION NOTES

INRUSH CURRENT

The inrush current of the M10 Series has been kept as low as possible. However, a series resistor may be inserted in the input line to limit this current further.

LOAD TRANSIENT

Figure below shows a typical output voltage response, measured during a transition from full rated load current to 20% load current with no additional output filtering.

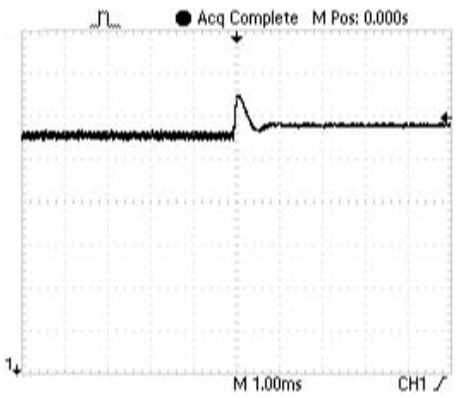

Figure below shows a typical output voltage response, measured during a transition from 20% load current to full rated load current with no additional output filtering.

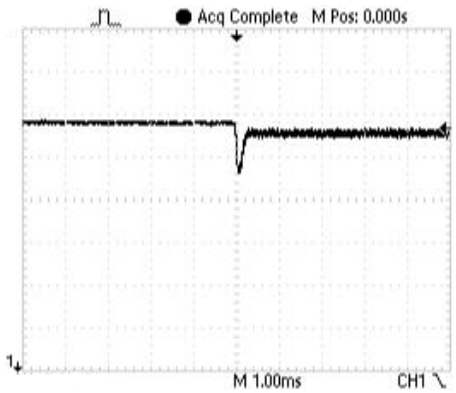

CONNECTION IN PARALLEL

The figures below show how to connect both single and dual outputs of several units with equal nominal output voltage in parallel.

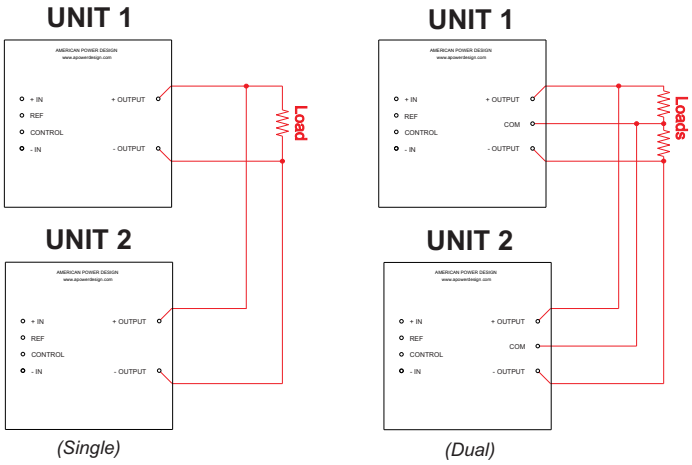

CONNECTION IN SERIES

The figures below show how to connect multiple outputs in series with the use of shunt diodes, taking into consideration that the highest achieved output voltage should remain below the rated isolation voltage.

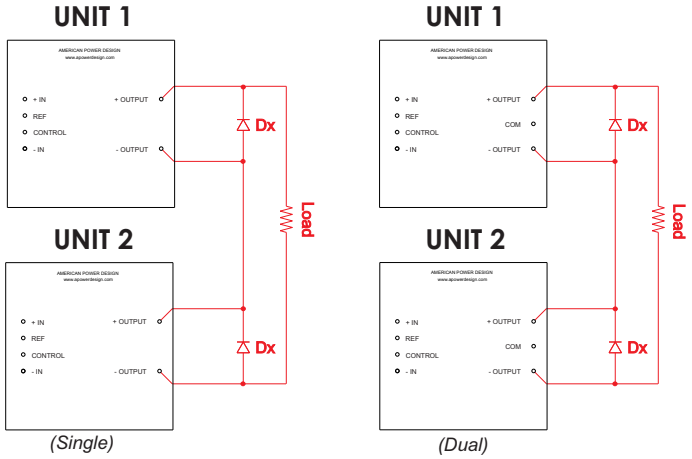

NOTE:
The ratings of Dx should be 1.5 times the maximum current and voltage expected in each branch.

M10 SERIES 10 WATT PROGRAMABLE DC/DC CONVERTERS

APPLICATION NOTES

Remote Control

The M10 Series is equipped with an output Control pin (Pin 3). This feature allows the user to adjust the output voltage from 0 to 100% of the rated output voltage using a fixed precision resistor or adjustable trim pot in conjunction with the on board reference (Pin 2).

The figure below shows how to adjust the output voltage using a fixed precision resistor.

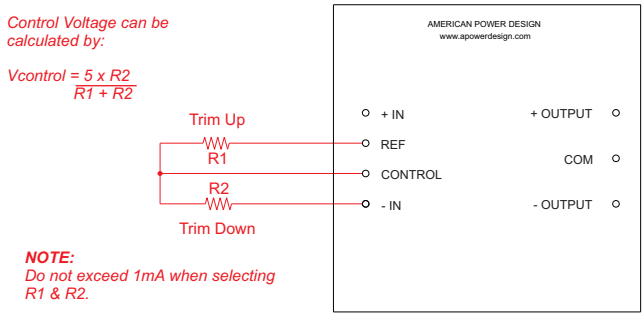

The figure below shows how to adjust the output voltage using an external Trim Pot.

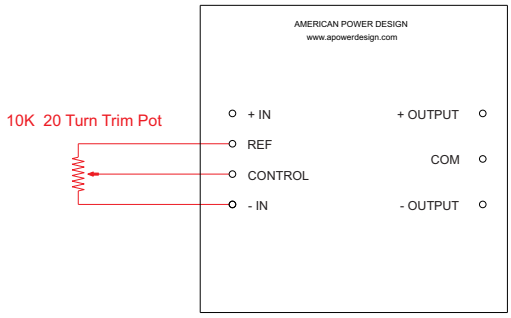

The figure below shows how to combine both of the prior configurations to form upper and lower boundaries for the adjustable range.

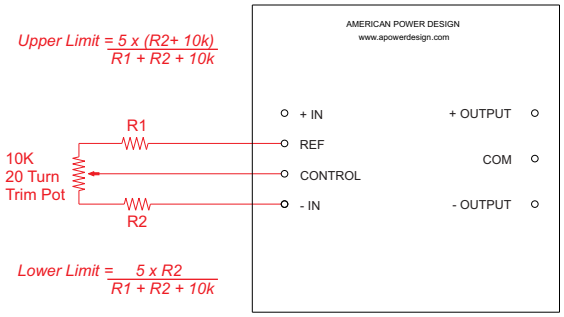

Figure below shows how to remotely mechanically shutdown the converter while maintaining any preset control voltage.

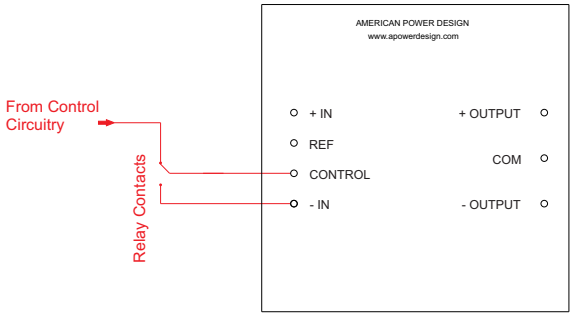

Output Voltage Tracking

The M10 Series is a semi-regulated converter and as a result there are many factors that affect the way the output voltage tracks the Control pin (Pin 3). Input regulation and load current are two of the primary influences.

Figure below show a typical plot of both the actual and calculated output voltage as a function of control voltage.

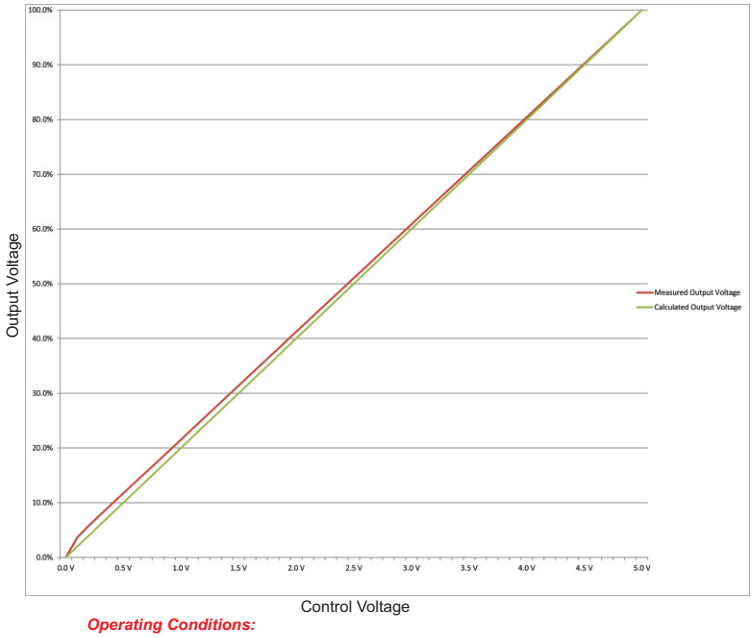

Operating Conditions:

Nominal Input Voltage = Fixed
Output Load = Resistive (fixed at full output current @ 100% output voltage)

M10 SERIES 10 WATT PROGRAMABLE DC/DC CONVERTERS

APPLICATION NOTES

CLEANING AGENTS

In order to avoid possible damage, any penetration of cleaning fluids must be prevented, since the power supplies are not hermetically sealed.

TECHNICAL REVISIONS

The appearance of products, including safety agency certifications pictured on labels, may change depending on the date manufactured. Specifications are subject to change without notice.

NUCLEAR AND MEDICAL APPLICATIONS

American Power Design products are not designed, intended for use in, or authorized for use as critical components in life support systems, equipment used in hazardous environments, or nuclear control systems without the express written consent of American Power Design, Inc.

SAFETY REQUIREMENTS

The converters are designed to meet North American and International safety regulatory requirements per UL 60950-1/CSA 22.2 No. 60950-1-07 Second Edition, IEC 60950-1: 2005, and EN 60950-1:2006. Basic Insulation is provided between input and output. To comply with safety agencies requirements, an input line fuse must be used external to the converter. The table below provides the recommended fuse rating for use with this family of products.

Input Voltage Range	Fuse Rating
10-20Vdc	1.5A
18-36Vdc	1A

If one input fuse is used for a group of modules, the maximum fuse rating should not exceed 10A.

WARRANTY

All products manufactured by American Power Design, Inc. (APD) are warranted to be free of defects due to material or workmanship for a period of one year from date of shipment. At our option, APD will repair or replace any non-conforming product.
APD expressly disclaims any liability for consequential or incidental damages resulting from the use or misuse of its products by the purchaser or others.
This warranty is in lieu of all warranties expressed or implied, including the warranties of merchantability. No other warranties, obligations, or liabilities are expressed or implied.
All products being returned for repair require a return material authorization(RMA) assigned by APD prior to return shipment.

American Power Design, Inc.

"The best high voltage design solution"

RoHS

M30 SERIES 30 WATT PROGRAMABLE DC/DC CONVERTERS

FEATURES

- Customer Selects Output Voltage
- Outputs to 1000 Vdc
- Fully Programable Outputs
- Single and Dual Outputs
- Ultra Wide Input Ranges
  (10-20Vdc , 18-36Vdc)
- 1500 Vdc Output Isolation
- Continuous Short Circuit Protection

The M30 Series high voltage DC/DC converter offers 100% programmable single or dual high voltage outputs using a 0-5Vdc analog signal. Each model is enclosed in a six-sided shielded metal case and has 1500Vdc of isolation allowing one model to be utilized for both positive or negative applications. All models will tolerate a short circuit indefinitely.

ELECTRICAL SPECIFICATIONS

Voltage Accuracy	+/- 3%
Line Regulation	+/- 2%
Load Regulation	+/- 4% (20% to full Load)
Output Ripple	< 0.4 % P-P
Reference Voltage	5Vdc @ 1mA
Input Filter	Pi Network
Efficiency	87% (typ.)
Short Circuit Protection	Continuous
Switching Frequency	130 kHz
Output Isolation	1500 Vdc
Input / Output Capacitance	< 80pF

GENERAL SPECIFICATIONS

Temp. Stability	+/- 0.02%/°C
Temp. (Operating , Case)	-25 to +70°C
Temp. (Storage)	-40 to +125°C
EMI/RFI	Six Sided Shield
Derating	None
Cooling	Free-Air Convection

PHYSICAL SPECIFICATIONS

Dimensions	2.6 x 3 x 0.84 inches
Weight	8.4 Oz
Case Material	Nickel Plated Metal *(With Non-Conductive Base Plate)*

M30 SERIES 30 WATT PROGRAMABLE DC/DC CONVERTERS

REPRESENTATIVE MODEL LISTING					
OUTPUT SPECIFICATIONS		MODEL NUMBER / INPUT RANGE			
VOLTAGE	CURRENT	10-20VDC		18-36VDC	
		Non-RoHs	RoHs	Non-RoHs	RoHs
0V - 48 Vdc	625 mA	M30-S48	M30-S48/Y	M30-S48/A	M30-S48/A/Y
0V - +/- 48 Vdc	312 mA	M30-D48	M30-D48/Y	M30-D48/A	M30-D48/A/Y
0V - 100Vdc	300 mA	M30-S100	M30-S100/Y	M30-S100/A	M30-S100/A/Y
0V - +/- 100Vdc	150 mA	M30-D100	M30-D100/Y	M30-D100/A	M30-D100/A/Y
0V - 150 Vdc	200 mA	M30-S150	M30-S150/Y	M30-S150/A	M30-S150/A/Y
0V - +/- 150 Vdc	100 mA	M30-D150	M30-D150/Y	M30-D150/A	M30-D150/A/Y
0V - 200 Vdc	150 mA	M30-S200	M30-S200/Y	M30-S200/A	M30-S200/A/Y
0V - +/- 200 Vdc	75 mA	M30-D200	M30-D200/Y	M30-D200/A	M30-D200/A/Y
0V - 300 Vdc	100 mA	M30-S300	M30-S300/Y	M30-S300/A	M30-S300/A/Y
0V - +/- 300 Vdc	50 mA	M30-D300	M30-D300/Y	M30-D300/A	M30-D300/A/Y
0V - 400 Vdc	75 mA	M30-S400	M30-S400/Y	M30-S400/A	M30-S400/A/Y
0V - +/- 400 Vdc	37 mA	M30-D400	M30-D400/Y	M30-D400/A	M30-D400/A/Y
0V - 500 Vdc	60 mA	M30-S500	M30-S500/Y	M30-S500/A	M30-S500/A/Y
0V - +/- 500 Vdc	30 mA	M30-D500	M30-D500/Y	M30-D500/A	M30-D500/A/Y
0V - 600 Vdc	50 mA	M30-S600	M30-S600/Y	M30-S600/A	M30-S600/A/Y
0V - 800 Vdc	37 mA	M30-S800	M30-S800/Y	M30-S800/A	M30-S800/A/Y
0V - 1000 Vdc	30 mA	M30-S1000	M30-S1000/Y	M30-S1000/A	M30-S1000/A/Y

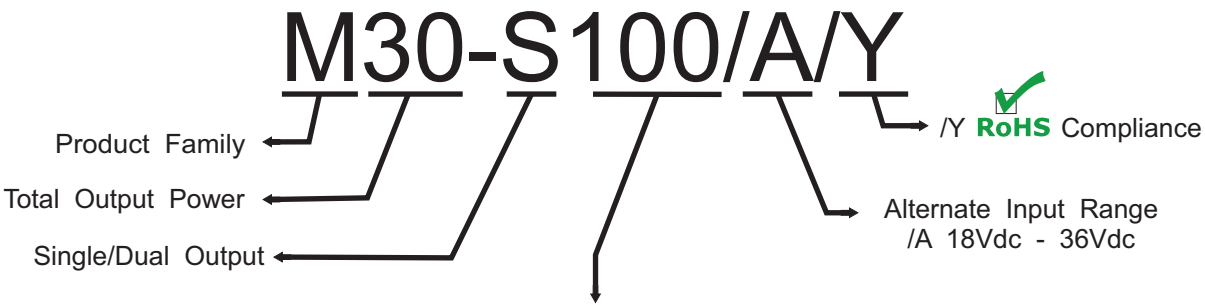

Customer Selects Output Voltage

The M30 Series are designed such that the customer may order any output voltage from 48Vdc to 1000Vdc at no additional charge.

M30 SERIES 30 WATT PROGRAMABLE DC/DC CONVERTERS

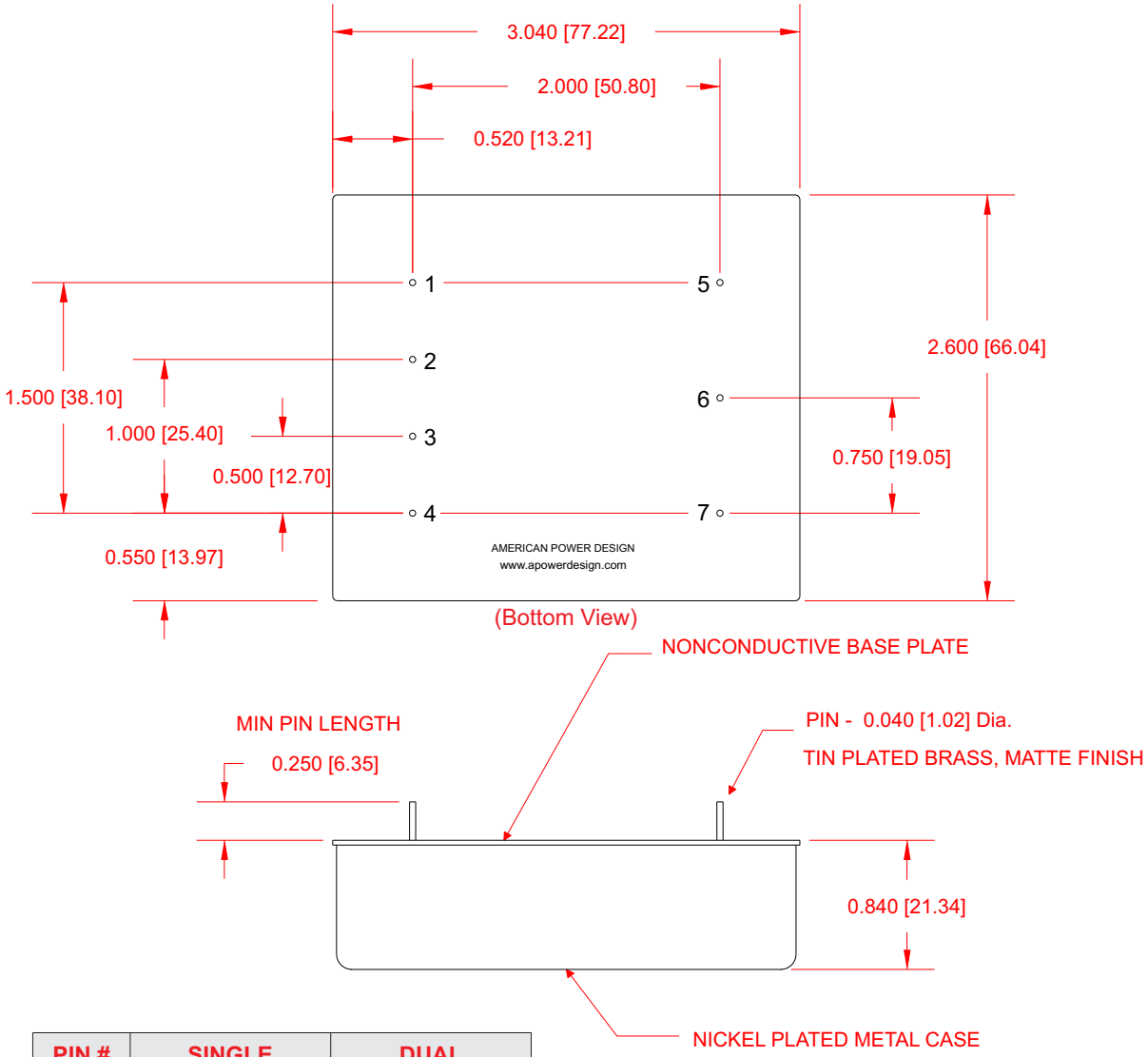

PIN #	SINGLE	DUAL
1	5V Ref	5V Ref
2	+ Input	+ Input
3	Control	Control
4	- Input	- Input
5	+ Output	+ Output
6	No Pin	Com
7	- Output	- Output

Dimensions are in Inches
[Metric equivalents in brackets]

M30 SERIES 30 WATT PROGRAMABLE DC/DC CONVERTERS

APPLICATION NOTES

INPUT AND OUTPUT IMPEDANCE

The M30 Series of power converters have been designed to be stable with no external capacitors when used in low inductance input and output circuits. However, in some applications, the inductance associated with the distribution from the power source to the input of the converter can affect the stability of the converter. The addition of a 100 µF electrolytic capacitor with an ESR <1 Ohm across the input helps ensure stability of the converter. In many applications, the user has to use decoupling capacitance at the load.

SHORT CIRCUIT PROTECTION

The M30 Series is equipped with short circuit protection. The converter will fold-back the input power whenever a short circuit is applied to its output and automatically recover after the overload condition is removed.

ISOLATION

The output of the M30 Series is galvanically isolated from both the input and case, capacitance is < 80pF and resistance is > 10G Ohm. The converters case is connected directly to -In to aid in reducing unwanted noise.

RIPPLE AND NOISE

Figure below shows a typical output voltage ripple waveform, measured at full rated load current with no additional output filtering. External low ESR capacitors may be added across output to further reduce ripple.

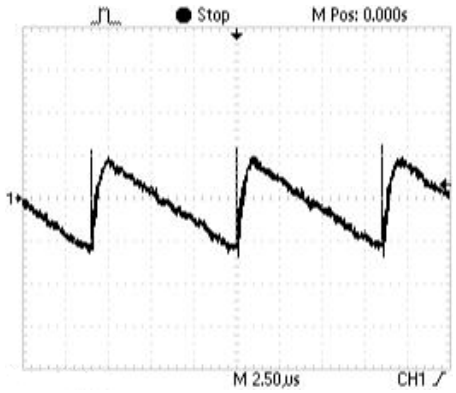

STARTUP TRANSIENT

Figure below shows a typical output voltage during turn-on, measured at 20% load current with no additional output filtering.

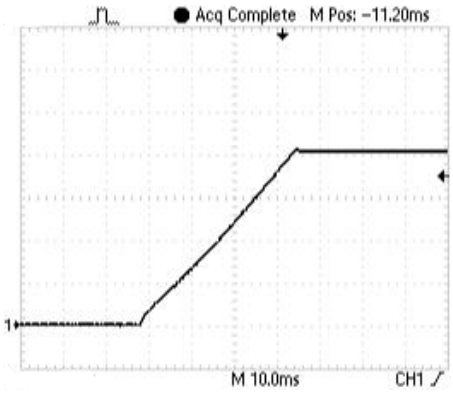

Figure below shows a typical output voltage during turn-on, measured at full rated load current with no additional output filtering.

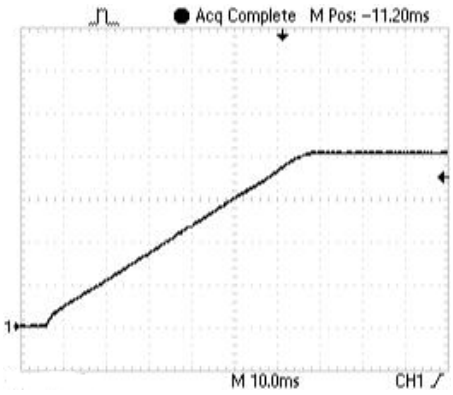

M30 SERIES 30 WATT PROGRAMABLE DC/DC CONVERTERS

APPLICATION NOTES

INRUSH CURRENT

The inrush current of the M30 Series has been kept as low as possible. However, a series resistor may be inserted in the input line to limit this current further.

LOAD TRANSIENT

Figure below shows a typical output voltage response, measured during a transition from full rated load current to 20% load current with no additional output filtering.

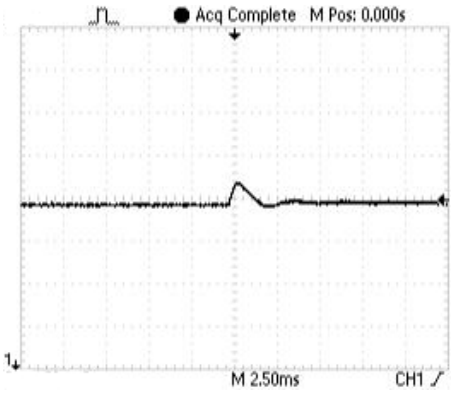

Figure below shows a typical output voltage response, measured during a transition from 20% load current to full rated load current with no additional output filtering.

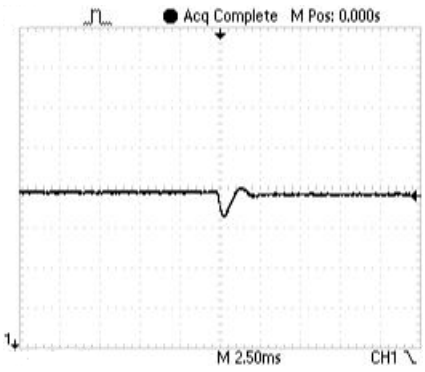

CONNECTION IN PARALLEL

The figures below show how to connect both single and dual outputs of several units with equal nominal output voltage in parallel.

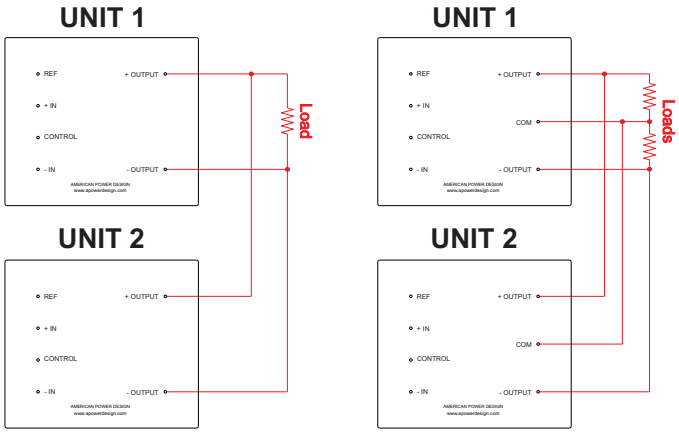

(Single) (Dual)

CONNECTION IN SERIES

The figures below show how to connect multiple outputs in series with the use of shunt diodes, taking into consideration that the highest achieved output voltage should remain below the rated isolation voltage.

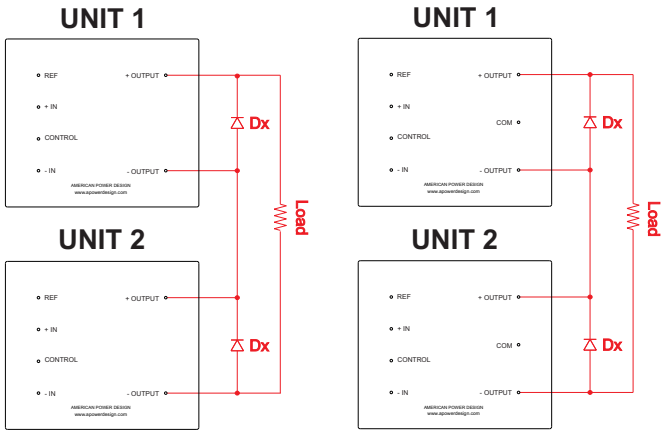

(Single) (Dual)

NOTE:
The ratings of Dx should be 1.5 times the maximum current and voltage expected in each branch.

M30 SERIES 30 WATT PROGRAMABLE DC/DC CONVERTERS

APPLICATION NOTES

Remote Control

The M30 Series is equipped with an output Control pin (Pin 3). This feature allows the user to adjust the output voltage from 0 to 100% of the rated output voltage using a fixed precision resistor or adjustable trim pot in conjunction with the on board reference (Pin 2).

The figure below shows how to adjust the output voltage using a fixed precision resistor.

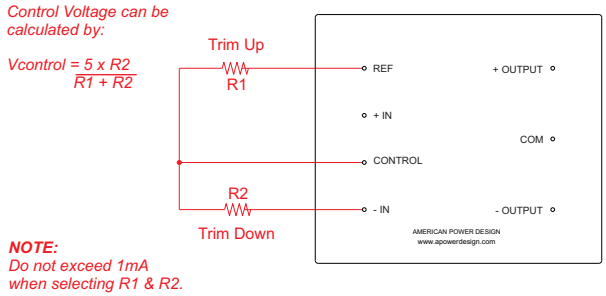

The figure below shows how to adjust the output voltage using an external Trim Pot.

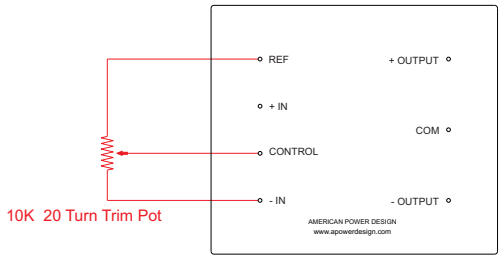

The figure below shows how to combine both of the prior configurations to form upper and lower boundaries for the adjustable range.

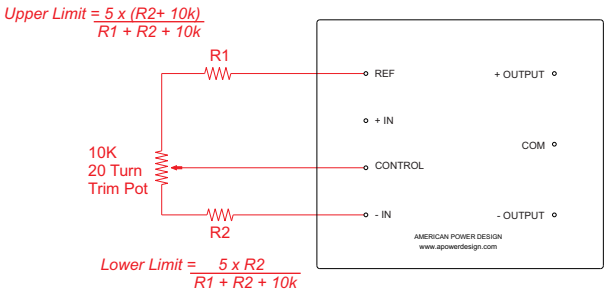

Figure below shows how to remotely mechanically shutdown the converter while maintaining any preset control voltage.

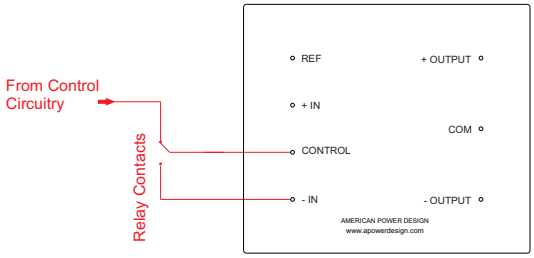

Output Voltage Tracking

The M30 Series is a semi-regulated converter and as a result there are many factors that affect the way the output voltage tracks the Control pin (Pin 3). Input regulation and load current are two of the primary influences.

Figure below show a typical plot of both the actual and calculated output voltage as a function of control voltage.

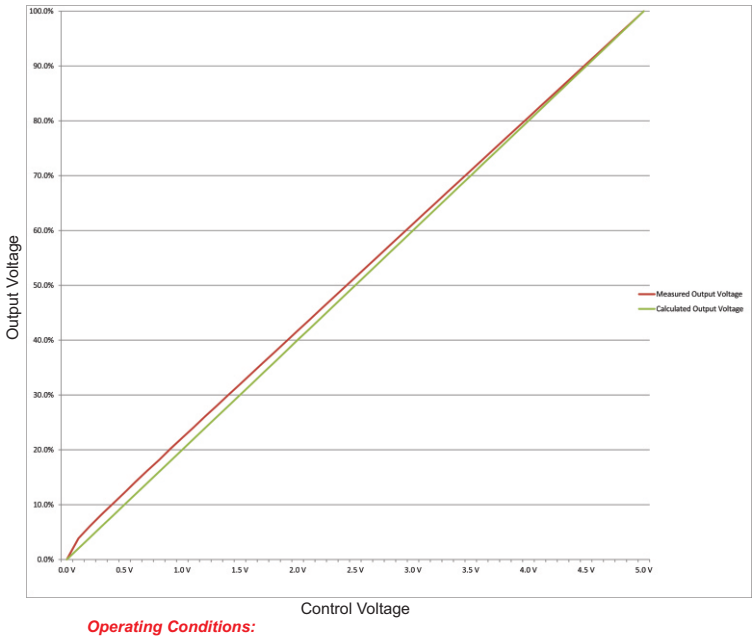

Operating Conditions:

Nominal Input Voltage = Fixed
Output Load = Resistive (fixed at full output current @ 100% output voltage)

M30 SERIES 30 WATT PROGRAMABLE DC/DC CONVERTERS

APPLICATION NOTES

CLEANING AGENTS

In order to avoid possible damage, any penetration of cleaning fluids must be prevented, since the power supplies are not hermetically sealed.

NUCLEAR AND MEDICAL APPLICATIONS

American Power Design products are not designed, intended for use in, or authorized for use as critical components in life support systems, equipment used in hazardous environments, or nuclear control systems without the express written consent of American Power Design, Inc.

TECHNICAL REVISIONS

The appearance of products, including safety agency certifications pictured on labels, may change depending on the date manufactured. Specifications are subject to change without notice.

SAFETY REQUIREMENTS

The converters are designed to meet North American and International safety regulatory requirements per UL 60950-1/CSA 22.2 No. 60950-1-07 Second Edition, IEC 60950-1: 2005, and EN 60950-1:2006. Basic Insulation is provided between input and output. To comply with safety agencies requirements, an input line fuse must be used external to the converter. The table below provides the recommended fuse rating for use with this family of products.

Input Voltage Range	Fuse Rating
10-20Vdc	5A
18-36Vdc	3A

If one input fuse is used for a group of modules, the maximum fuse rating should not exceed 10A.

WARRANTY

All products manufactured by American Power Design, Inc. (APD) are warranted to be free of defects due to material or workmanship for a period of one year from date of shipment. At our option, APD will repair or replace any non-conforming product.
APD expressly disclaims any liability for consequential or incidental damages resulting from the use or misuse of its products by the purchaser or others.
This warranty is in lieu of all warranties expressed or implied, including the warranties of merchantability. No other warranties, obligations, or liabilities are expressed or implied.
All products being returned for repair require a return material authorization(RMA) assigned by APD prior to return shipment.

American Power Design, Inc.

"The best high voltage design solution"

RoHS

P1 SERIES 1 WATT PROPORTIONAL HV DC/DC CONVERTERS

FEATURES

- Customer Selects Output Voltage
- Single Outputs to + or - 6000 Vdc
- Dual Outputs to +/- 3000 Vdc
- Low Power Consumption
- High Reliability
- Industry Standard Pinouts
- Wide Temperature Range (-25 to +85°C)
- 60 kHz Switching Frequency
- 3500 Vdc Output Isolation
- Continuous Short Circuit Protection

The P1 Series of miniature DC/DC converters offers a 3500 Vdc isolated high voltage output directly proportional to input voltage. They are available in alternate industry standard pinouts. All models will tolerate a short circuit indefinitely.

ELECTRICAL SPECIFICATIONS

Voltage Accuracy	+/-3%
Line Regulation	Proportional
Load Regulation	+/- 10%
Output Ripple	< 1% P-P
Startup Voltage	< 0.7Vdc
Input Filter	Low ESR Capacitor
Efficiency	> 54%
Short Circuit Protection	Continuous
Switching Frequency	60 kHz
Output Isolation	3500 Vdc
Input / Output Capacitance	< 30pF

GENERAL SPECIFICATIONS

Temp. Stability	+/-0.02%/°C
Temp. (Operating , Case)	-25 to +85°C
Temp. (Storage)	-40 to +100°C
Humidity	0 to 95% (Non-Condensing)
EMI/RFI	Shielded Version Available *(Suffix /S)*
Derating	None
Cooling	Free-Air Convection

PHYSICAL SPECIFICATIONS

Dimensions	1.5 x 1.5 x 0.63 inches
Weight	1.5 Oz
Case Material	Black Phenolic

P1 SERIES 1 WATT PROPORTIONAL HV DC/DC CONVERTERS

SINGLE OUTPUTS

REPRESENTATIVE MODEL LISTING							
MODEL NUMBER		INPUT SPECIFICATIONS			OUTPUT SPECIFICATIONS		
Non-RoHs	RoHs	VOLTAGE	NO LOAD	FULL LOAD	VOLTAGE	RIPPLE	CURRENT
P1-10	P1-10/Y	0V - 12Vdc	<45 mA	<150 mA	0V- 100Vdc	<0.5% (0.5V p-p)	10 mA
P1-20	P1-20/Y	0V - 12Vdc	<45 mA	<150 mA	0V- 200Vdc	<0.5% (1V p-p)	5 mA
P1-30	P1-30/Y	0V - 12Vdc	<45mA	<125 mA	0V - 300Vdc	<0.5% (1.5V p-p)	3 mA
P1-40	P1-40/Y	0V - 12Vdc	<45 mA	<125 mA	0V- 400Vdc	<0.5% (2V p-p)	2.5 mA
P1-50	P1-50/Y	0V - 12Vdc	<15 mA	<125 mA	0V - 500Vdc	<0.5% (2.5V p-p)	2 mA
P1-60	P1-60/Y	0V - 12Vdc	<15 mA	<125 mA	0V- 600Vdc	<0.5% (3V p-p)	1.7 mA
P1-80	P1-80/Y	0V - 12Vdc	<25 mA	<125 mA	0V- 800Vdc	<0.5% (4V p-p)	1.3 mA
P1-100	P1-100/Y	0V - 12Vdc	<15 mA	<125 mA	0V- 1kVdc	<0.5% (5V p-p)	1.0 mA
P1-120	P1-120/Y	0V - 12Vdc	<15 mA	<125 mA	0V- 1.2kVdc	<0.5% (6V p-p)	0.84 mA
P1-125	P1-125/Y	0V - 12Vdc	<20 mA	<125 mA	0V- 1.25kVdc	<0.5% (6.25V p-p)	0.8 mA
P1-150	P1-150/Y	0V - 12Vdc	<20 mA	<125 mA	0V - 1.5kVdc	<0.5% (7.5V p-p)	0.66 mA
P1-160	P1-160/Y	0V - 12Vdc	<30 mA	<130 mA	0V- 1.6kVdc	<0.5% (8V p-p)	0.63 mA
P1-180	P1-180/Y	0V - 12Vdc	<30 mA	<130 mA	0V- 1.8kVdc	<0.5% (9V p-p)	0.56 mA
P1-200	P1-200/Y	0V - 12Vdc	<30 mA	<130 mA	0V- 2kVdc	<0.5% (10V p-p)	0.5 mA
P1-220	P1-220/Y	0V - 12Vdc	<30 mA	<130 mA	0V- 2.2kVdc	<0.5% (11V p-p)	0.45 mA
P1-240	P1-240/Y	0V - 12Vdc	<30 mA	<130 mA	0V- 2.4kVdc	<0.5% (12V p-p)	0.42 mA
P1-250	P1-250/Y	0V - 12Vdc	<30 mA	<130 mA	0V - 2.5kVdc	<0.5% (12.5V p-p)	0.4 mA
P1-260	P1-260/Y	0V - 12Vdc	<40 mA	<130 mA	0V - 2.6kVdc	<0.5% (13V p-p)	0.38 mA
P1-280	P1-280/Y	0V - 12Vdc	<40 mA	<130 mA	0V- 2.8kVdc	<0.5% (14V p-p)	0.36 mA
P1-300	P1-300/Y	0V - 12Vdc	<40 mA	<130 mA	0V - 3kVdc	<0.5% (15V p-p)	0.34 mA
P1-400	P1-400/Y	0V - 12Vdc	<50 mA	<130 mA	0V - 4kVdc	<0.75% (30V p-p)	0.25 mA
*P1-500/C	*P1-500/C/Y	0V - 12Vdc	<70 mA	<150 mA	0V - 5kVdc	<1% (50V p-p)	0.2 mA
*P1-600/C	*P1-600/C/Y	0V - 12Vdc	<85 mA	<175 mA	0V- 6kVdc	<1% (60V p-p)	0.166 mA

** For output voltages over 4kVdc /C pinout is required*

P1 SERIES 1 WATT PROPORTIONAL HV DC/DC CONVERTERS

DUAL OUTPUTS

REPRESENTATIVE MODEL LISTING							
MODEL NUMBER		INPUT SPECIFICATIONS			OUTPUT SPECIFICATIONS		
Non-RoHs	RoHs	VOLTAGE	NO LOAD	FULL LOAD	VOLTAGE	RIPPLE	CURRENT
P1-D5/B	P1-D5/B/Y	0V - 12Vdc	<45 mA	<150 mA	0V - +/-50Vdc	<0.5% (0.25V p-p)	10 mA
P1-D10/B	P1-D10/B/Y	0V - 12Vdc	<45 mA	<150 mA	0V - +/-100Vdc	<0.5% (0.5V p-p)	5 mA
P1-D15/B	P1-D15/B/Y	0V - 12Vdc	<45 mA	<125 mA	0V - +/-150Vdc	<0.5% (0.75V p-p)	3 mA
P1-D20/B	P1-D20/B/Y	0V - 12Vdc	<45 mA	<125 mA	0V - +/-200Vdc	<0.5% (1V p-p)	2.5 mA
P1-D25/B	P1-D25/B/Y	0V - 12Vdc	<15 mA	<125 mA	0V - +/-250Vdc	<0.5% (1.25V p-p)	2 mA
P1-D30/B	P1-D30/B/Y	0V - 12Vdc	<15 mA	<125mA	0V - +/-300Vdc	<0.5% (1.5V p-p)	1.7 mA
P1-D50/B	P1-D50/B/Y	0V - 12Vdc	<15 mA	<125 mA	0V - +/-500Vdc	<0.5% (2.5V p-p)	1 mA
P1-D60/B	P1-D60/B/Y	0V - 12Vdc	<15 mA	<125 mA	0V - +/-600Vdc	<0.5% (3V p-p)	0.84 mA
P1-D75/B	P1-D75/B/Y	0V - 12Vdc	<20 mA	<125 mA	0V - +/-750Vdc	<0.5% (3.7V p-p)	0.66 mA
P1-D100/B	P1-D100/B/Y	0V - 12Vdc	<30 mA	<130 mA	0V - +/-1kVdc	<0.5% (5V p-p)	0.5 mA
P1-D125/B	P1-D125/B/Y	0V - 12Vdc	<30 mA	<130 mA	0V - +/-1.25kVdc	<0.5% (6.25V p-p)	0.4 mA
P1-D150/B	P1-D150/B/Y	0V - 12Vdc	<40 mA	<130 mA	0V - +/-1.5kVdc	<0.5% (7.5V p-p)	0.34 mA
P1-D200/B	P1-D200/B/Y	0V - 12Vdc	<50 mA	<130 mA	0V - +/-2kVdc	<0.75% (15V p-p)	0.25 mA
*P1-D250/C	*P1-D250/C/Y	0V - 12Vdc	<70 mA	<150 mA	0V - +/-2.5kVdc	<1% (25V p-p)	0.2 mA
*P1-D300/C	*P1-D300/C/Y	0V - 12Vdc	<85 mA	<175 mA	0V - +/-3kVdc	<1% (30V p-p)	0.166 mA

** For output voltages over +/-2kVdc*
/C pinout is required

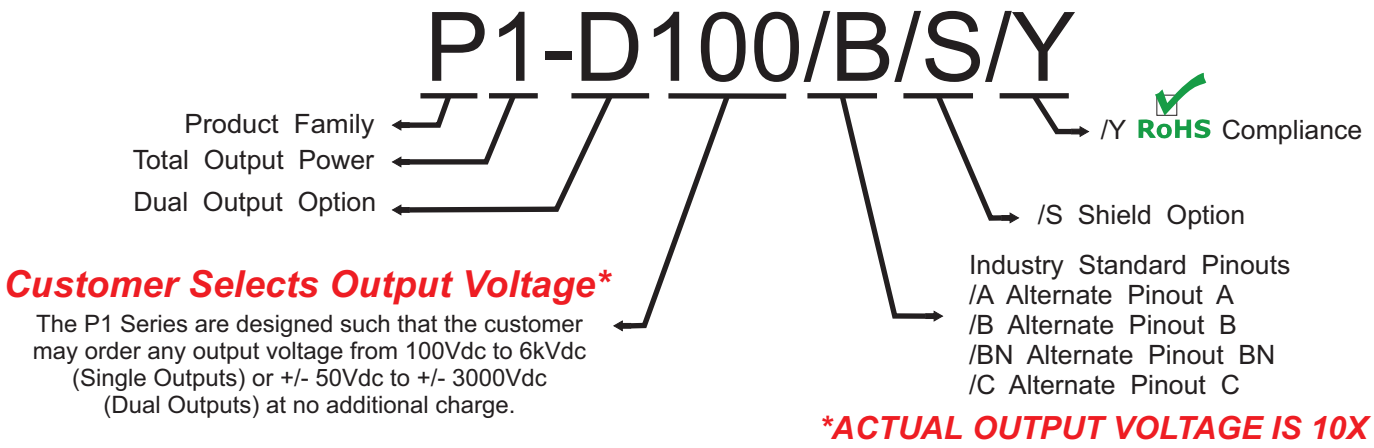

P1 SERIES 1 WATT PROPORTIONAL HV DC/DC CONVERTERS

STANDARD & ALTERNATE (/A)

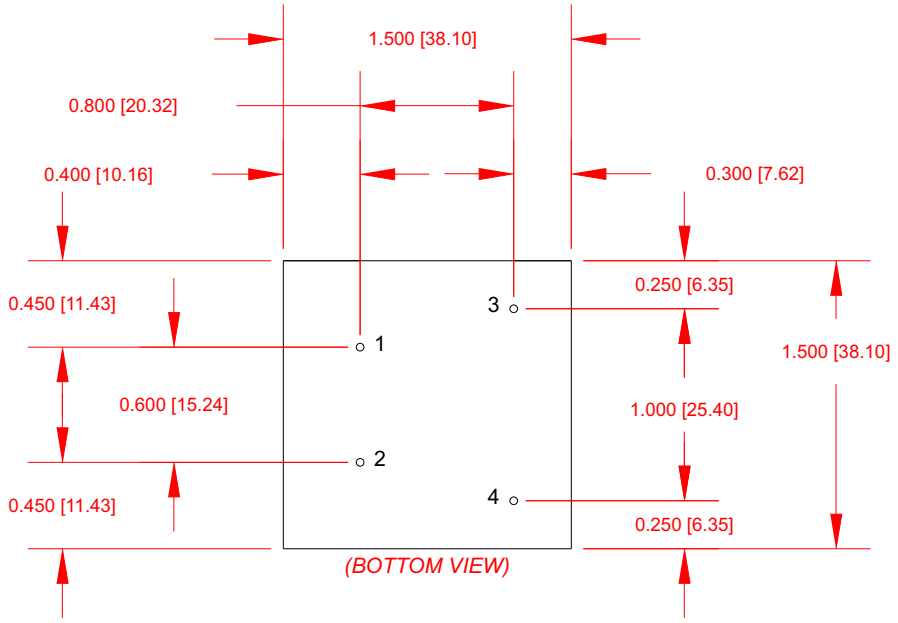

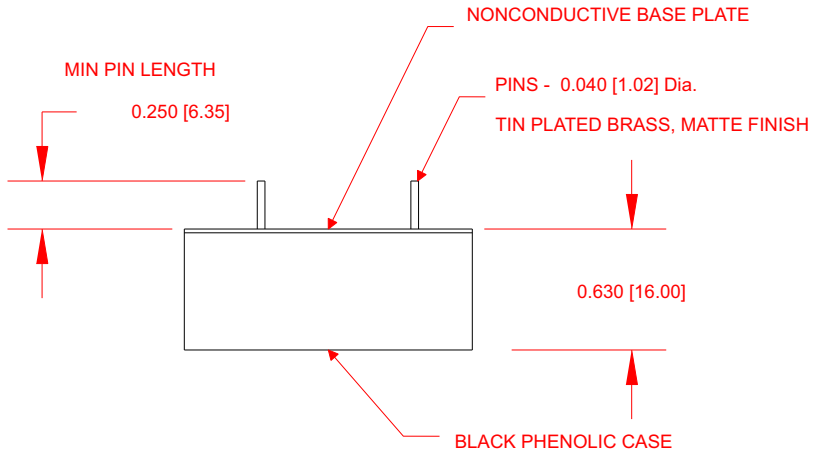

PIN #	STANDARD	ALTERNATE (/A)
1	+ Input	+ Input
2	- Input	- Input
3	- Output	+Output
4	+ Output	- Output

Dimensions are in Inches
[Metric equivalents in brackets]

P1 SERIES 1 WATT PROPORTIONAL HV DC/DC CONVERTERS

ALTERNATE (/B) & ALTERNATE (/BN)

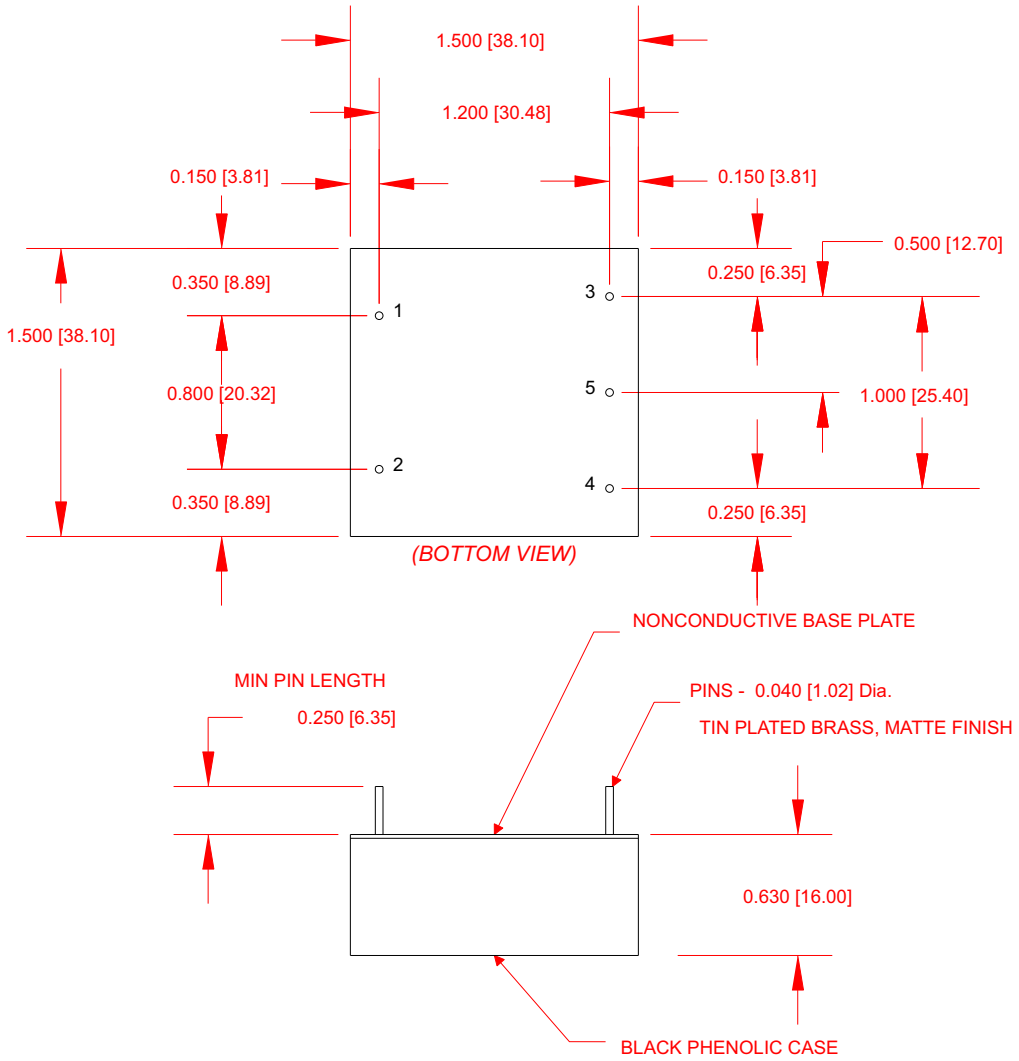

PIN #	ALTERNATE (/B) PINOUT		ALTERNATE (/BN) PINOUT	
	SINGLE	DUAL	SINGLE	DUAL
1	+ Input	+ Input	+ Input	+ Input
2	- Input	- Input	- Input	- Input
3	+ Output	+ Output	- Output	- Output
4	- Output	- Output	+ Output	+ Output
5	No Pin	Com	No Pin	Com

Dimensions are in Inches
[Metric equivalents in brackets]

P1 SERIES 1 WATT PROPORTIONAL HV DC/DC CONVERTERS

ALTERNATE (/C)

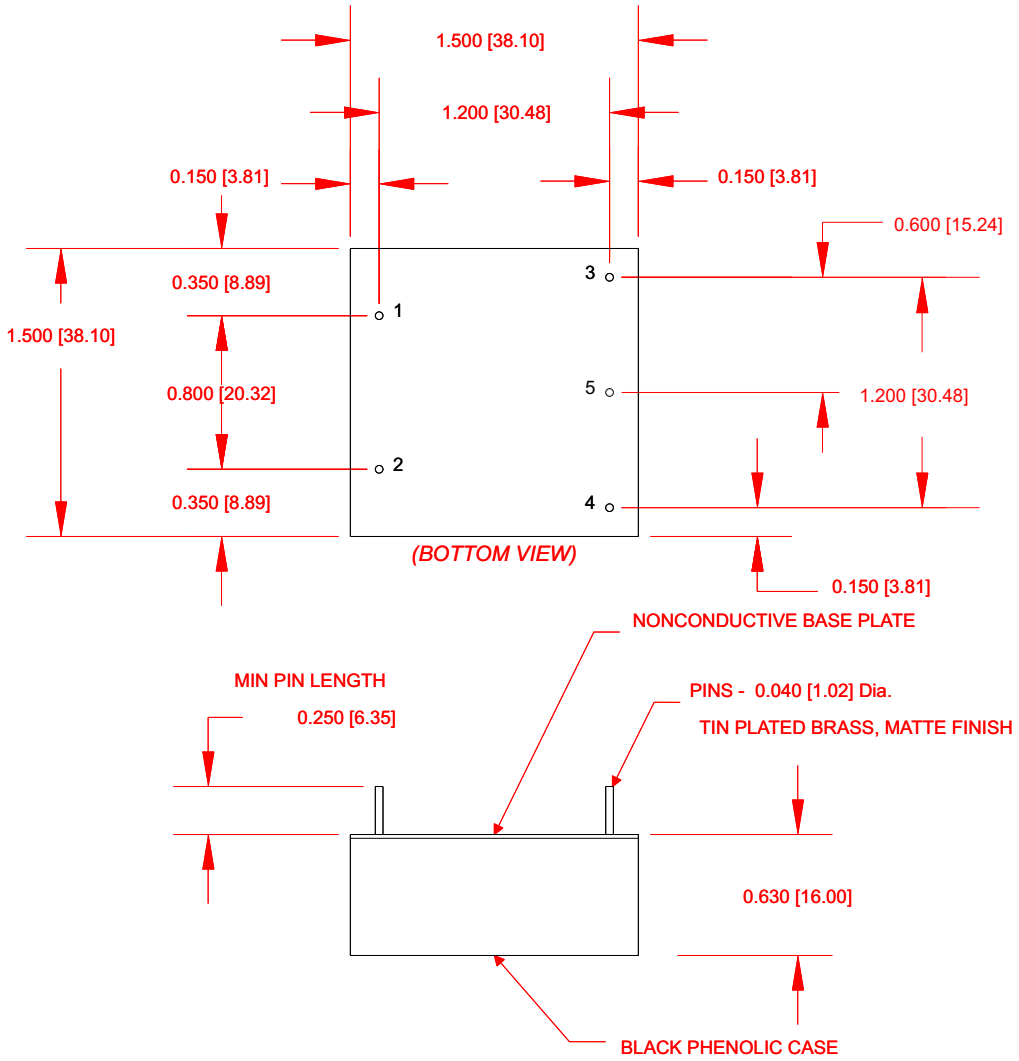

PIN #	SINGLE OUTPUT	DUAL OUTPUT
1	+ Input	+ Input
2	- Input	- Input
3	+ Output	+ Output
4	- Output	- Output
5	No Pin	Com

Dimensions are in Inches
[Metric equivalents in brackets]

P1 SERIES 1 WATT PROPORTIONAL HV DC/DC CONVERTERS

SHIELD OPTION (/S)

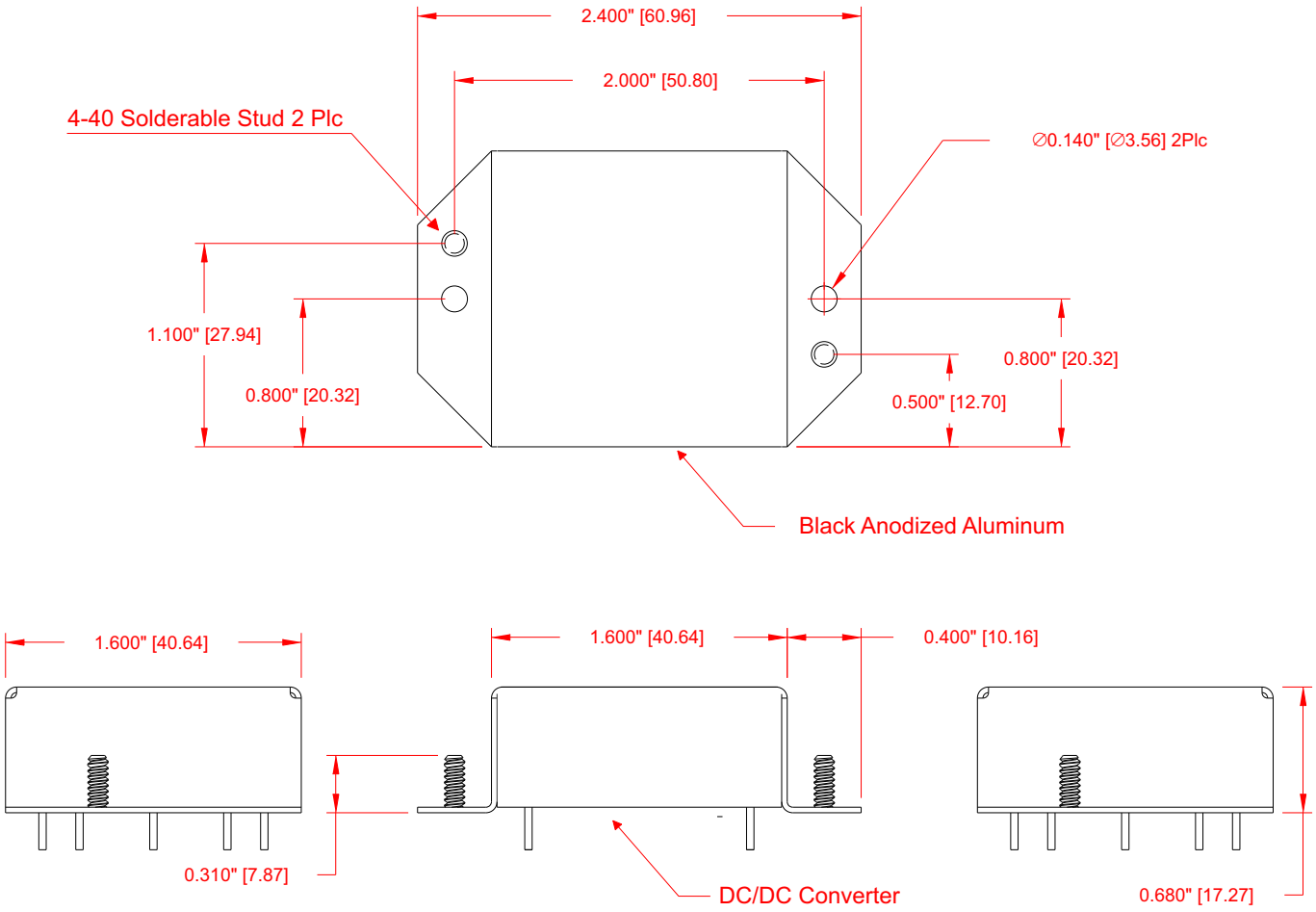

P1 SERIES 1 WATT PROPORTIONAL HV DC/DC CONVERTERS

APPLICATION NOTES

INPUT AND OUTPUT IMPEDANCE

The P1 Series of power converters have been designed to be stable with no external capacitors when used in low inductance input and output circuits. However, in some applications, the inductance associated with the distribution from the power source to the input of the converter can affect the stability of the converter. The addition of a 100 µF electrolytic capacitor with an ESR <1 Ohm across the input helps ensure stability of the converter. In many applications, the user has to use decoupling capacitance at the load.

SHORT CIRCUIT PROTECTION

The P1 Series is equipped with short circuit protection. The converter will fold-back the input power whenever a short circuit is applied to its output and automatically recover after the overload condition is removed.

ISOLATION

The output of the P1 Series is galvanically isolated from the input, capacitance is < 30pF and resistance is > 10G Ohm. For dual output units (/B or /C option) Isolation is from Com output pin (5) and -Input (2).

RIPPLE AND NOISE

Figure below shows a typical output voltage ripple waveform, measured at full rated load current with no additional output filtering. External low ESR capacitors may be added across output to further reduce ripple.

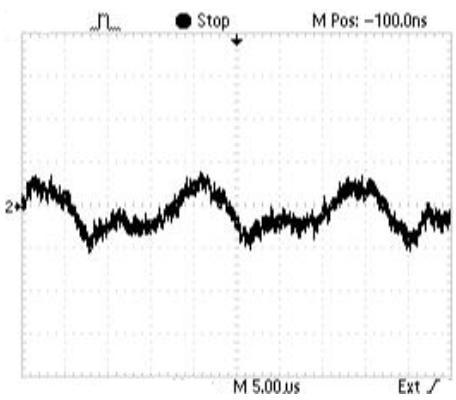

INPUT CURRENT

The P1 Series unique sinusoidal push pull design allows the converter to maintain a high efficiency throughout a vast portion of its power range.

Figure below show a typical plot of the typical input current as a function of output power.

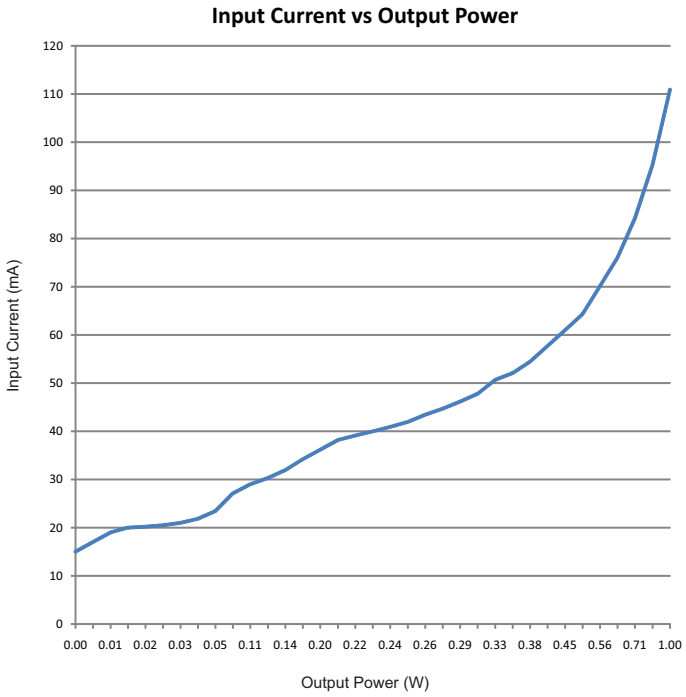

Operating Conditions:

Max Input Voltage = Fixed
Output Load = Resistive

INRUSH CURRENT

The inrush current of the P1 Series has been kept as low as possible. However, a series resistor may be inserted in the input line to limit this current further.

P1 SERIES 1 WATT PROPORTIONAL HV DC/DC CONVERTERS

APPLICATION NOTES

LOAD TRANSIENT

Figure below shows a typical output voltage response, measured during a transition from full rated load current to no load current with no additional output filtering.

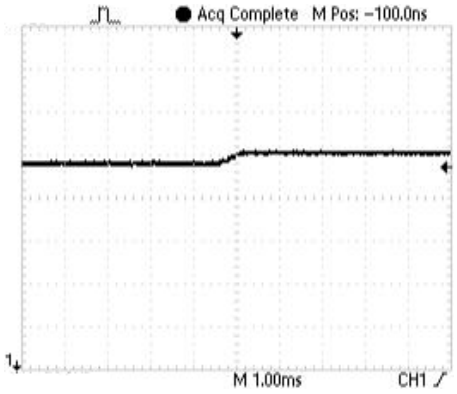

STARTUP TRANSIENT

Figure below shows a typical output voltage during turn-on, measured at no load current with no additional output filtering.

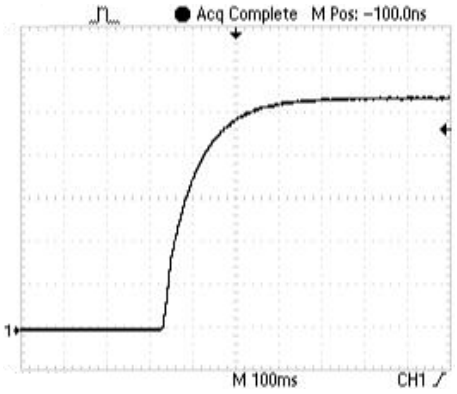

Figure below shows a typical output voltage response, measured during a transition from no load current to full rated load current with no additional output filtering.

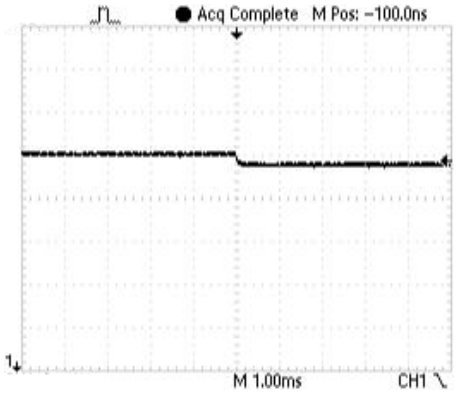

Figure below shows a typical output voltage during turn-on, measured at full rated load current with no additional output filtering.

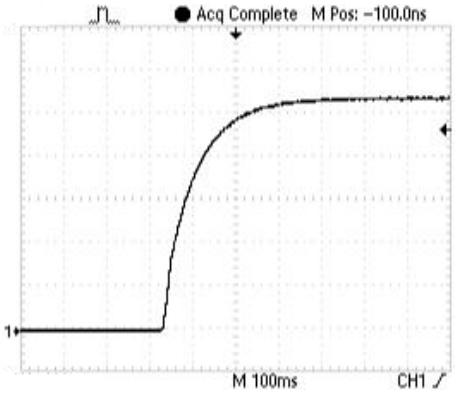

P1 SERIES 1 WATT PROPORTIONAL HV DC/DC CONVERTERS

CONNECTION IN PARALLEL

The figures below shows how to connect outputs of several units with equal nominal output voltage in parallel with the use of oring diodes.

POSITIVE OUTPUT

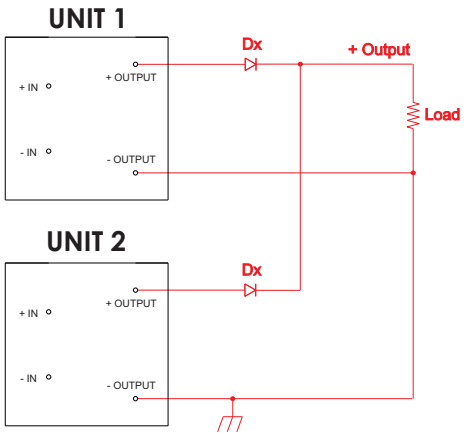

NEGATIVE OUTPUT

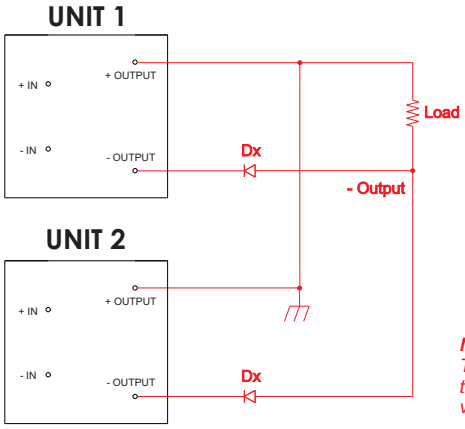

NOTE:
The ratings of Dx should be 1.5 times the maximum current and voltage expected in each branch.

CONNECTION IN SERIES

Figures below shows how to connect multiple outputs in series with the use of shunt diodes, taking into consideration that the highest achieved output voltage should remain below the rated isolation voltage.

POSITIVE OUTPUT

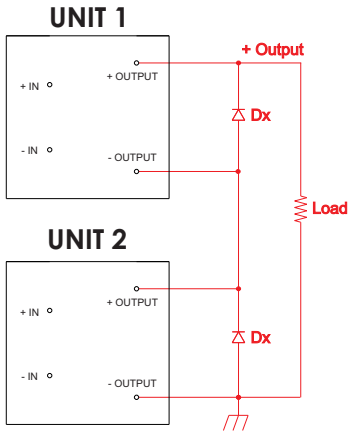

NEGATIVE OUTPUT

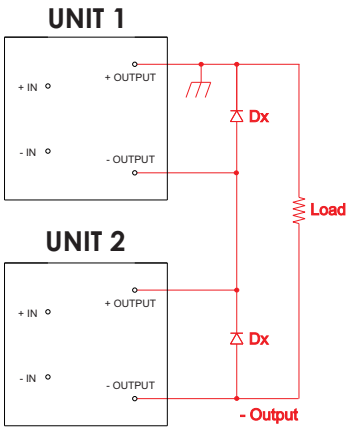

DUAL OUTPUT

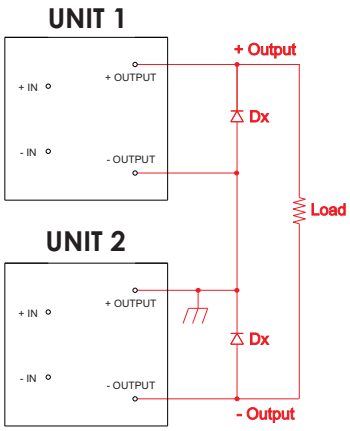

NOTE:
The ratings of Dx should be 1.5 times the maximum current and voltage expected in each branch.

P1 SERIES 1 WATT PROPORTIONAL HV DC/DC CONVERTERS

APPLICATION NOTES

POSITIVE OR NEGATIVE OUTPUTS

Isolated DC-DC voltage converters can provide positive or negative voltages from a single device.

Isolated DC-DC converters may also be used with either a positive or a negative input voltage source, as long as the relative polarity of the input to the device is maintained.

The figures below show the various polarity combinations and how to connect the converter to provide them relative to ground.

POSITIVE SOURCE WITH A POSITIVE OUTPUT

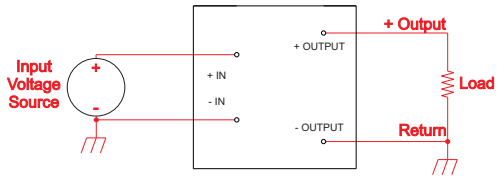

POSITIVE SOURCE WITH A NEGATIVE OUTPUT

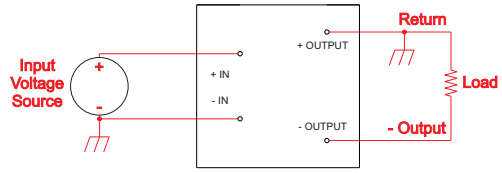

NEGATIVE SOURCE WITH A POSITIVE OUTPUT

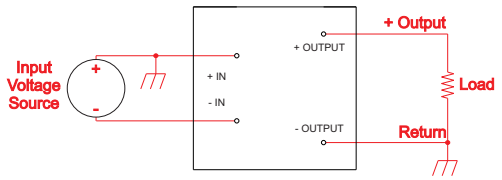

NEGATIVE SOURCE WITH A NEGATIVE OUTPUT

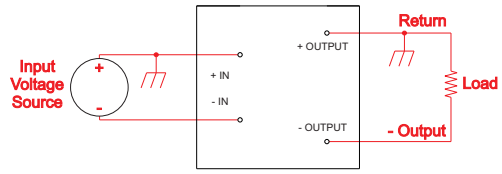

CONNECTIONS FOR DUAL OUTPUTS

Isolation on a dual output converter is from Com output pin (5) and -Input (2) and therefore ground connection on the output is to Com pin only.

The figures below shows how to power a dual output converter with either a positive or a negative input voltage source.

POSITIVE VOLTAGE SOURCE

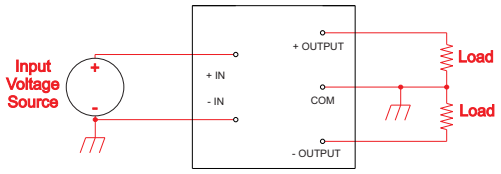

NEGATIVE VOLTAGE SOURCE

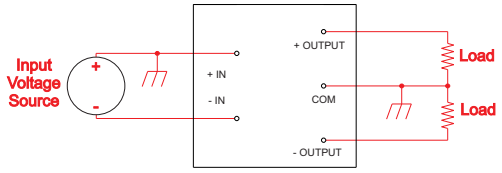

NOTE:
The (- In) must be kept negative with respect to the (+In) pin. If this polarity is reversed, permanent damage to the converter may occur.

P1 SERIES 1 WATT PROPORTIONAL HV DC/DC CONVERTERS

APPLICATION NOTES

CLEANING AGENTS

In order to avoid possible damage, any penetration of cleaning fluids must be prevented, since the power supplies are not hermetically sealed.

NUCLEAR AND MEDICAL APPLICATIONS

American Power Design products are not designed, intended for use in, or authorized for use as critical components in life support systems, equipment used in hazardous environments, or nuclear control systems without the express written consent of American Power Design, Inc.

TECHNICAL REVISIONS

The appearance of products, including safety agency certifications pictured on labels, may change depending on the date manufactured. Specifications are subject to change without notice.

SAFETY REQUIREMENTS

The converters are designed to meet North American and International safety regulatory requirements per UL 60950-1/CSA 22.2 No. 60950-1-07 Second Edition, IEC 60950-1: 2005, and EN 60950-1:2006. Basic Insulation is provided between input and output. To comply with safety agencies requirements, an input line fuse must be used external to the converter. The table below provides the recommended fuse rating for use with this family of products.

Input Voltage Range	Fuse Rating
0-12Vdc	0.5A

If one input fuse is used for a group of modules, the maximum fuse rating should not exceed 10A.

WARRANTY

All products manufactured by American Power Design, Inc. (APD) are warranted to be free of defects due to material or workmanship for a period of one year from date of shipment. At our option, APD will repair or replace any non-conforming product.
APD expressly disclaims any liability for consequential or incidental damages resulting from the use or misuse of its products by the purchaser or others.
This warranty is in lieu of all warranties expressed or implied, including the warranties of merchantability. No other warranties, obligations, or liabilities are expressed or implied.
All products being returned for repair require a return material authorization(RMA) assigned by APD prior to return shipment.

American Power Design, Inc.

"The best high voltage design solution"

RoHS

P2 SERIES 2 WATT PROPORTIONAL HV DC/DC CONVERTERS

FEATURES

- Customer Selects Output Voltage
- Single Outputs to + or - 6000 Vdc
- Dual Outputs to +/- 3000 Vdc
- High Reliability
- Industry Standard Pinouts
- Wide Temperature Range (-25 to +85°C)
- 60 kHz Switching Frequency
- 3500 Vdc Output Isolation
- Continuous Short Circuit Protection

The P2 Series of miniature DC/DC converters offers a 3500 Vdc isolated high voltage output directly proportional to input voltage. They are available in alternate industry standard pinouts. All models will tolerate a short circuit indefinitely.

ELECTRICAL SPECIFICATIONS

Voltage Accuracy	+/- 3%
Line Regulation	Proportional
Load Regulation	+/- 5% (No Load to Full Load)
Output Ripple	< 2% P-P
Startup Voltage	< 0.7Vdc
Input Filter	Low ESR Capacitor
Efficiency	65% (typ.)
Short Circuit Protection	Continuous
Switching Frequency	60 kHz
Output Isolation	3500 Vdc
Input / Output Capacitance	< 30pF

GENERAL SPECIFICATIONS

Temp. Stability	+/-0.02%/°C
Temp. (Operating , Case)	-25 to +85°C
Temp. (Storage)	-40 to +100°C
Humidity	0 to 95% (Non-Condensing)
EMI/RFI	Shielded Version Available *(Suffix /S)*
Derating	None
Cooling	Free-Air Convection

PHYSICAL SPECIFICATIONS

Dimensions	1.5 x 1.5 x 0.63 inches
Weight	1.5 Oz
Case Material	Black Phenolic

P2 SERIES 2 WATT PROPORTIONAL HV DC/DC CONVERTERS

SINGLE OUTPUTS

REPRESENTATIVE MODEL LISTING							
MODEL NUMBER		INPUT SPECIFICATIONS			OUTPUT SPECIFICATIONS		
Non-RoHs	RoHs	VOLTAGE	NO LOAD	FULL LOAD	VOLTAGE	RIPPLE	CURRENT
P2-10	P2-10/Y	0V - 12Vdc	<90 mA	<240 mA	0V- 100Vdc	<0.5% (0.5V p-p)	20 mA
P2-20	P2-20/Y	0V - 12Vdc	<90 mA	<240 mA	0V- 200Vdc	<0.3% (0.5V p-p)	10 mA
P2-30	P2-30/Y	0V - 12Vdc	<90mA	<240 mA	0V - 300Vdc	<0.2% (0.5V p-p)	6.6 mA
P2-40	P2-40/Y	0V - 12Vdc	<90 mA	<250 mA	0V- 400Vdc	<0.2% (0.5V p-p)	5.0 mA
P2-50	P2-50/Y	0V - 12Vdc	<90 mA	<250 mA	0V - 500Vdc	<0.1% (0.5V p-p)	4.0 mA
P2-60	P2-60/Y	0V - 12Vdc	<90 mA	<250 mA	0V- 600Vdc	<0.1% (0.6V p-p)	3.3 mA
P2-80	P2-80/Y	0V - 12Vdc	<100 mA	<250 mA	0V- 800Vdc	<0.1% (0.8V p-p)	2.5 mA
P2-100	P2-100/Y	0V - 12Vdc	<120 mA	<250 mA	0V- 1kVdc	<0.1% (1V p-p)	2.0 mA
P2-120	P2-120/Y	0V - 12Vdc	<120 mA	<260 mA	0V- 1.2kVdc	<0.1% (1.2V p-p)	1.6 mA
P2-140	P2-140/Y	0V - 12Vdc	<120 mA	<260 mA	0V- 1.4kVdc	<0.5% (6.5V p-p)	1.4 mA
P2-150	P2-150/Y	0V - 12Vdc	<120 mA	<260 mA	0V - 1.5kVdc	<0.5% (7.5V p-p)	1.3 mA
P2-160	P2-160/Y	0V - 12Vdc	<120 mA	<260 mA	0V- 1.6kVdc	<0.5% (7V p-p)	1.2 mA
P2-180	P2-180/Y	0V - 12Vdc	<120 mA	<260 mA	0V- 1.8kVdc	<0.5% (8V p-p)	1.1 mA
P2-200	P2-200/Y	0V - 12Vdc	<120 mA	<260 mA	0V- 2kVdc	<0.5% (9V p-p)	1.0 mA
P2-220	P2-220/Y	0V - 12Vdc	<120 mA	<260 mA	0V- 2.2kVdc	<0.5% (10V p-p)	0.90 mA
P2-240	P2-240/Y	0V - 12Vdc	<120 mA	<260 mA	0V- 2.4kVdc	<0.5% (11V p-p)	0.83 mA
P2-250	P2-250/Y	0V - 12Vdc	<120 mA	<270 mA	0V - 2.5kVdc	<0.5% (12V p-p)	0.80 mA
P2-260	P2-260/Y	0V - 12Vdc	<120 mA	<275 mA	0V - 2.6kVdc	<0.5% (12V p-p)	0.77 mA
P2-280	P2-280/Y	0V - 12Vdc	<120 mA	<280 mA	0V- 2.8kVdc	<0.5% (13V p-p)	0.71 mA
P2-300	P2-300/Y	0V - 12Vdc	<120 mA	<290 mA	0V - 3kVdc	<0.5% (14V p-p)	0.66 mA
P2-400	P2-400/Y	0V - 12Vdc	<120 mA	<305 mA	0V - 4kVdc	<1% (40V p-p)	0.50 mA
*P2-500/C	*P2-500/C/Y	0V - 12Vdc	<120 mA	<325 mA	0V - 5kVdc	<2% (100V p-p)	0.40 mA
*P2-600/C	*P2-600/C/Y	0V - 12Vdc	<120 mA	<325 mA	0V- 6kVdc	<2% (120V p-p)	0.33 mA

** For output voltages over 4kVdc /C pinout is required*

P2 SERIES 2 WATT PROPORTIONAL HV DC/DC CONVERTERS

DUAL OUTPUTS

REPRESENTATIVE MODEL LISTING							
MODEL NUMBER		INPUT SPECIFICATIONS			OUTPUT SPECIFICATIONS		
Non-RoHs	RoHs	VOLTAGE	NO LOAD	FULL LOAD	VOLTAGE	RIPPLE	CURRENT
P2-D5/B	P2-D5/B/Y	0V - 12Vdc	<90 mA	<240 mA	0V - +/-50Vdc	<0.5% (0.25V p-p)	20 mA
P2-D10/B	P2-D10/B/Y	0V - 12Vdc	<90 mA	<240 mA	0V - +/-100Vdc	<0.3% (0.25V p-p)	10 mA
P2-D15/B	P2-D15/B/Y	0V - 12Vdc	<90 mA	<240 mA	0V - +/-150Vdc	<0.2% (0.25V p-p)	6.6 mA
P2-D20/B	P2-D20/B/Y	0V - 12Vdc	<90 mA	<250 mA	0V - +/-200Vdc	<0.2% (0.25V p-p)	5.0 mA
P2-D25/B	P2-D25/B/Y	0V - 12Vdc	<90 mA	<250 mA	0V - +/-250Vdc	<0.1% (0.25V p-p)	4.0 mA
P2-D30/B	P2-D30/B/Y	0V - 12Vdc	<90 mA	<250mA	0V - +/-300Vdc	<0.1% (0.3V p-p)	3.3 mA
P2-D50/B	P2-D50/B/Y	0V - 12Vdc	<120 mA	<250 mA	0V - +/-500Vdc	<0.1% (0.5V p-p)	2.0 mA
P2-D60/B	P2-D60/B/Y	0V - 12Vdc	<120 mA	<260 mA	0V - +/-600Vdc	<0.1% (0.6V p-p)	1.6 mA
P2-D75/B	P2-D75/B/Y	0V - 12Vdc	<120 mA	<260 mA	0V - +/-750Vdc	<0.5% (3.8V p-p)	1.3 mA
P2-D100/B	P2-D100/B/Y	0V - 12Vdc	<120 mA	<260 mA	0V - +/-1kVdc	<0.5% (4.5V p-p)	1.0 mA
P2-D125/B	P2-D125/B/Y	0V - 12Vdc	<120 mA	<270 mA	0V - +/-1.25kVdc	<0.5% (6V p-p)	0.80 mA
P2-D150/B	P2-D150/B/Y	0V - 12Vdc	<120 mA	<290 mA	0V - +/-1.5kVdc	<0.5% (7V p-p)	0.66 mA
P2-D200/B	P2-D200/B/Y	0V - 12Vdc	<120 mA	<305 mA	0V - +/-2kVdc	<1% (20V p-p)	0.50 mA
*P2-D250/C	*P2-D250/C/Y	0V - 12Vdc	<120 mA	<325 mA	0V - +/-2.5kVdc	<2% (50V p-p)	0.40 mA
*P2-D300/C	*P2-D300/C/Y	0V - 12Vdc	<120 mA	<325 mA	0V - +/-3kVdc	<2% (60V p-p)	0.33 mA

** For output voltages over +/-2kVdc /C pinout is required*

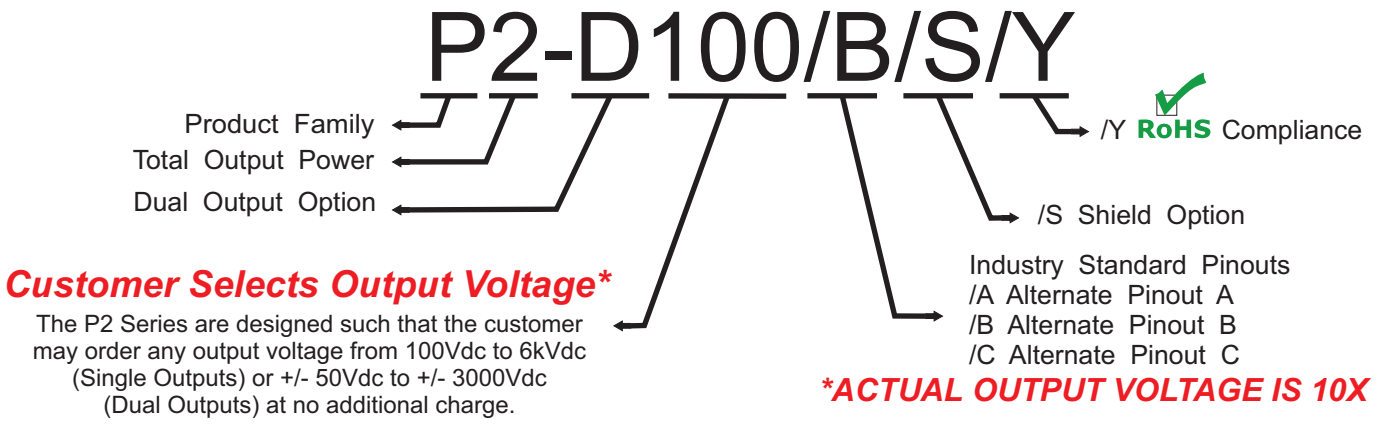

P2 SERIES 2 WATT PROPORTIONAL HV DC/DC CONVERTERS

STANDARD & ALTERNATE (/A)

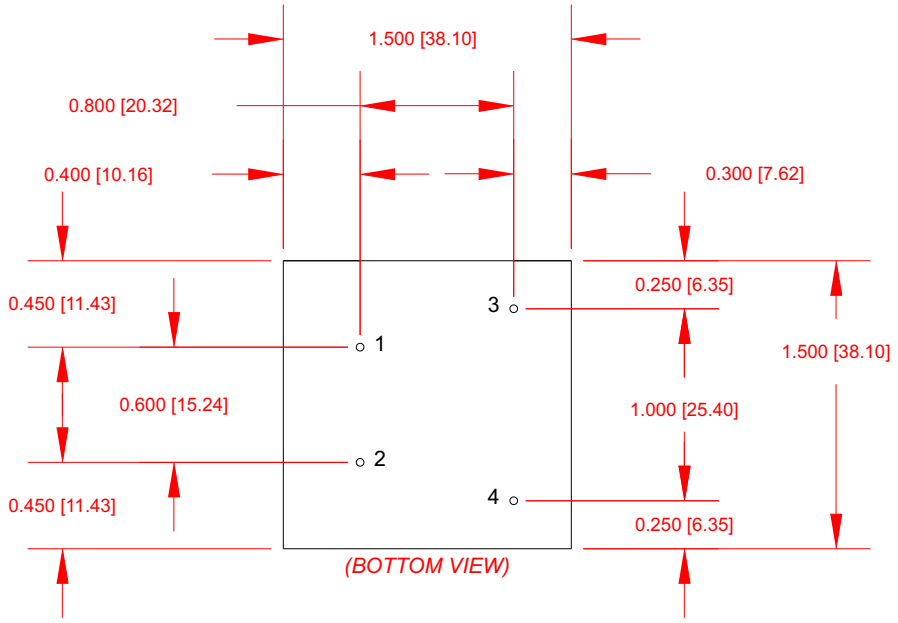

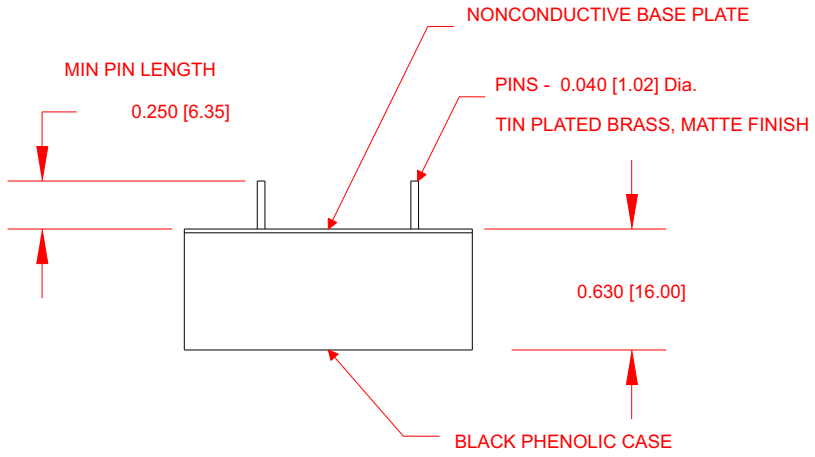

PIN #	STANDARD	ALTERNATE (/A)
1	+ Input	+ Input
2	- Input	- Input
3	- Output	+Output
4	+ Output	- Output

Dimensions are in Inches
[Metric equivalents in brackets]

P2 SERIES 2 WATT PROPORTIONAL HV DC/DC CONVERTERS

ALTERNATE (/B)

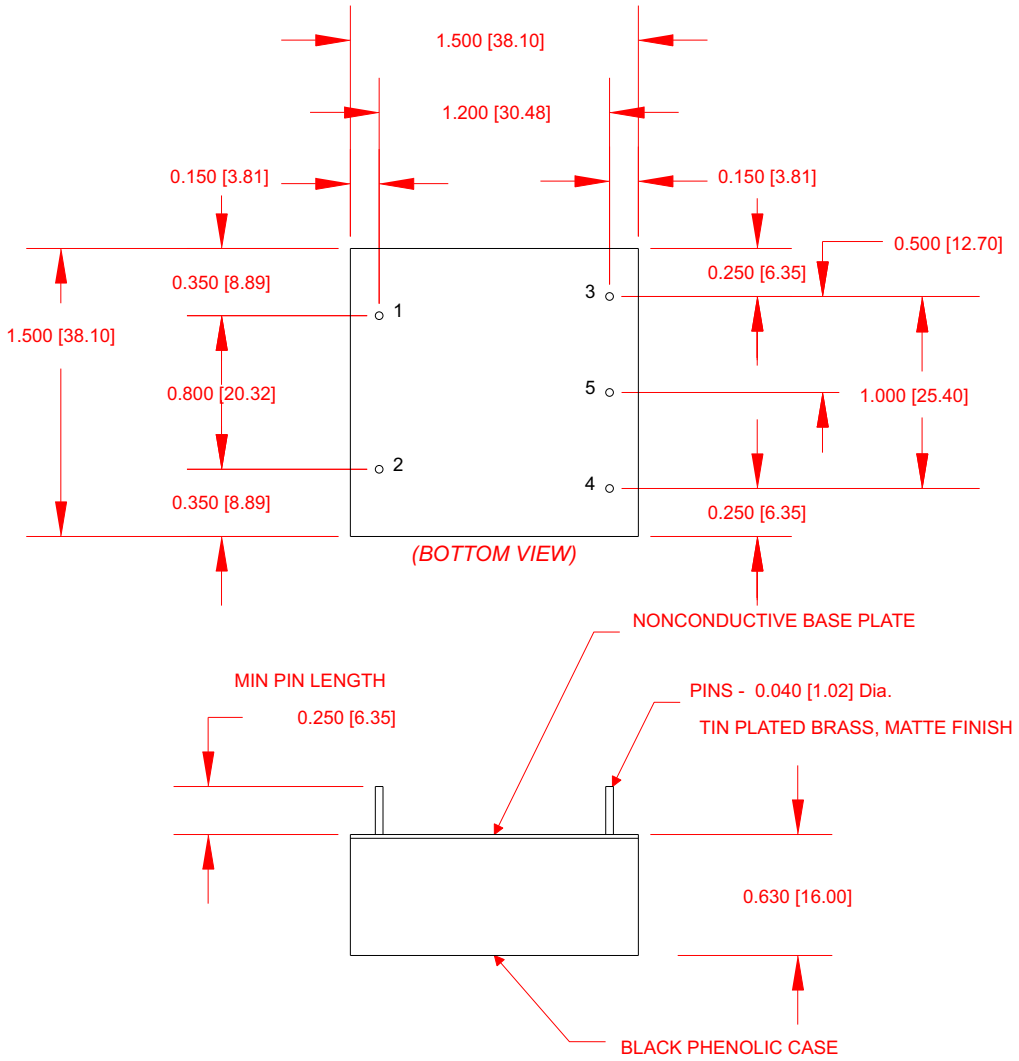

PIN #	SINGLE OUTPUT	DUAL OUTPUT
1	+ Input	+ Input
2	- Input	- Input
3	+ Output	+ Output
4	- Output	- Output
5	No Pin	Com

Dimensions are in Inches
[Metric equivalents in brackets]

P2 SERIES 2 WATT PROPORTIONAL HV DC/DC CONVERTERS

ALTERNATE (/C)

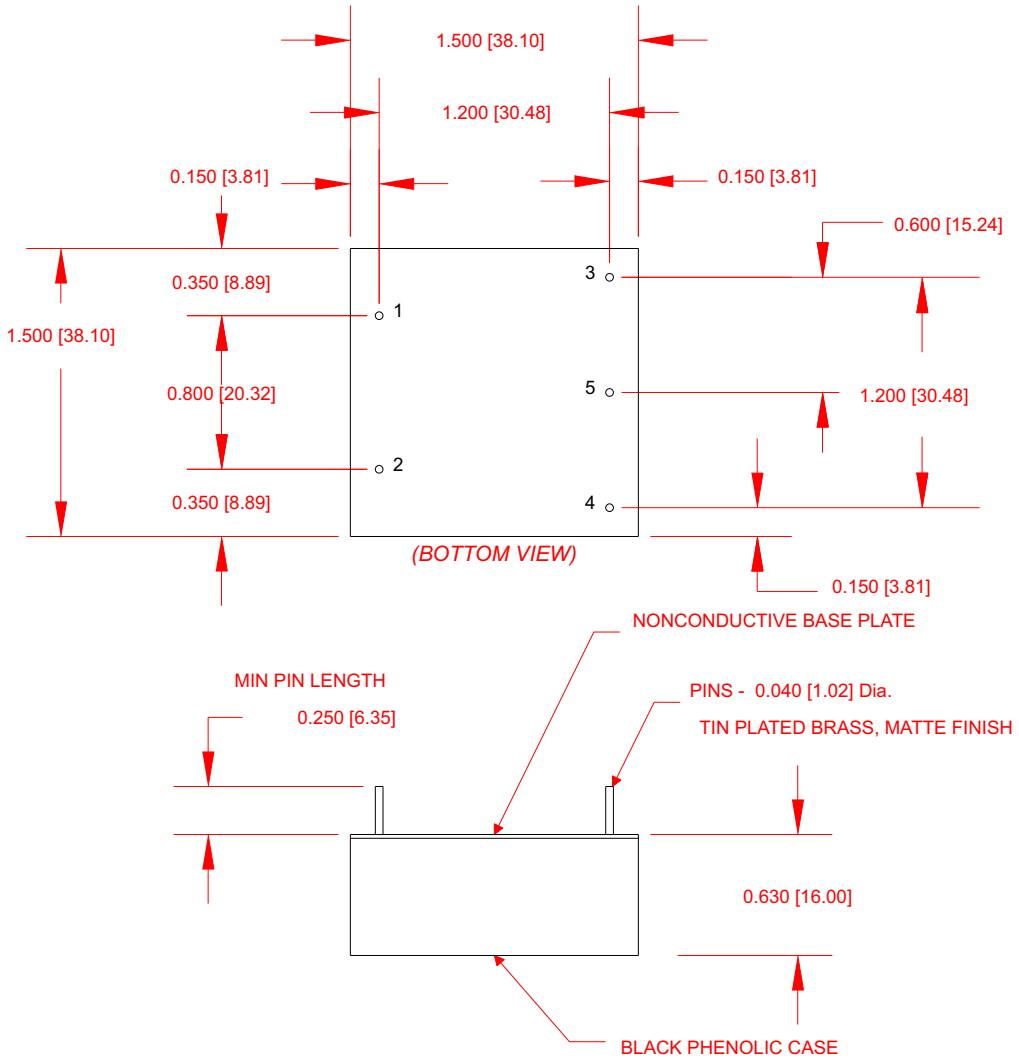

PIN #	SINGLE OUTPUT	DUAL OUTPUT
1	+ Input	+ Input
2	- Input	- Input
3	+ Output	+ Output
4	- Output	- Output
5	No Pin	Com

Dimensions are in Inches
[Metric equivalents in brackets]

P2 SERIES 2 WATT PROPORTIONAL HV DC/DC CONVERTERS

SHIELD OPTION (/S)

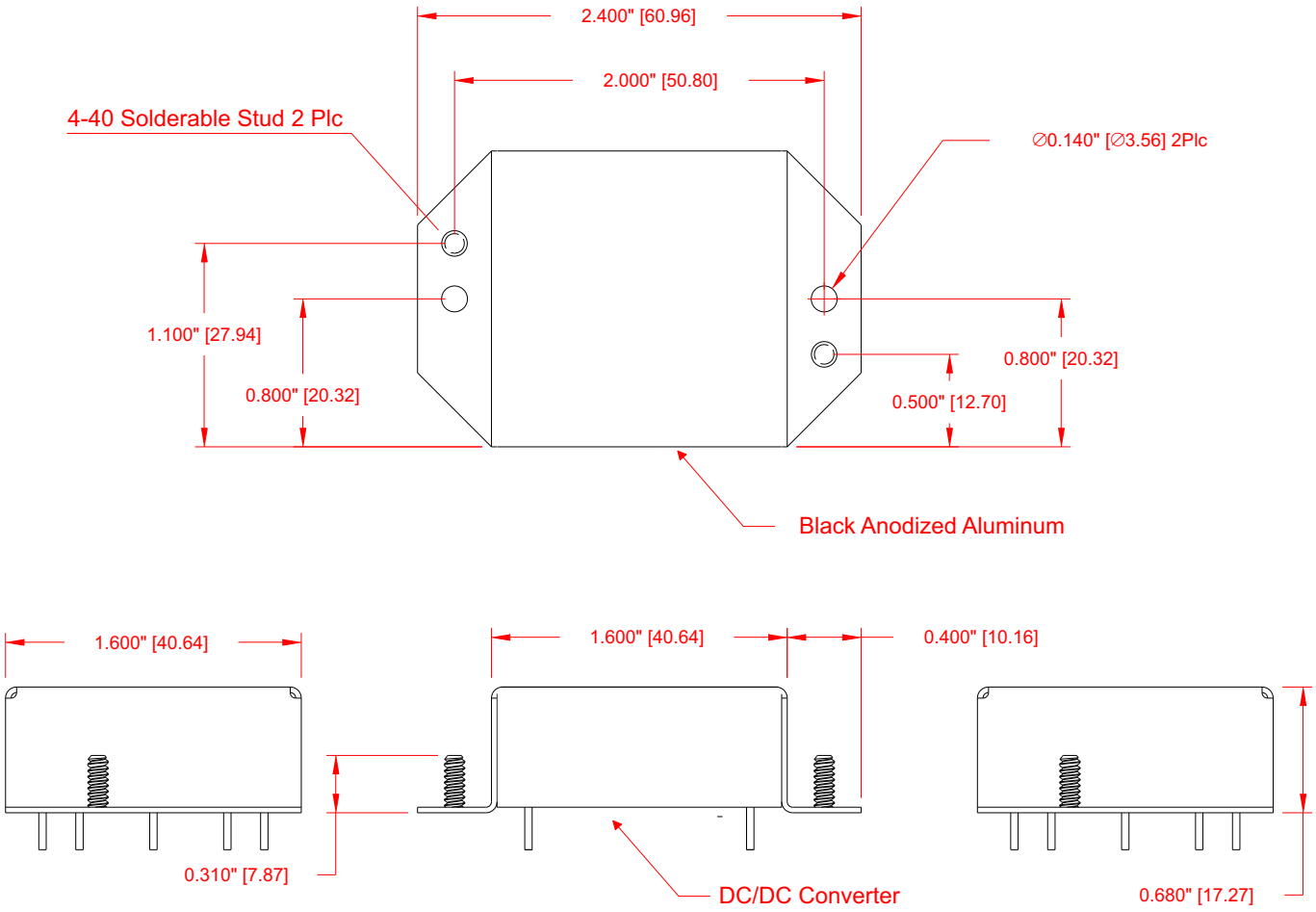

P2 SERIES 2 WATT PROPORTIONAL HV DC/DC CONVERTERS

APPLICATION NOTES

INPUT AND OUTPUT IMPEDANCE

The P2 Series of power converters have been designed to be stable with no external capacitors when used in low inductance input and output circuits. However, in some applications, the inductance associated with the distribution from the power source to the input of the converter can affect the stability of the converter. The addition of a 100 µF electrolytic capacitor with an ESR <1 Ohm across the input helps ensure stability of the converter. In some applications, the user may need to use decoupling capacitance at the load.

SHORT CIRCUIT PROTECTION

The P2 Series is equipped with short circuit protection. The converter will fold-back the input power whenever a short circuit is applied to its output and automatically recover after the overload condition is removed.

ISOLATION

The output of the P2 Series is galvanically isolated from the input, capacitance is < 30pF and resistance is > 10G Ohm. For dual output units (/B or /C option) Isolation is from Com output pin (5) and -Input (2).

RIPPLE AND NOISE

Figure below shows a typical output voltage ripple waveform, measured at full rated load current with no additional output filtering. External low ESR capacitors may be added across output to further reduce ripple.

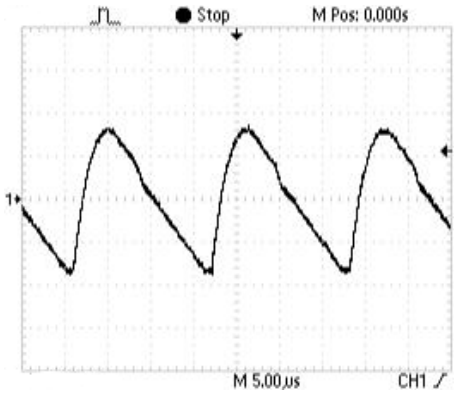

STARTUP TRANSIENT

Figure below shows a typical output voltage during turn-on, measured at no load current with no additional output filtering.

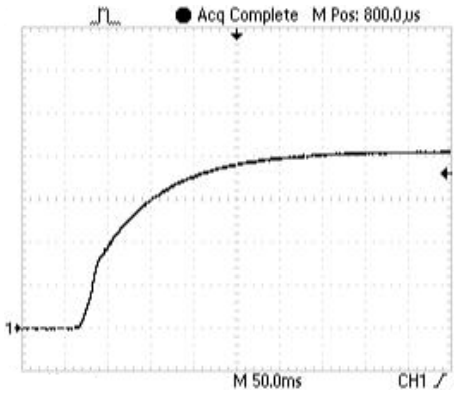

Figure below shows a typical output voltage during turn-on, measured at full rated load current with no additional output filtering.

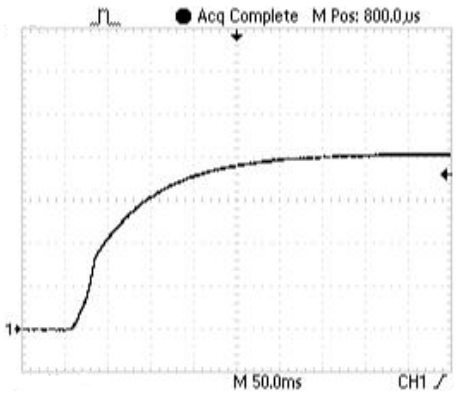

P2 SERIES 2 WATT PROPORTIONAL HV DC/DC CONVERTERS

APPLICATION NOTES

INRUSH CURRENT

The inrush current of the P2 Series has been kept as low as possible. However, a series resistor may be inserted in the input line to limit this current further.

LOAD TRANSIENT

Figure below shows a typical output voltage response, measured during a transition from full rated load current to no load current with no additional output filtering.

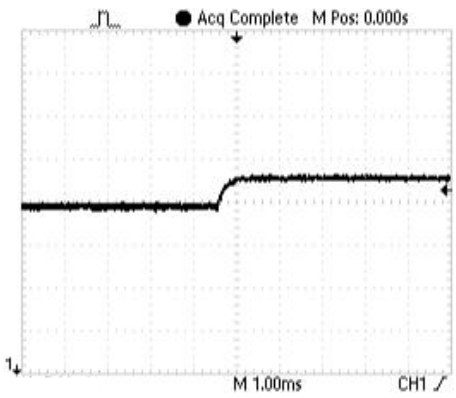

Figure below shows a typical output voltage response, measured during a transition from no load current to full rated load current with no additional output filtering.

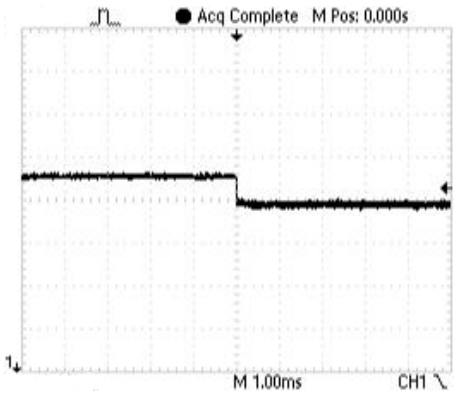

CONNECTION IN PARALLEL

The figures below shows how to connect outputs of several units with equal nominal output voltage in parallel with the use of oring diodes.

POSITIVE OUTPUT

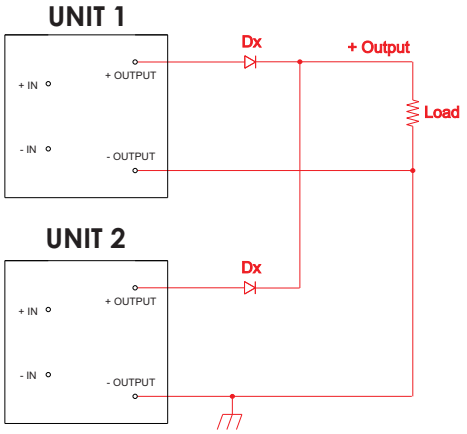

NEGATIVE OUTPUT

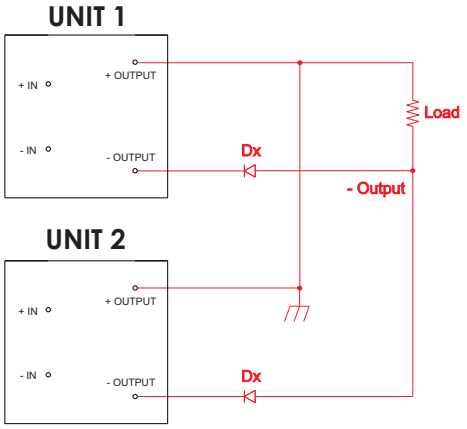

NOTE:
The ratings of Dx should be 1.5 times the maximum current and voltage expected in each branch.

P2 SERIES 2 WATT PROPORTIONAL HV DC/DC CONVERTERS

CONNECTION IN SERIES

Figures below shows how to connect multiple outputs in series with the use of shunt diodes, taking into consideration that the highest achieved output voltage should remain below the rated isolation voltage.

POSITIVE OUTPUT

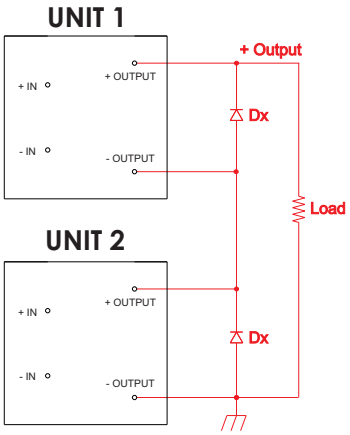

NEGATIVE OUTPUT

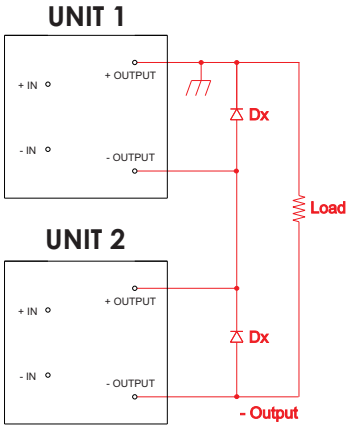

DUAL OUTPUT

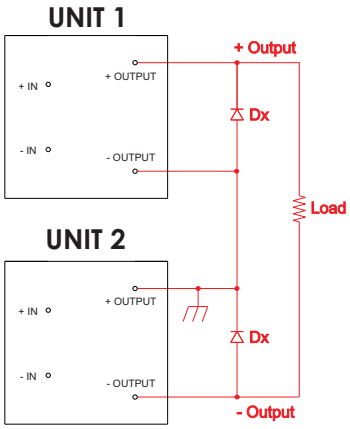

NOTE:
The ratings of Dx should be 1.5 times the maximum current and voltage expected in each branch.

P2 SERIES 2 WATT PROPORTIONAL HV DC/DC CONVERTERS

APPLICATION NOTES

POSITIVE OR NEGATIVE OUTPUTS

Isolated DC-DC voltage converters can provide positive or negative voltages from a single device.

Isolated DC-DC converters may also be used with either a positive or a negative input voltage source, as long as the relative polarity of the input to the device is maintained.

The figures below show the various polarity combinations and how to connect the converter to provide them relative to ground.

POSITIVE SOURCE WITH A POSITIVE OUTPUT

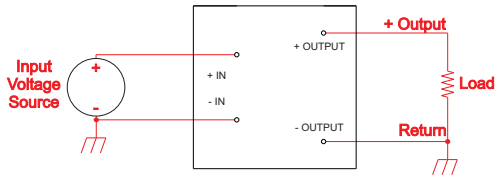

POSITIVE SOURCE WITH A NEGATIVE OUTPUT

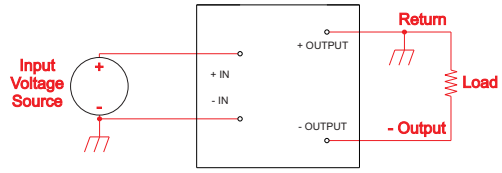

NEGATIVE SOURCE WITH A POSITIVE OUTPUT

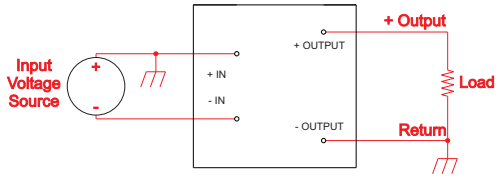

NEGATIVE SOURCE WITH A NEGATIVE OUTPUT

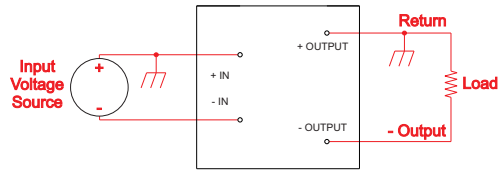

CONNECTIONS FOR DUAL OUTPUTS

Isolation on a dual output converter is from Com output pin (5) and -Input (2) and therefore ground connection on the output is to Com pin only.

The figures below shows how to power a dual output converter with either a positive or a negative input voltage source.

POSITIVE VOLTAGE SOURCE

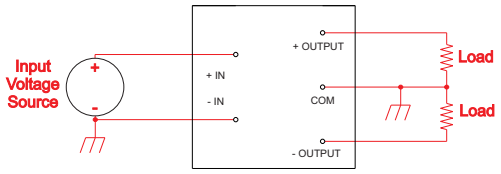

NEGATIVE VOLTAGE SOURCE

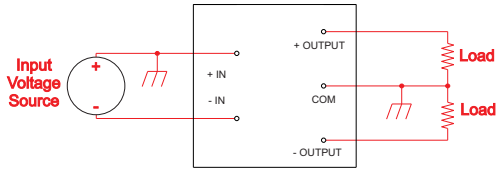

NOTE:
The (- In) must be kept negative with respect to the (+In) pin. If this polarity is reversed, permanent damage to the converter may occur.

P2 SERIES 2 WATT PROPORTIONAL HV DC/DC CONVERTERS

APPLICATION NOTES

CLEANING AGENTS

In order to avoid possible damage, any penetration of cleaning fluids must be prevented, since the power supplies are not hermetically sealed.

NUCLEAR AND MEDICAL APPLICATIONS

American Power Design products are not designed, intended for use in, or authorized for use as critical components in life support systems, equipment used in hazardous environments, or nuclear control systems without the express written consent of American Power Design, Inc.

TECHNICAL REVISIONS

The appearance of products, including safety agency certifications pictured on labels, may change depending on the date manufactured. Specifications are subject to change without notice.

SAFETY REQUIREMENTS

The converters are designed to meet North American and International safety regulatory requirements per UL 60950-1/CSA 22.2 No. 60950-1-07 Second Edition, IEC 60950-1: 2005, and EN 60950-1:2006. Basic Insulation is provided between input and output. To comply with safety agencies requirements, an input line fuse must be used external to the converter. The table below provides the recommended fuse rating for use with this family of products.

Input Voltage Range	Fuse Rating
0-12Vdc	0.5A

If one input fuse is used for a group of modules, the maximum fuse rating should not exceed 10A.

WARRANTY

All products manufactured by American Power Design, Inc. (APD) are warranted to be free of defects due to material or workmanship for a period of one year from date of shipment. At our option, APD will repair or replace any non-conforming product.
APD expressly disclaims any liability for consequential or incidental damages resulting from the use or misuse of its products by the purchaser or others.
This warranty is in lieu of all warranties expressed or implied, including the warranties of merchantability. No other warranties, obligations, or liabilities are expressed or implied.
All products being returned for repair require a return material authorization(RMA) assigned by APD prior to return shipment.

American Power Design, Inc.

"The best high voltage design solution"

RoHS

P3 SERIES 3 WATT PROPORTIONAL HV DC/DC CONVERTERS

FEATURES

- Customer Selects Output Voltage
- Single Outputs to + or - 12000 Vdc
- Dual Outputs to +/- 3000 Vdc
- High Reliability
- Industry Standard Pinouts
- Wide Temperature Range (-20 to +85°C)
- 6500Vdc to 12500 Vdc Output Isolation
- Continuous Short Circuit Protection

The P3 Series of miniature DC/DC converters offers a isolated high voltage output that is directly proportional to input voltage. This series features low ripple and noise and are available in a wide range of alternate industry standard pinouts. All models will tolerate a short circuit indefinitely. They also include a LC input filter to minimize reflected ripple current. Applications include Electrophoresis , Field Generation , Piezo Devices , Mass Spectrometry and Electrostatic Chucks.

ELECTRICAL SPECIFICATIONS

Voltage Accuracy	+/-10%
Line Regulation	Proportional
Load Regulation	+/- 10%
Output Ripple	< 1% P-P
Startup Voltage	< 0.7Vdc
Input Filter	LC Input Filter
Efficiency	70% (typ.)
Short Circuit Protection	Continuous
Switching Frequency	60 kHz
Output Isolation (100V to 6000Vdc Output)	6500 Vdc
Output Isolation (>6000Vdc Output)	12500 Vdc
Input / Output Capacitance	< 30pF

GENERAL SPECIFICATIONS

Temp. Stability	+/-0.02%/°C
Temp. (Operating , Case)	-20 to +85°C
Temp. (Storage)	-55 to +100°C
Humidity	0 to 95% (Non-Condensing)
EMI/RFI	Shielded Version Available *(Suffix /S)*
Derating	None
Cooling	Free-Air Convection

PHYSICAL SPECIFICATIONS

Dimensions	1.5 x 2.4 x 0.81 inches
Weight	3.1 Oz
Case Material	Black Phenolic

P3 SERIES 3 WATT PROPORTIONAL HV DC/DC CONVERTERS

SINGLE OUTPUTS FROM 100V TO 6000 VDC

REPRESENTATIVE MODEL LISTING							
MODEL NUMBER		INPUT SPECIFICATIONS			OUTPUT SPECIFICATIONS		
Non-RoHs	RoHs	VOLTAGE	NO LOAD	FULL LOAD	VOLTAGE	RIPPLE	CURRENT
P3-10	P3-10/Y	0V - 12Vdc	<175 mA	<333 mA	0V- 100Vdc	<0.5% (0.5V p-p)	30 mA
P3-20	P3-20/Y	0V - 12Vdc	<125 mA	<333 mA	0V- 200Vdc	<0.25% (0.5V p-p)	15 mA
P3-25	P3-25/Y	0V - 12Vdc	<125mA	<333 mA	0V - 250Vdc	<0.2% (0.5V p-p)	12 mA
P3-30	P3-30/Y	0V - 12Vdc	<125 mA	<333 mA	0V - 300Vdc	<0.3% (0.9V p-p)	10 mA
P3-50	P3-50/Y	0V - 12Vdc	<125 mA	<333 mA	0V - 500Vdc	<0.02% (0.1V p-p)	6 mA
P3-60	P3-60/Y	0V - 12Vdc	<125 mA	<333 mA	0V- 600Vdc	<0.1% (0.6V p-p)	5 mA
P3-80	P3-80/Y	0V - 12Vdc	<125 mA	<333 mA	0V- 800Vdc	<0.03% (0.24V p-p)	3.75 mA
P3-100	P3-100/Y	0V - 12Vdc	<125 mA	<333 mA	0V- 1kVdc	<0.03% (0.3V p-p)	3 mA
P3-120	P3-120/Y	0V - 12Vdc	<125 mA	<333 mA	0V- 1.2kVdc	<0.02% (0.24V p-p)	2.5 mA
P3-130	P3-130/Y	0V - 12Vdc	<150 mA	<333 mA	0V- 1.3kVdc	<0.2% (2.6V p-p)	2.3 mA
P3-150	P3-150/Y	0V - 12Vdc	<150 mA	<333 mA	0V - 1.5kVdc	<0.05% (0.75 p-p)	2 mA
P3-200	P3-200/Y	0V - 12Vdc	<175 mA	<333 mA	0V- 2kVdc	<0.25% (5V p-p)	1.5 mA
P3-220	P3-220/Y	0V - 12Vdc	<175 mA	<333 mA	0V- 2.2kVdc	<0.25% (5.5V p-p)	1.36 mA
P3-230	P3-230/Y	0V - 12Vdc	<175 mA	<333 mA	0V - 2.3kVdc	<0.25% (5.7V p-p)	1.3 mA
P3-250	P3-250/Y	0V - 12Vdc	<175 mA	<333 mA	0V - 2.5kVdc	<0.25% (6V p-p)	1.2 mA
P3-300	P3-300/Y	0V - 12Vdc	<175 mA	<333 mA	0V - 3kVdc	<0.25% (7V p-p)	1 mA
P3-320	P3-320/Y	0V - 12Vdc	<175 mA	<333 mA	0V - 3.2kVdc	<0.5% (16V p-p)	0.93 mA
P3-330	P3-330/Y	0V - 12Vdc	<175 mA	<333 mA	0V - 3.4kVdc	<0.5% (17V p-p)	0.9 mA
P3-350	P3-350/Y	0V - 12Vdc	<175 mA	<333 mA	0V - 3.5kVdc	<0.5% (17.5V p-p)	0.85 mA
P3-400	P3-400/Y	0V - 12Vdc	<175 mA	<333 mA	0V - 4kVdc	<0.5% (20V p-p)	0.75 mA
P3-500	P3-500/Y	0V - 15Vdc	<175 mA	<390 mA	0V - 5kVdc	<0.5% (25V p-p)	0.6 mA
P3-600	P3-600/Y	0V - 15Vdc	<175 mA	<390 mA	0V- 6kVdc	<0.5% (30V p-p)	0.5 mA

P3 SERIES 3 WATT PROPORTIONAL HV DC/DC CONVERTERS

DUAL OUTPUTS FROM +/- 50V TO +/- 3000VDC

REPRESENTATIVE MODEL LISTING							
MODEL NUMBER		INPUT SPECIFICATIONS			OUTPUT SPECIFICATIONS		
Non-RoHs	RoHs	VOLTAGE	NO LOAD	FULL LOAD	VOLTAGE	RIPPLE	CURRENT
P3-D5	P3-D5/Y	0V - 12Vdc	<175 mA	<333 mA	0V - +/-50Vdc	<0.5% (0.25V p-p)	30 mA
P3-D10	P3-D10/Y	0V - 12Vdc	<125 mA	<333 mA	0V - +/-100Vdc	<0.25% (0.12V p-p)	15 mA
P3-D15	P3-D15/Y	0V - 12Vdc	<125 mA	<333 mA	0V - +/-150Vdc	<0.3% (0.4V p-p)	10 mA
P3-D25	P3-D25/Y	0V - 12Vdc	<150 mA	<333 mA	0V - +/-250Vdc	<0.02% (0.05V p-p)	6 mA
P3-D30	P3-D30/Y	0V - 12Vdc	<175 mA	<333 mA	0V - +/-300Vdc	<0.1% (0.3V p-p)	5 mA
P3-D40	P3-D40/Y	0V - 12Vdc	<125 mA	<333 mA	0V - +/-400Vdc	<0.03% (0.12V p-p)	3.75 mA
P3-D50	P3-D50/Y	0V - 12Vdc	<125 mA	<333 mA	0V - +/-500Vdc	<0.03% (0.15V p-p)	3 mA
P3-D60	P3-D60/Y	0V - 12Vdc	<125 mA	<333 mA	0V - +/-600Vdc	<0.02% (0.12V p-p)	2.5 mA
P3-D75	P3-D75/Y	0V - 12Vdc	<150 mA	<333 mA	0V - +/-750Vdc	<0.05% (0.37V p-p)	2 mA
P3-D100	P3-D100/Y	0V - 12Vdc	<175 mA	<333 mA	0V - +/-1kVdc	<0.25% (2.5V p-p)	1.5 mA
P3-D150	P3-D150/Y	0V - 12Vdc	<175 mA	<333 mA	0V - +/-1.5kVdc	<0.25% (3.5V p-p)	1 mA
P3-D200	P3-D200/Y	0V - 12Vdc	<175 mA	<333 mA	0V - +/-2kVdc	<0.5% (10V p-p)	0.75 mA
P3-D250	P3-D250/Y	0V - 15Vdc	<175 mA	<390 mA	0V - +/-2.5kVdc	<0.5% (12.5V p-p)	0.6 mA
P3-D300	P3-D300/Y	0V - 15Vdc	<175 mA	<390 mA	0V - +/-3kVdc	<0.5% (15V p-p)	0.5 mA

P3 SERIES 3 WATT PROPORTIONAL HV DC/DC CONVERTERS

STANDARD & ALTERNATE (/A)

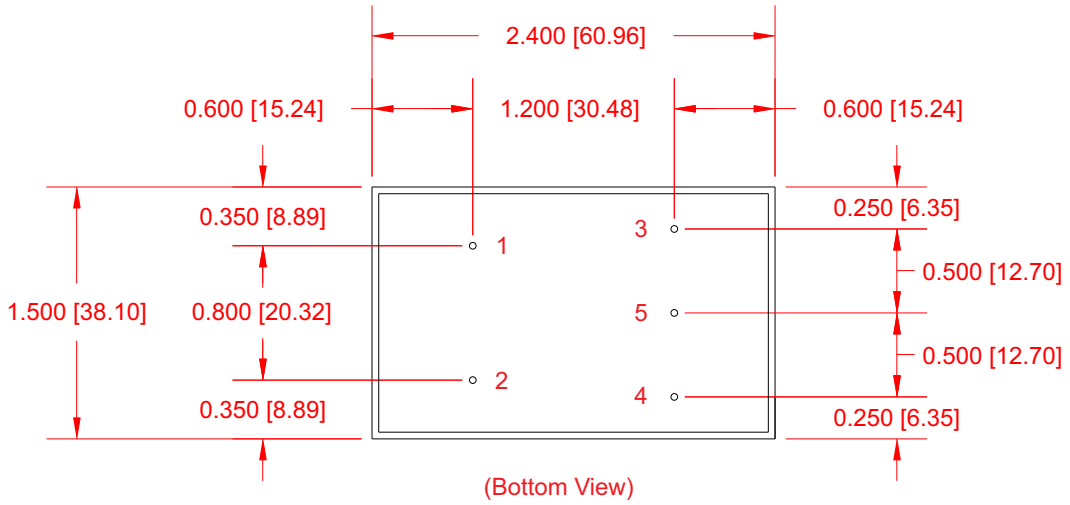

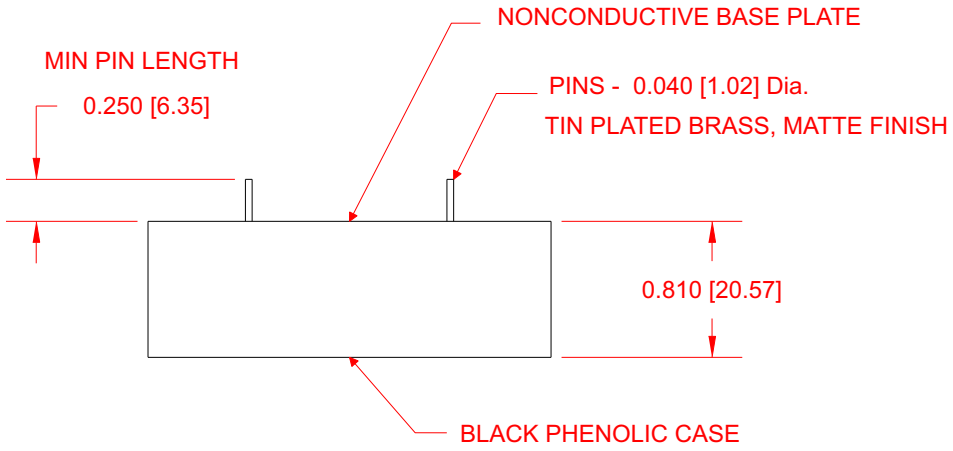

PIN #	STANDARD		ALTERNATE (/A)	
	Single	Dual	Single	Dual
1	+ Input	+ Input	+ Input	+ Input
2	- Input	- Input	- Input	- Input
3	- Output	- Output	+Output	+ Output
4	+ Output	+ Output	- Output	- Output
5	No Pin	Com	No Pin	Com

Dimensions are in Inches
[Metric equivalents in brackets]

P3 SERIES 3 WATT PROPORTIONAL HV DC/DC CONVERTERS

ALTERNATE PINOUT (/D)

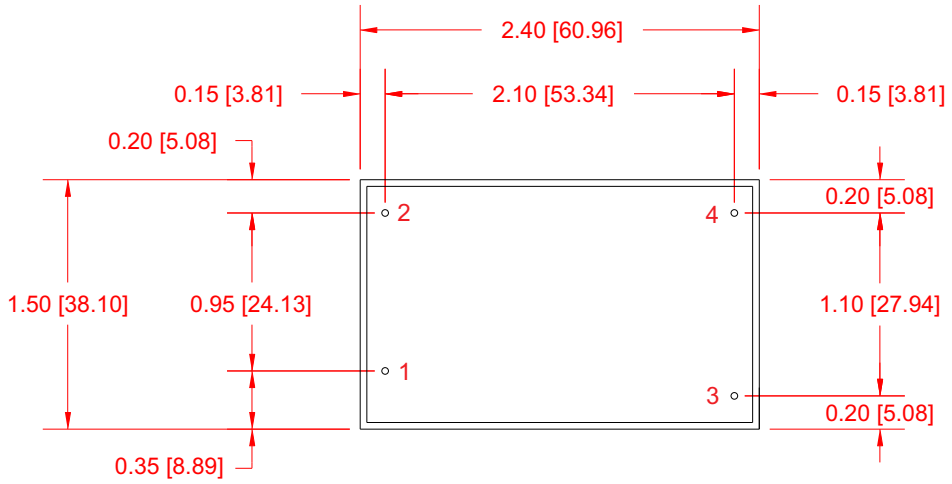

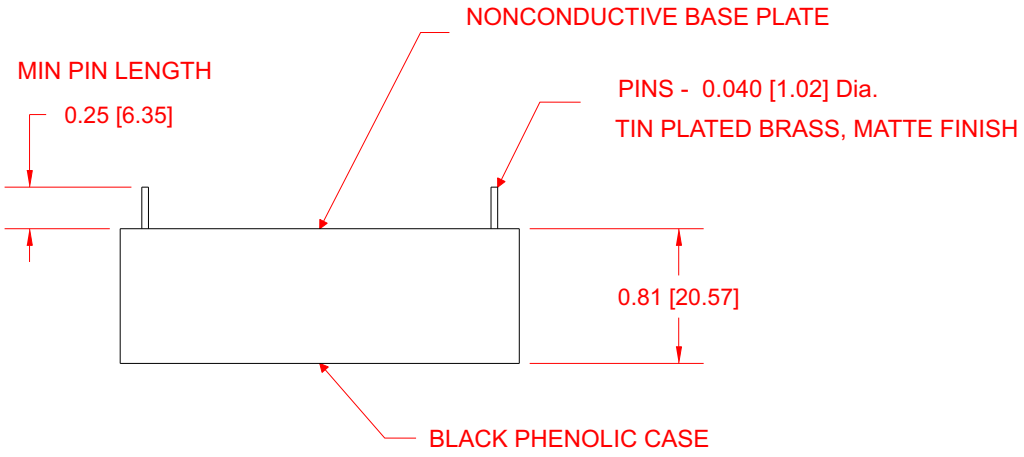

PIN#	FUNCTION
1	+ Input
2	- Input
3	+ Output
4	- Output

Dimensions are in Inches
[Metric equivalents in brackets]

P3 SERIES 3 WATT PROPORTIONAL HV DC/DC CONVERTERS

SINGLE OUTPUTS FROM 7000V TO 12000VDC

REPRESENTATIVE MODEL LISTING							
MODEL NUMBER		INPUT SPECIFICATIONS			OUTPUT SPECIFICATIONS		
Non-RoHs	RoHs	VOLTAGE	NO LOAD	FULL LOAD	VOLTAGE	RIPPLE	CURRENT
P3-700	P3-700/Y	0V - 15Vdc	<175 mA	<350 mA	0V - 7000Vdc	<1% (70V p-p)	0.43 mA
P3-800	P3-800/Y	0V - 15Vdc	<175 mA	<300 mA	0V - 8000Vdc	<1.25% (100V p-p)	0.25 mA
P3-900	P3-900/Y	0V - 15Vdc	<175 mA	<300 mA	0V - 9000Vdc	<1.25% (112V p-p)	0.22 mA
P3-1000	P3-1000/Y	0V - 15Vdc	<175 mA	<300 mA	0V - 10000Vdc	<1.5% (150V p-p)	0.20 mA
P3-1200	P3-1200/Y	0V - 15Vdc	<175 mA	<300 mA	0V - 12000Vdc	<1.5% (180V p-p)	0.16 mA

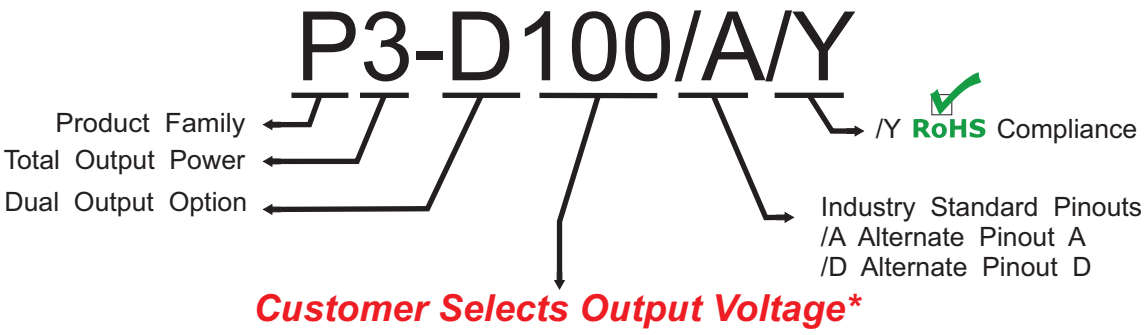

Customer Selects Output Voltage*

The P3 Series are designed such that the customer may order any output voltage within the specified range at no additional charge.

100Vdc to 12kVdc (Single Outputs)
or
+/- 50Vdc to +/- 3000Vdc (Dual Outputs)

****ACTUAL OUTPUT VOLTAGE IS 10X***

P3 SERIES 3 WATT PROPORTIONAL HV DC/DC CONVERTERS

SINGLE OUTPUTS FROM 7000V TO 12000VDC

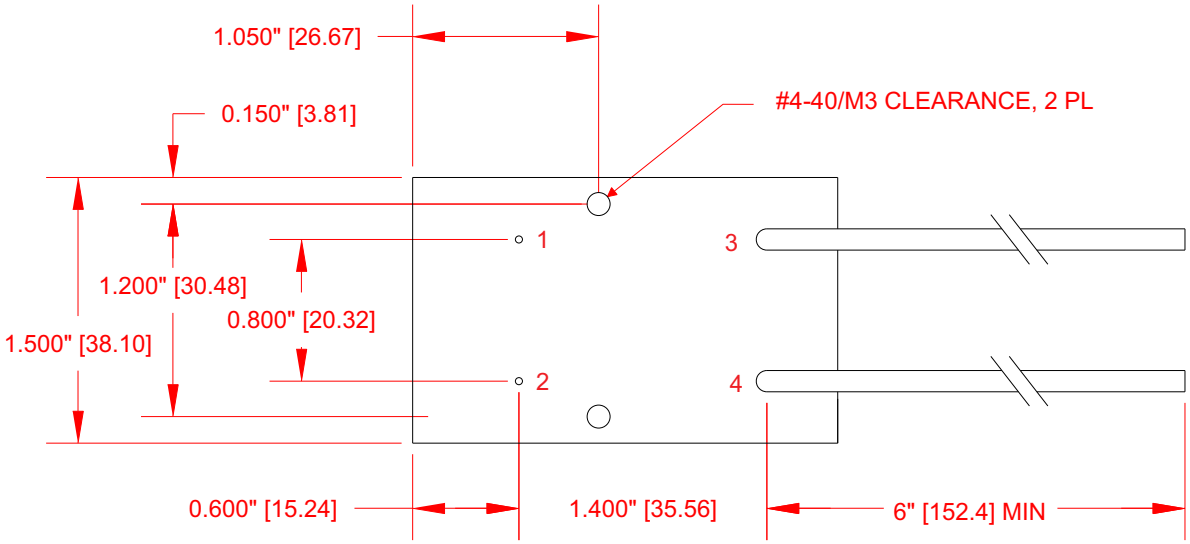

(Bottom View)

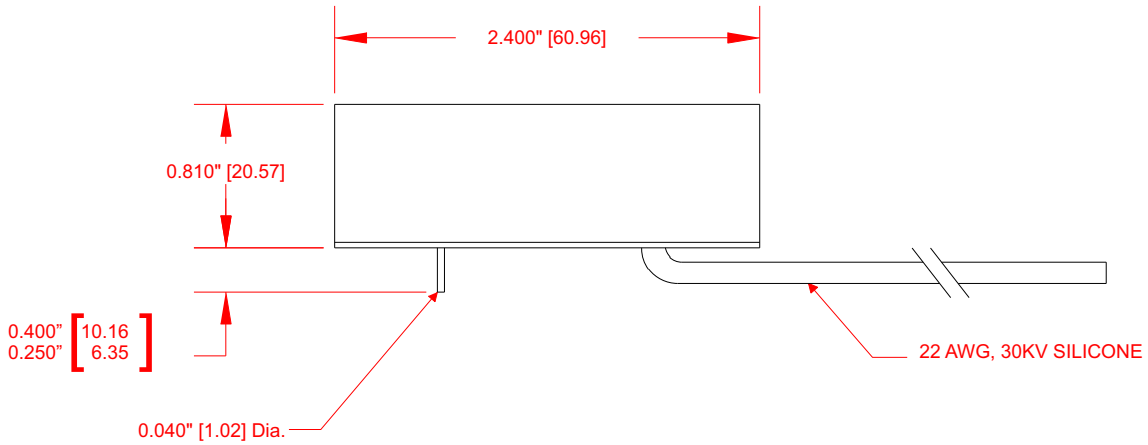

PIN#	FUNCTION
1	+ Input
2	- Input
3	+ Output
4	- Output

Dimensions are in Inches
[Metric equivalents in brackets]

P3 SERIES 3 WATT PROPORTIONAL HV DC/DC CONVERTERS

APPLICATION NOTES

INPUT AND OUTPUT IMPEDANCE

The P3 Series of power converters have been designed to be stable with no external capacitors when used in low inductance input and output circuits. However, in some applications, the inductance associated with the distribution from the power source to the input of the converter can affect the stability of the converter. The addition of a 100 µF electrolytic capacitor with an ESR <1 Ohm across the input helps ensure stability of the converter. In many applications, the user has to use decoupling capacitance at the load.

SHORT CIRCUIT PROTECTION

The P3 Series is equipped with short circuit protection. The converter will fold-back the input power whenever a short circuit is applied to its output and automatically recover after the overload condition is removed.

ISOLATION

The output of the P3 Series is galvanically isolated from the input, capacitance is < 30pF and resistance is > 10G Ohm. For dual output units Isolation is from Com output pin (5) and -Input (2).

RIPPLE AND NOISE

Figure below shows a typical output voltage ripple waveform, measured at full rated load current with no additional output filtering. External low ESR capacitors may be added across output to further reduce ripple.

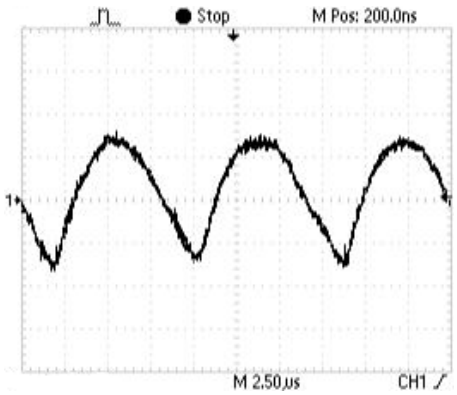

STARTUP TRANSIENT

Figure below shows a typical output voltage during turn-on, measured at no load current with no additional output filtering.

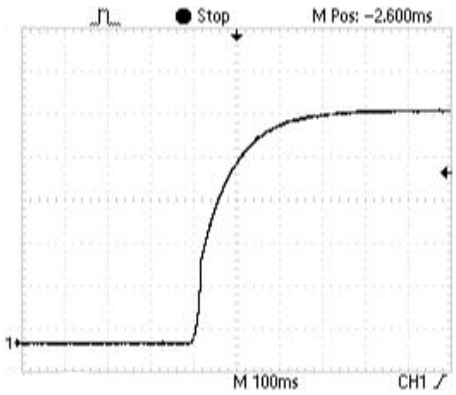

Figure below shows a typical output voltage during turn-on, measured at full rated load current with no additional output filtering.

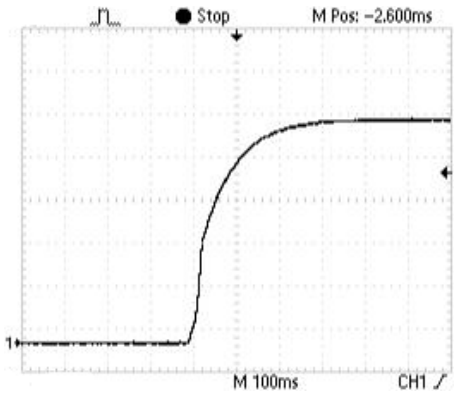

P3 SERIES 3 WATT PROPORTIONAL HV DC/DC CONVERTERS

APPLICATION NOTES

INRUSH CURRENT

The inrush current of the P3 Series has been kept as low as possible. However, a series resistor may be inserted in the input line to limit this current further.

LOAD TRANSIENT

Figure below shows a typical output voltage response, measured during a transition from full rated load current to no load current with no additional output filtering.

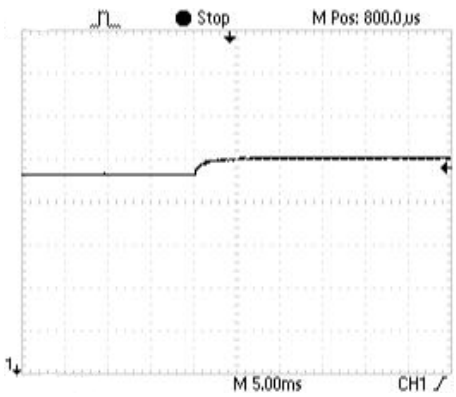

Figure below shows a typical output voltage response, measured during a transition from no load current to full rated load current with no additional output filtering.

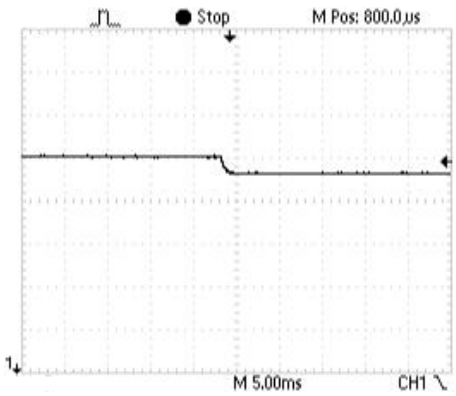

CONNECTION IN PARALLEL

The figures below shows how to connect outputs of several units with equal nominal output voltage in parallel with the use of oring diodes.

POSITIVE OUTPUT

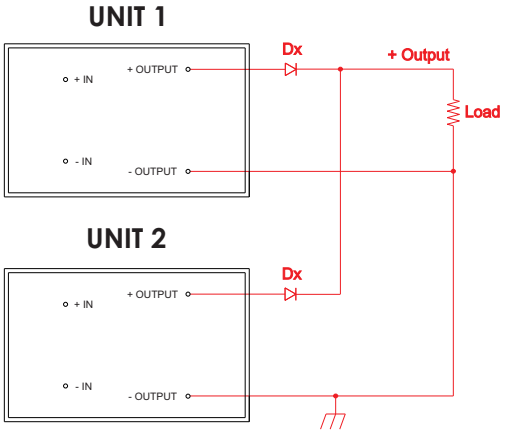

NEGATIVE OUTPUT

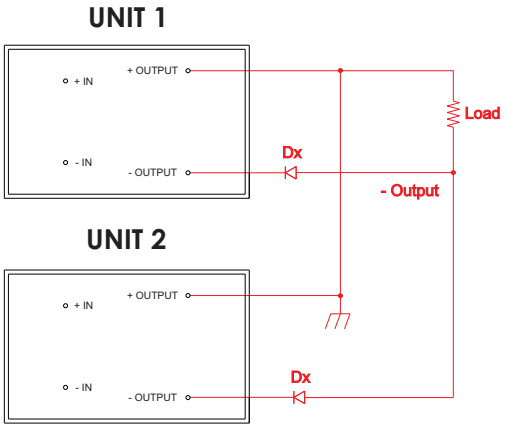

NOTE:
The ratings of Dx should be 1.5 times the maximum current and voltage expected in each branch.

P3 SERIES 3 WATT PROPORTIONAL HV DC/DC CONVERTERS

CONNECTION IN SERIES

Figures below shows how to connect multiple outputs in series with the use of shunt diodes, taking into consideration that the highest achieved output voltage should remain below the rated isolation voltage.

POSITIVE OUTPUT

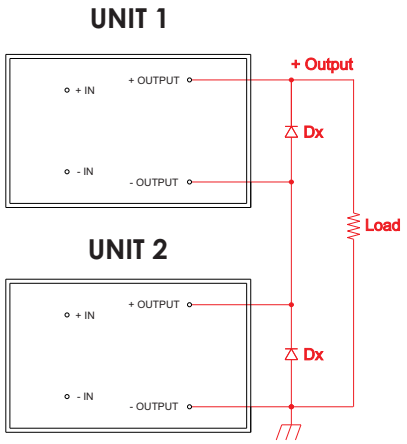

NEGATIVE OUTPUT

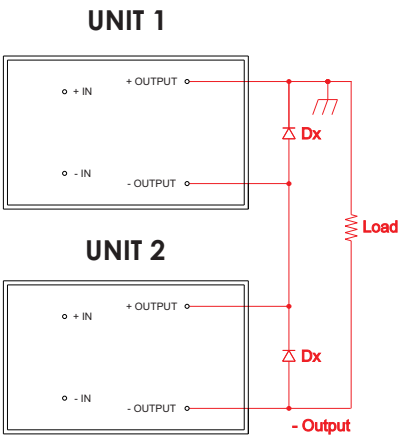

DUAL OUTPUT

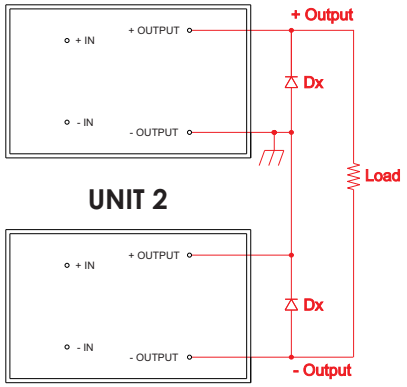

NOTE:
The ratings of Dx should be 1.5 times the maximum current and voltage expected in each branch.

P3 SERIES 3 WATT PROPORTIONAL HV DC/DC CONVERTERS

APPLICATION NOTES

POSITIVE OR NEGATIVE OUTPUTS

Isolated DC-DC voltage converters can provide positive or negative voltages from a single device.

Isolated DC-DC converters may also be used with either a positive or a negative input voltage source, as long as the relative polarity of the input to the device is maintained.

The figures below show the various polarity combinations and how to connect the converter to provide them relative to ground.

POSITIVE SOURCE WITH A POSITIVE OUTPUT

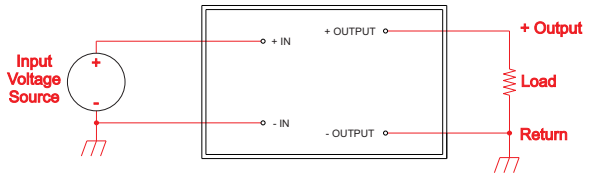

POSITIVE SOURCE WITH A NEGATIVE OUTPUT

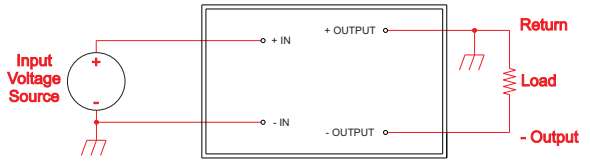

NEGATIVE SOURCE WITH A POSITIVE OUTPUT

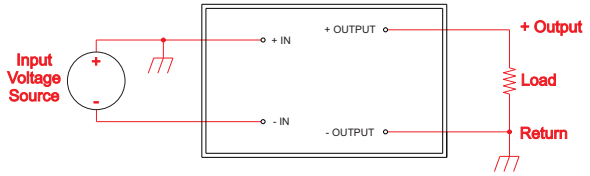

NEGATIVE SOURCE WITH A NEGATIVE OUTPUT

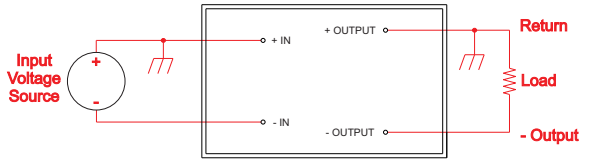

CONNECTIONS FOR DUAL OUTPUTS

Isolation on a dual output converter is from Com output pin (5) and -Input (2) and therefore ground connection on the output is to Com pin only.

The figures below shows how to power a dual output converter with either a positive or a negative input voltage source.

POSITIVE VOLTAGE SOURCE

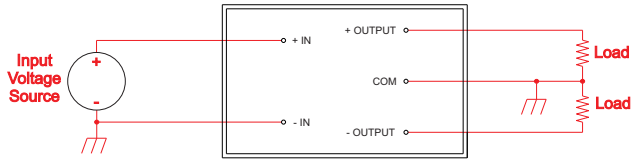

NEGATIVE VOLTAGE SOURCE

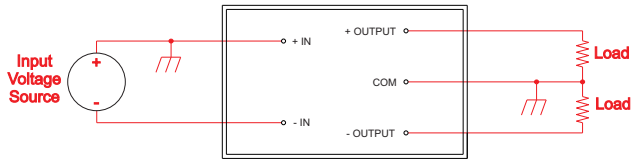

NOTE:
The (- In) must be kept negative with respect to the (+In) pin. If this polarity is reversed, permanent damage to the converter may occur.

P3 SERIES 3 WATT PROPORTIONAL HV DC/DC CONVERTERS

APPLICATION NOTES

CLEANING AGENTS

In order to avoid possible damage, any penetration of cleaning fluids must be prevented, since the power supplies are not hermetically sealed.

NUCLEAR AND MEDICAL APPLICATIONS

American Power Design products are not designed, intended for use in, or authorized for use as critical components in life support systems, equipment used in hazardous environments, or nuclear control systems without the express written consent of American Power Design, Inc.

TECHNICAL REVISIONS

The appearance of products, including safety agency certifications pictured on labels, may change depending on the date manufactured. Specifications are subject to change without notice.

SAFETY REQUIREMENTS

The converters are designed to meet North American and International safety regulatory requirements per UL 60950-1/CSA 22.2 No. 60950-1-07 Second Edition, IEC 60950-1: 2005, and EN 60950-1:2006. Basic Insulation is provided between input and output. To comply with safety agencies requirements, an input line fuse must be used external to the converter. The table below provides the recommended fuse rating for use with this family of products.

Input Voltage Range	Fuse Rating
0-12Vdc	0.5A
0-15Vdc	0.5A

If one input fuse is used for a group of modules, the maximum fuse rating should not exceed 10A.

WARRANTY

All products manufactured by American Power Design, Inc. (APD) are warranted to be free of defects due to material or workmanship for a period of one year from date of shipment. At our option, APD will repair or replace any non-conforming product.
APD expressly disclaims any liability for consequential or incidental damages resulting from the use or misuse of its products by the purchaser or others.
This warranty is in lieu of all warranties expressed or implied, including the warranties of merchantability. No other warranties, obligations, or liabilities are expressed or implied.
All products being returned for repair require a return material authorization(RMA) assigned by APD prior to return shipment.

American Power Design, Inc.

"The best high voltage design solution"

RoHS

P5 SERIES 5 WATT HIGH VOLTAGE DC/DC CONVERTERS

FEATURES

- Customer Selects Output Voltage
- Outputs to 4000 Vdc
- Proportional Output Voltage
- Industry Standard Pinouts
- Extended Temperature Range
- 60 kHz Switching Frequency
- 5000 Vdc Output Isolation
- Continuous Short Circuit Protection

The P5 Series of miniature DC/DC converters offers a 5000 Vdc isolated high voltage output directly proportional to input voltage. They are available in alternate industry standard pinouts. All models will tolerate a short circuit indefinitely. They also include a LC input filter to minimize reflected ripple current.

ELECTRICAL SPECIFICATIONS

Voltage Accuracy	+/-10%
Line Regulation	Proportional
Load Regulation	+/- 10%
Output Ripple	< 1% P-P
Input Filter	LC Input Filter
Efficiency	75% (typ.)
Short Circuit Protection	Continuous
Switching Frequency	60 kHz
Output Isolation	5000 Vdc
Input / Output Capacitance	< 30pF

GENERAL SPECIFICATIONS

Temp. Stability	+/-0.02%/°C
Temp. (Operating , Case)	-20 to +85°C
Temp. (Storage)	-55 to +100°C
EMI/RFI	Shielded Version Available *(Suffix /S)*
Derating	None
Cooling	Free-Air Convection

PHYSICAL SPECIFICATIONS

Dimensions	1.5 x 2.4 x 0.81 inches
Weight	3.1 Oz
Case Material	Black Phenolic

Tel (888) 894-4446 WWW.APOWERDESIGN.COM Fax (603) 898-6534

P5 SERIES 5 WATT HIGH VOLTAGE DC/DC CONVERTERS

REPRESENTATIVE MODEL LISTING						
MODEL NUMBER		INPUT SPECIFICATIONS		OUTPUT SPECIFICATIONS		
Non-RoHs	RoHs	VOLTAGE	CURRENT	VOLTAGE	RIPPLE	CURRENT
P5-10	P5-10/Y	4V - 12Vdc	560 mA	33V - 100Vdc	0.5V p-p	50 mA
P5-20	P5-20/Y	4V - 12Vdc	560 mA	67V - 200Vdc	1V p-p	25 mA
P5-30	P5-30/Y	4V - 12Vdc	560 mA	100V - 300Vdc	1.5V p-p	17 mA
P5-50	P5-50/Y	4V - 12Vdc	560 mA	166V - 500Vdc	2.5V p-p	10 mA
P5-100	P5-100/Y	4V - 12Vdc	560 mA	333V - 1kVdc	5V p-p	5 mA
P5-120	P5-120/Y	4V - 12Vdc	560 mA	400V - 1.2kVdc	6V p-p	4.2 mA
P5-130	P5-130/Y	4V - 12Vdc	560 mA	433V - 1.3kVdc	6.5V p-p	3.8 mA
P5-150	P5-150/Y	4V - 12Vdc	560 mA	500V - 1.5kVdc	7.5V p-p	3.3 mA
P5-200	P5-200/Y	4V - 12Vdc	560 mA	666V - 2kVdc	20V p-p	2.5 mA
P5-220	P5-220/Y	4V - 12Vdc	560 mA	733V - 2.2kVdc	22V p-p	2.3 mA
P5-230	P5-230/Y	4V - 12Vdc	560 mA	766V - 2.3kVdc	23V p-p	2.2 mA
P5-250	P5-250/Y	4V - 12Vdc	560 mA	833V - 2.5kVdc	25V p-p	2 mA
P5-300	P5-300/Y	4V - 12Vdc	560 mA	1kV - 3kVdc	30V p-p	1.7 mA
P5-320	P5-320/Y	4V - 12Vdc	560 mA	1.06kV - 3.2kVdc	32V p-p	1.6 mA
P5-330	P5-330/Y	4V - 12Vdc	560 mA	1.1kV - 3.3kVdc	33V p-p	1.5 mA
P5-350	P5-350/Y	4V - 12Vdc	560 mA	1.16kV - 3.5kVdc	35V p-p	1.4 mA
P5-400	P5-400/Y	4V - 12Vdc	560 mA	1.33kV - 4kVdc	40V p-p	1.3 mA

P5-100/A/Y

Product Family

Total Output Power

/Y RoHS Compliance

/A Alternate Pinout A

Customer Selects Output Voltage*

The P5 Series are designed such that the customer may order any output voltage from 100Vdc to 4kVdc at no additional charge.

ACTUAL OUTPUT VOLTAGE IS 10X

P5 SERIES 5 WATT HIGH VOLTAGE DC/DC CONVERTERS

STANDARD & ALTERNATE (/A)

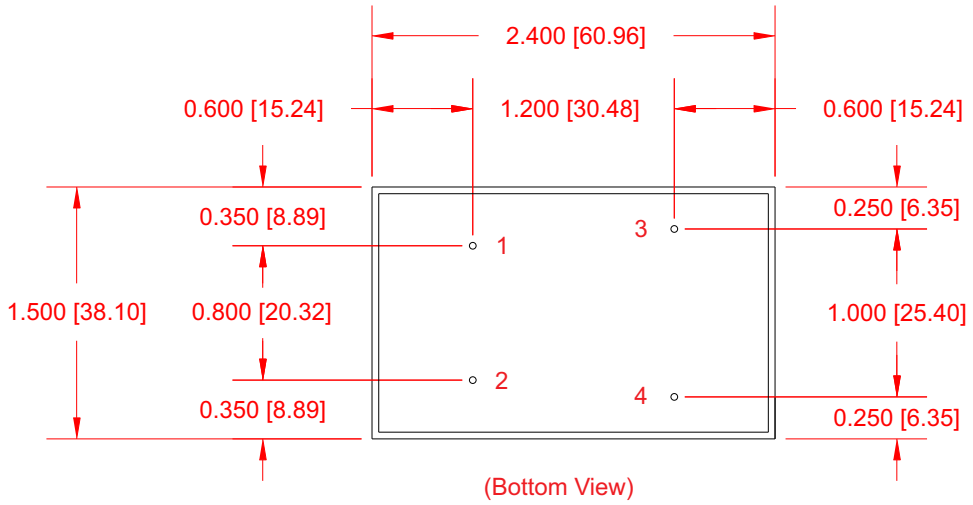

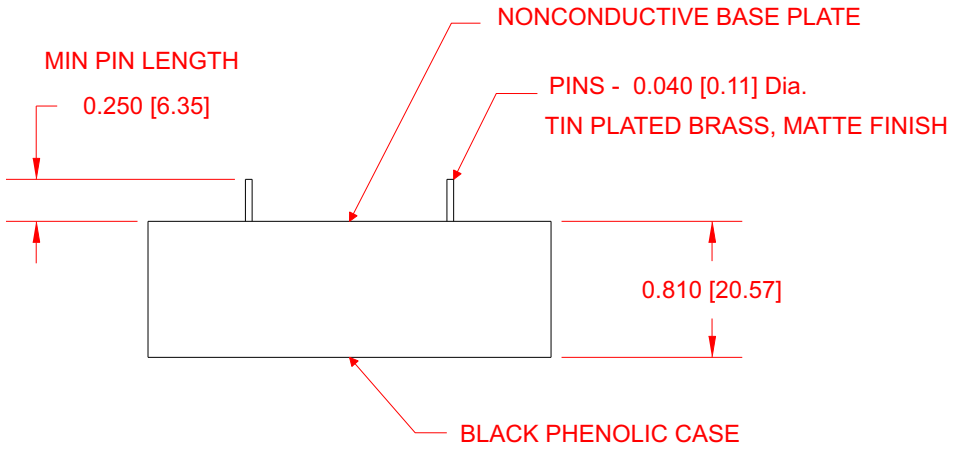

PIN #	STANDARD	ALTERNATE (/A)
1	+ Input	+ Input
2	- Input	- Input
3	- Output	+Output
4	+ Output	- Output

Dimensions are in Inches
[Metric equivalents in brackets]

P5 SERIES 5 WATT HIGH VOLTAGE DC/DC CONVERTERS

APPLICATION NOTES

INPUT AND OUTPUT IMPEDANCE

The P5 Series of power converters have been designed to be stable with no external capacitors when used in low inductance input and output circuits. However, in some applications, the inductance associated with the distribution from the power source to the input of the converter can affect the stability of the converter. The addition of a 100 µF electrolytic capacitor with an ESR <1 Ohm across the input helps ensure stability of the converter. In many applications, the user has to use decoupling capacitance at the load.

SHORT CIRCUIT PROTECTION

The P5 Series is equipped with short circuit protection. The converter will fold-back the input power whenever a short circuit is applied to its output and automatically recover after the overload condition is removed.

ISOLATION

The output of the P5 Series is galvanically isolated from the input, capacitance is < 30pF and resistance is > 10G Ohm.

RIPPLE AND NOISE

Figure below shows a typical output voltage ripple waveform, measured at full rated load current with no additional output filtering. External low ESR capacitors may be added across output to further reduce ripple.

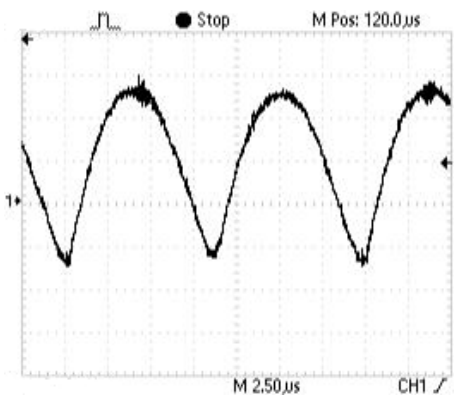

STARTUP TRANSIENT

Figure below shows a typical output voltage during turn-on, measured at no load current with no additional output filtering.

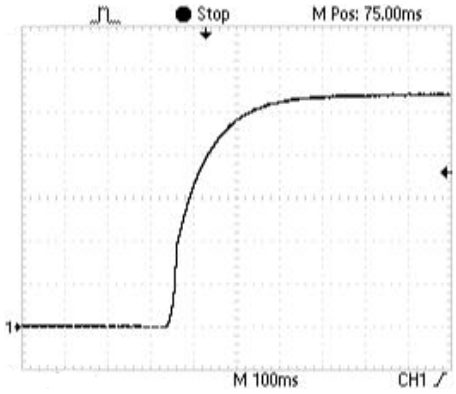

Figure below shows a typical output voltage during turn-on, measured at full rated load current with no additional output filtering.

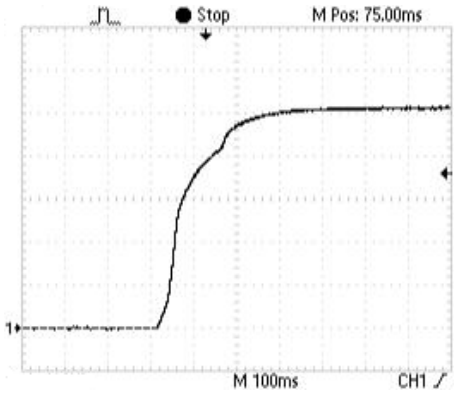

P5 SERIES 5 WATT HIGH VOLTAGE DC/DC CONVERTERS

APPLICATION NOTES

INRUSH CURRENT

The inrush current of the P5 Series has been kept as low as possible. However, a series resistor may be inserted in the input line to limit this current further.

LOAD TRANSIENT

Figure below shows a typical output voltage response, measured during a transition from full rated load current to no load current with no additional output filtering.

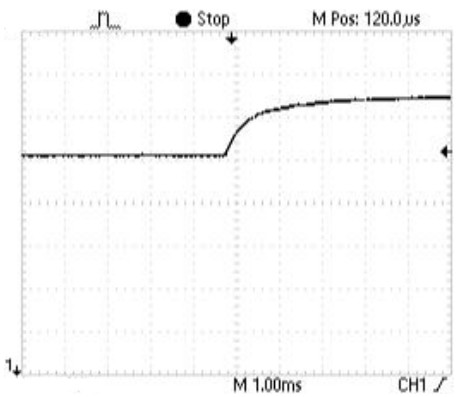

Figure below shows a typical output voltage response, measured during a transition from no load current to full rated load current with no additional output filtering.

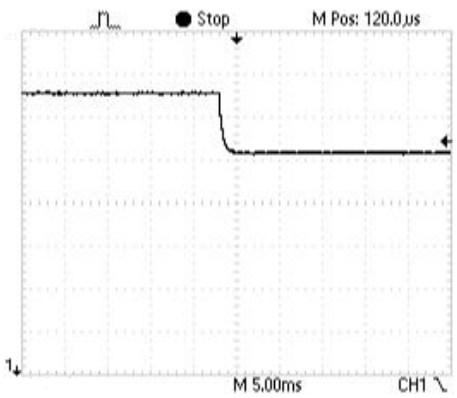

CONNECTION IN PARALLEL

The figure below shows how to connect outputs of several units with equal nominal output voltage in parallel with the use of oring diodes.

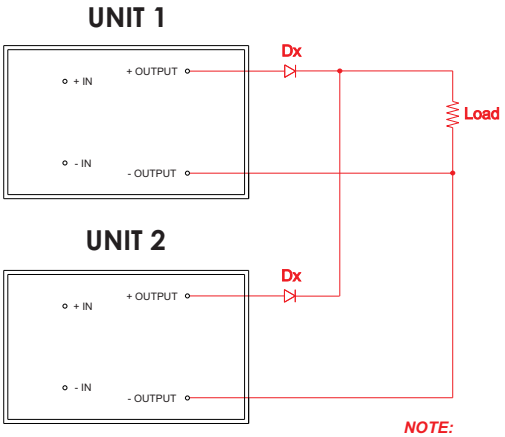

NOTE:
The ratings of Dx should be 1.5 times the maximum current and voltage expected in each branch.

CONNECTION IN SERIES

Figure below shows how to connect multiple outputs in series with the use of shunt diodes, taking into consideration that the highest achieved output voltage should remain below the rated isolation voltage.

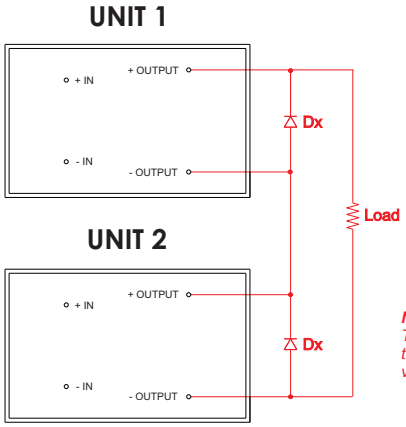

NOTE:
The ratings of Dx should be 1.5 times the maximum current and voltage expected in each branch.

P5 SERIES 5 WATT HIGH VOLTAGE DC/DC CONVERTERS

APPLICATION NOTES

CLEANING AGENTS

In order to avoid possible damage, any penetration of cleaning fluids must be prevented, since the power supplies are not hermetically sealed.

NUCLEAR AND MEDICAL APPLICATIONS

American Power Design products are not designed, intended for use in, or authorized for use as critical components in life support systems, equipment used in hazardous environments, or nuclear control systems without the express written consent of American Power Design, Inc.

TECHNICAL REVISIONS

The appearance of products, including safety agency certifications pictured on labels, may change depending on the date manufactured. Specifications are subject to change without notice.

SAFETY REQUIREMENTS

The converters are designed to meet North American and International safety regulatory requirements per UL 60950-1/CSA 22.2 No. 60950-1-07 Second Edition, IEC 60950-1: 2005, and EN 60950-1:2006. Basic Insulation is provided between input and output. To comply with safety agencies requirements, an input line fuse must be used external to the converter. The table below provides the recommended fuse rating for use with this family of products.

Input Voltage Range	Fuse Rating
4-12Vdc	1A

If one input fuse is used for a group of modules, the maximum fuse rating should not exceed 10A.

WARRANTY

All products manufactured by American Power Design, Inc. (APD) are warranted to be free of defects due to material or workmanship for a period of one year from date of shipment. At our option, APD will repair or replace any non-conforming product.
APD expressly disclaims any liability for consequential or incidental damages resulting from the use or misuse of its products by the purchaser or others.
This warranty is in lieu of all warranties expressed or implied, including the warranties of merchantability. No other warranties, obligations, or liabilities are expressed or implied.
All products being returned for repair require a return material authorization(RMA) assigned by APD prior to return shipment.

American Power Design, Inc.

"The best high voltage design solution"

RoHS

P10 SERIES 10 WATT HIGH VOLTAGE DC/DC CONVERTERS

FEATURES

- Customer Selects Output Voltage
- Outputs to 8000 Vdc
- Proportional Output Voltage
- Six-Sided Shielded Case
- 60 kHz Switching Frequency
- 5000 Vdc Output Isolation
- Continuous Short Circuit Protection

The P10 Series of DC/DC converters offer a 5000 Vdc isolated high voltage output directly proportional to input voltage. All models will tolerate a short circuit indefinitely. They also include a Pi Network input filter to minimize reflected ripple current.

ELECTRICAL SPECIFICATIONS

Voltage Accuracy	+/-10%
Line Regulation	Proportional
Load Regulation	+/- 10%
Output Ripple	< 0.3% P-P
Input Filter	Pi Network
Efficiency	74% (typ.)
Short Circuit Protection	Continuous
Switching Frequency	60 kHz
Output Isolation	5000 Vdc
Input / Output Capacitance	< 60pF

GENERAL SPECIFICATIONS

Temp. Stability	+/-0.02%/°C
Temp. (Operating , Case)	-25 to +85°C
Temp. (Storage)	-55 to +100°C
EMI/RFI	Six-Sided Shielded
Derating	None
Cooling	Free-Air Convection

PHYSICAL SPECIFICATIONS

Dimensions	2.5 x 3.5 x 0.88 inches
Weight	9.5 Oz
Case Material	Nickel Plated Metal *(With Non-Conductive Base Plate)*

P10 SERIES 10 WATT HIGH VOLTAGE DC/DC CONVERTERS

REPRESENTATIVE MODEL LISTING						
MODEL NUMBER		INPUT SPECIFICATIONS		OUTPUT SPECIFICATIONS		
Non-RoHs	RoHs	VOLTAGE	CURRENT	VOLTAGE	RIPPLE	CURRENT
P10-10	P10-10/Y	4V - 12Vdc	1.1 A	33V - 100Vdc	0.3V p-p	100 mA
P10-50	P10-50/Y	4V - 12Vdc	1.1 A	166V - 500Vdc	1.5V p-p	20 mA
P10-100	P10-100/Y	4V - 12Vdc	1.1 A	333V - 1kVdc	3V p-p	10 mA
P10-150	P10-150/Y	4V - 12Vdc	1.1 A	500V - 1.5kVdc	4.5V p-p	6.6 mA
P10-200	P10-200/Y	4V - 12Vdc	1.1 A	666V - 2kVdc	6V p-p	5 mA
P10-250	P10-250/Y	4V - 12Vdc	1.1 A	833V - 2.5kVdc	7.5V p-p	4 mA
*P10-300/B	*P10-300/B/Y	4V - 12Vdc	1.1 A	1kV - 3kVdc	9V p-p	3.3 mA
*P10-350/B	*P10-350/B/Y	4V - 12Vdc	1.1 A	1.16kV - 3.5kVdc	10V p-p	2.8 mA
*P10-400/B	*P10-400/B/Y	4V - 12Vdc	1.1 A	1.33kV - 4kVdc	10V p-p	2.5 mA
*P10-450/B	*P10-450/B/Y	4V - 12Vdc	1.1 A	1.5kV - 4.5kVdc	10V p-p	2.2 mA
*P10-500/B	*P10-500/B/Y	4V - 12Vdc	1.1 A	1.66V - 5kVdc	10V p-p	2 mA
*P10-550/B	*P10-550/B/Y	4V - 12Vdc	1.1 A	1.83V - 5.5kVdc	10V p-p	1.8 mA
*P10-600/B	*P10-600/B/Y	4V - 12Vdc	1.15 A	2kV - 6kVdc	10V p-p	1.6 mA
*P10-650/B	*P10-650/B/Y	4V - 12Vdc	1.15 A	2.16V - 6.5kVdc	10V p-p	1.5 mA
*P10-700/B	*P10-700/B/Y	4V - 12Vdc	1.15 A	2.33V - 7kVdc	10V p-p	1.4 mA
*P10-800/B	*P10-800/B/Y	4V - 12Vdc	1.15 A	2.66kV - 8kVdc	10V p-p	1.2 mA

** For output voltages 3kVdc to 8kVdc /B pinout is required.*

P10-100/B/Y

Product Family

Total Output Power

/Y RoHS Compliance

Industry Standard Pinouts
/A Alternate Pinout A
/B Alternate Pinout B

Customer Selects Output Voltage

The P10 Series are designed such that the customer may order any output voltage from 100Vdc to 8kVdc at no additional charge.

[ACTUAL OUTPUT VOLTAGE IS 10X]

P10 SERIES 10 WATT HIGH VOLTAGE DC/DC CONVERTERS

STANDARD & ALTERNATE (/A)

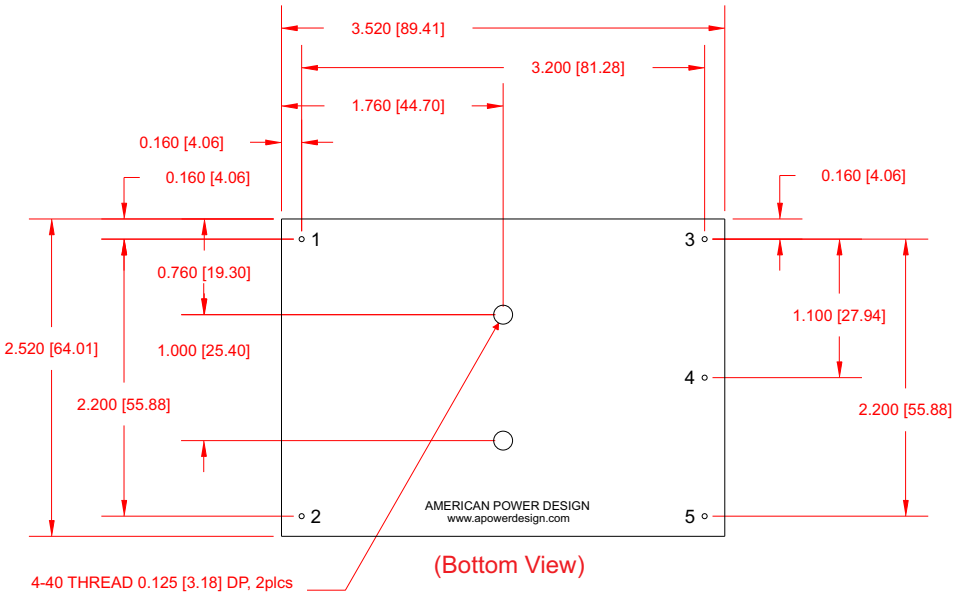

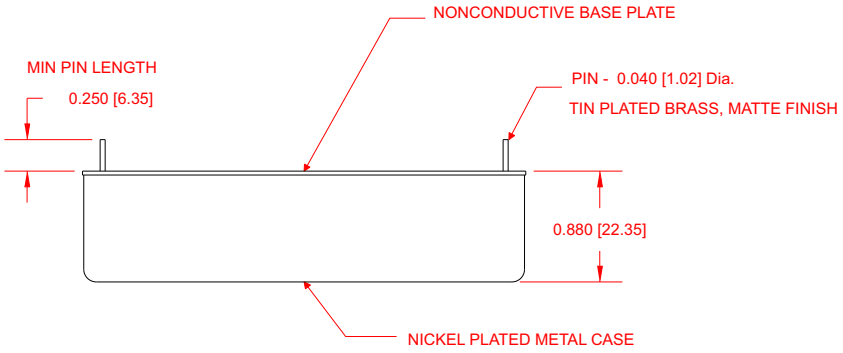

PIN #	STANDARD	ALTERNATE (/A)
1	+ Input	+ Input
2	- Input	- Input
3	+ Output	- Output
4	N/C	N/C
5	- Output	+ Output

Dimensions are in Inches
[Metric equivalents in brackets]

P10 SERIES 10 WATT HIGH VOLTAGE DC/DC CONVERTERS

ALTERNATE (/B) *(Required for outputs 3kVdc to 8kVdc)*

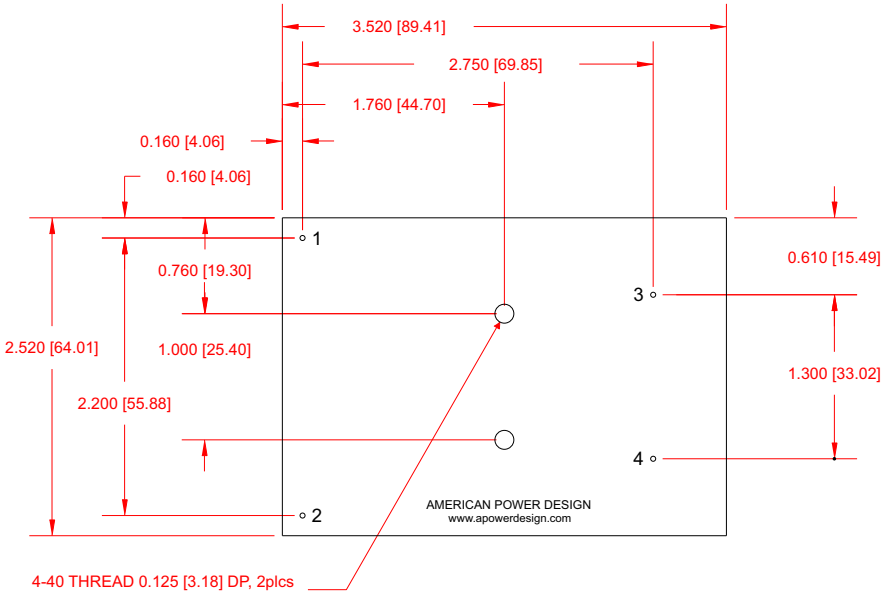

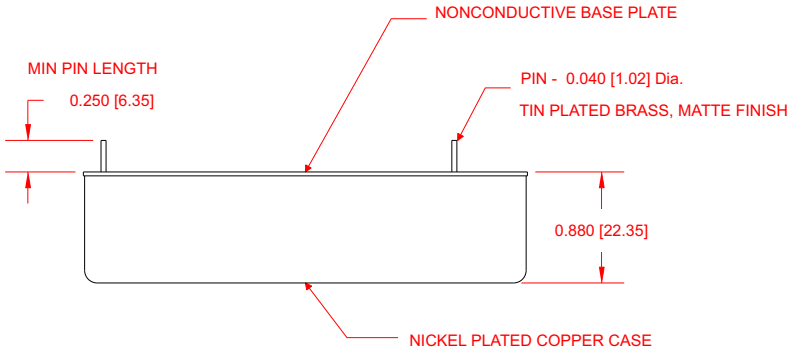

PIN #	ALTERNATE (/B)
1	+ Input
2	- Input
3	+ Output
4	- Output

Dimensions are in Inches
[Metric equivalents in brackets]

P10 SERIES 10 WATT HIGH VOLTAGE DC/DC CONVERTERS

APPLICATION NOTES

INPUT AND OUTPUT IMPEDANCE

The P10 Series of power converters have been designed to be stable with no external capacitors when used in low inductance input and output circuits. However, in some applications, the inductance associated with the distribution from the power source to the input of the converter can affect the stability of the converter. The addition of a 100 µF electrolytic capacitor with an ESR <1 Ohm across the input helps ensure stability of the converter. In many applications, the user has to use decoupling capacitance at the load.

SHORT CIRCUIT PROTECTION

The P10 Series is equipped with short circuit protection. The converter will fold-back the input power whenever a short circuit is applied to its output and automatically recover after the overload condition is removed.

ISOLATION

The output of the P10 Series is galvanically isolated from both the input and case, capacitance is < 60pF and resistance is > 10G Ohm.

RIPPLE AND NOISE

Figure below shows a typical output voltage ripple waveform, measured at full rated load current with no additional output filtering. External low ESR capacitors may be added across output to further reduce ripple.

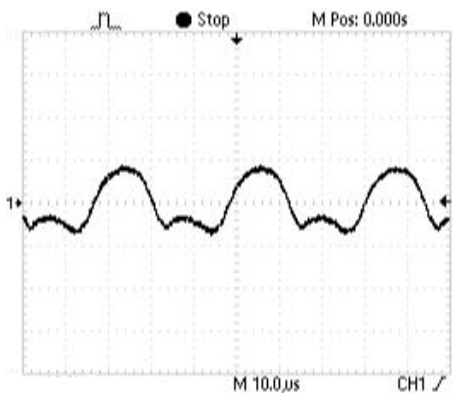

STARTUP TRANSIENT

Figure below shows a typical output voltage during turn-on, measured at no load current with no additional output filtering.

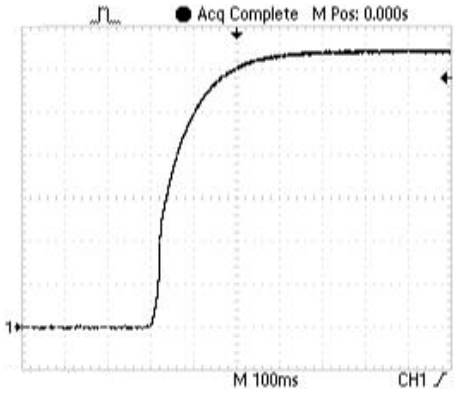

Figure below shows a typical output voltage during turn-on, measured at full rated load current with no additional output filtering.

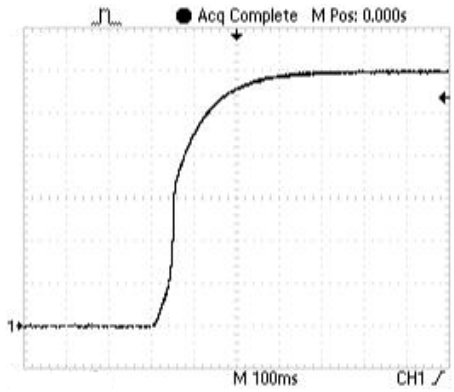

P10 SERIES 10 WATT HIGH VOLTAGE DC/DC CONVERTERS

APPLICATION NOTES

INRUSH CURRENT

The inrush current of the P10 Series has been kept as low as possible. However, a series resistor may be inserted in the input line to limit this current further.

LOAD TRANSIENT

Figure below shows a typical output voltage response, measured during a transition from full rated load current to no load current with no additional output filtering.

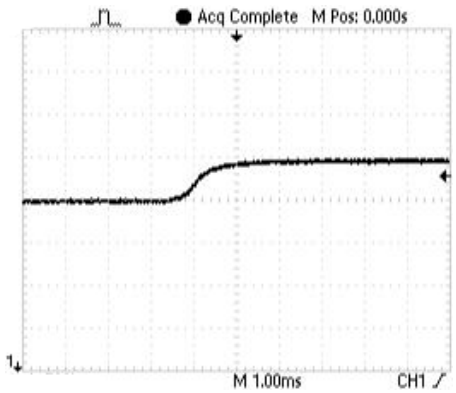

Figure below shows a typical output voltage response, measured during a transition from no load current to full rated load current with no additional output filtering.

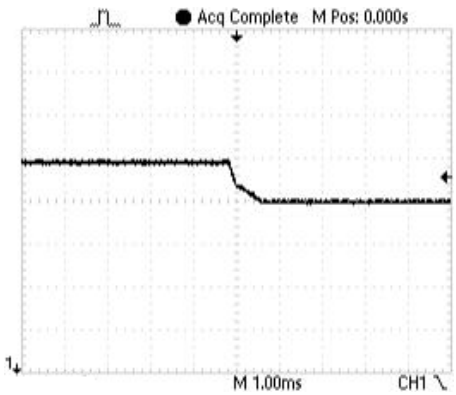

CONNECTION IN PARALLEL

The figure below shows how to connect outputs of several units with equal nominal output voltage in parallel with the use of oring diodes.

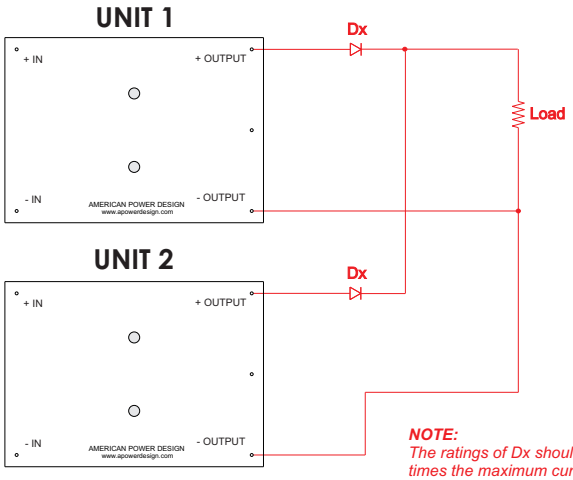

NOTE:
The ratings of Dx should be 1.5 times the maximum current and voltage expected in each branch.

CONNECTION IN SERIES

Figure below shows how to connect multiple outputs in series with the use of shunt diodes, taking into consideration that the highest achieved output voltage should remain below the rated isolation voltage.

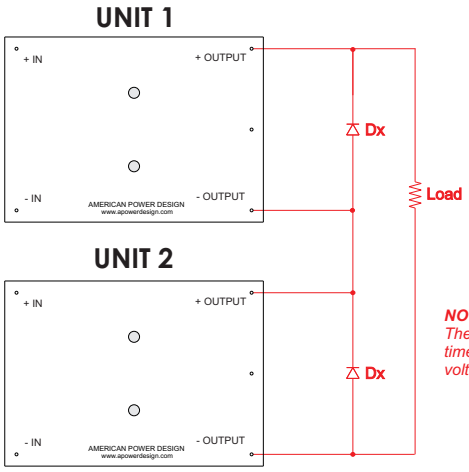

NOTE:
The ratings of Dx should be 1.5 times the maximum current and voltage expected in each branch.

P10 SERIES 10 WATT HIGH VOLTAGE DC/DC CONVERTERS

APPLICATION NOTES

CLEANING AGENTS

In order to avoid possible damage, any penetration of cleaning fluids must be prevented, since the power supplies are not hermetically sealed.

NUCLEAR AND MEDICAL APPLICATIONS

American Power Design products are not designed, intended for use in, or authorized for use as critical components in life support systems, equipment used in hazardous environments, or nuclear control systems without the express written consent of American Power Design, Inc.

TECHNICAL REVISIONS

The appearance of products, including safety agency certifications pictured on labels, may change depending on the date manufactured. Specifications are subject to change without notice.

SAFETY REQUIREMENTS

The converters are designed to meet North American and International safety regulatory requirements per UL 60950-1/CSA 22.2 No. 60950-1-07 Second Edition, IEC 60950-1: 2005, and EN 60950-1:2006. Basic Insulation is provided between input and output. To comply with safety agencies requirements, an input line fuse must be used external to the converter. The table below provides the recommended fuse rating for use with this family of products.

Input Voltage Range	Fuse Rating
4-12Vdc	1.5A

If one input fuse is used for a group of modules, the maximum fuse rating should not exceed 10A.

WARRANTY

All products manufactured by American Power Design, Inc. (APD) are warranted to be free of defects due to material or workmanship for a period of one year from date of shipment. At our option, APD will repair or replace any non-conforming product.
APD expressly disclaims any liability for consequential or incidental damages resulting from the use or misuse of its products by the purchaser or others.
This warranty is in lieu of all warranties expressed or implied, including the warranties of merchantability. No other warranties, obligations, or liabilities are expressed or implied.
All products being returned for repair require a return material authorization(RMA) assigned by APD prior to return shipment.

American Power Design, Inc.

"The best high voltage design solution"

RoHS

Q2 SERIES 2 WATT HIGH PRECISION REGULATED HV DC/DC CONVERTERS

FEATURES

- Customer Selects Output Voltage
- Fully Regulated Outputs to 5000 Vdc
- 0-100% Programable + or - Output
- High Stability (<0.005%/°C)
- Line / Load Regulation < 0.001%
- Ultra Low Output Noise & EMI/RFI
- Onboard Reference & Output Monitor
- Continuous Short Circuit Protection

The Q2 Series high voltage DC/DC converter offers a 100% programable high voltage output using a 0 to 9Vdc analog signal. Their exceptionally low noise, regulation, and stability make them ideally suited for applications including: Photomultiplier tubes, MASS Spectrometers, Radiation Counters and Ultrasonic Transducers

ELECTRICAL SPECIFICATIONS

Input Voltage Range	24V to 30Vdc
Output Voltage Accuracy	< 1%
Line Regulation	<0.001%
Load Regulation	<0.001%
Output Ripple	See Table
Onboard Precision Reference	9Vdc @ 10mA
Programming Voltage	0 to +9Vdc @ <100uA
Programming Linearity	<1%
Input Filter	Low ESR Capacitor
Reverse Input Protection	50Vdc
Efficiency	> 50%
Short Circuit Protection	Continuous
Switching Frequency	150 - 250 kHz
Programming Voltage Shutdown	> 9.2Vdc
Response Time	<500 ms (Full Load, full scale response)
Output Voltage Monitor	<1%

GENERAL SPECIFICATIONS

Stability	< 0.005% / Hr.
Temp. Stability	+/- 0.005%/°C
Temp. (Operating , Case)	0 to +50°C
Temp. (Storage)	-40 to +85°C
Humidity	20 to 85% (Non-Condensing)
Thermal Shock Limit	1°C / 10 Seconds
EMI/RFI	Six Sided Shield
Derating	None
Cooling	Free-Air Convection
Certifications	Designed to meet UL60950

PHYSICAL SPECIFICATIONS

Dimensions	5.12 x 2.9 x 1.0 inches
Weight	4.8 Oz
Case Material	Coated Aluminum

NOTE: *Specifications are at the maximum rated output after a 30 minute warm-up period unless otherwise specified.*

Tel (888) 894-4446 WWW.APOWERDESIGN.COM Fax (603) 898-6534

Q2 SERIES 2 WATT HIGH PRECISION REGULATED HV DC/DC CONVERTERS

REPRESENTATIVE MODEL LISTING							
MODEL NUMBER		OUTPUT SPECIFICATIONS					SWITCHING FREQUENCY
Non-RoHs	RoHs	VOLTAGE	RIPPLE	CURRENT	REGULATION		
					LOAD	LINE	
Q2-P50	Q2-P50/Y	0V to +500Vdc	<0.001% (5mV p-p)	0 - 4mA	<0.001%	<0.001%	250 kHz
Q2-N50	Q2-N50/Y	0V to -500Vdc	<0.001% (5mV p-p)	0 - 4mA	<0.001%	<0.001%	250 kHz
Q2-P100	Q2-P100/Y	0V to +1000Vdc	<0.0002% (2mV p-p)	0 - 2mA	<0.001%	<0.001%	250 kHz
Q2-N100	Q2-N100/Y	0V to -1000Vdc	<0.0002% (2mV p-p)	0 - 2mA	<0.001%	<0.001%	250 kHz
Q2-P150	Q2-P150/Y	0V to +1500Vdc	<0.0013% (2mV p-p)	0 - 1.3mA	<0.001%	<0.001%	250 kHz
Q2-N150	Q2-N150/Y	0V to -1500Vdc	<0.0013% (2mV p-p)	0 - 1.3mA	<0.001%	<0.001%	250 kHz
Q2-P200	Q2-P200/Y	0V to +2000Vdc	<0.0001% (2mV p-p)	0 - 1mA	<0.001%	<0.001%	250 kHz
Q2-N200	Q2-N200/Y	0V to -2000Vdc	<0.0001% (2mV p-p)	0 - 1mA	<0.001%	<0.001%	250 kHz
Q2-P300	Q2-P300/Y	0V to +3000Vdc	<0.0001% (3mV p-p)	0 - 0.65mA	<0.001%	<0.001%	200 kHz
Q2-N300	Q2-N300/Y	0V to -3000Vdc	<0.0001% (3mV p-p)	0 - 0.65mA	<0.001%	<0.001%	200 kHz
Q2-P500	Q2-P500/Y	0V to +5000Vdc	<0.0002% (10mV p-p)	0 - 0.4mA	<0.001%	<0.001%	200 kHz
Q2-N500	Q2-N500/Y	0V to -5000Vdc	<0.0002% (10mV p-p)	0 - 0.4mA	<0.001%	<0.001%	200 kHz

Q2-P100/Y

Product Family

Total Output Power

Positive/Negative Output

/Y RoHS Compliance

Customer Selects Output Voltage *

The Q2 Series are designed such that the customer may order any output voltage (positive or negative) from 500Vdc to 5000Vdc at no additional charge.

****ACTUAL OUTPUT VOLTAGE IS 10X***

Q2 SERIES 2 WATT HIGH PRECISION REGULATED HV DC/DC CONVERTERS

STANDARD CONFIGURATION

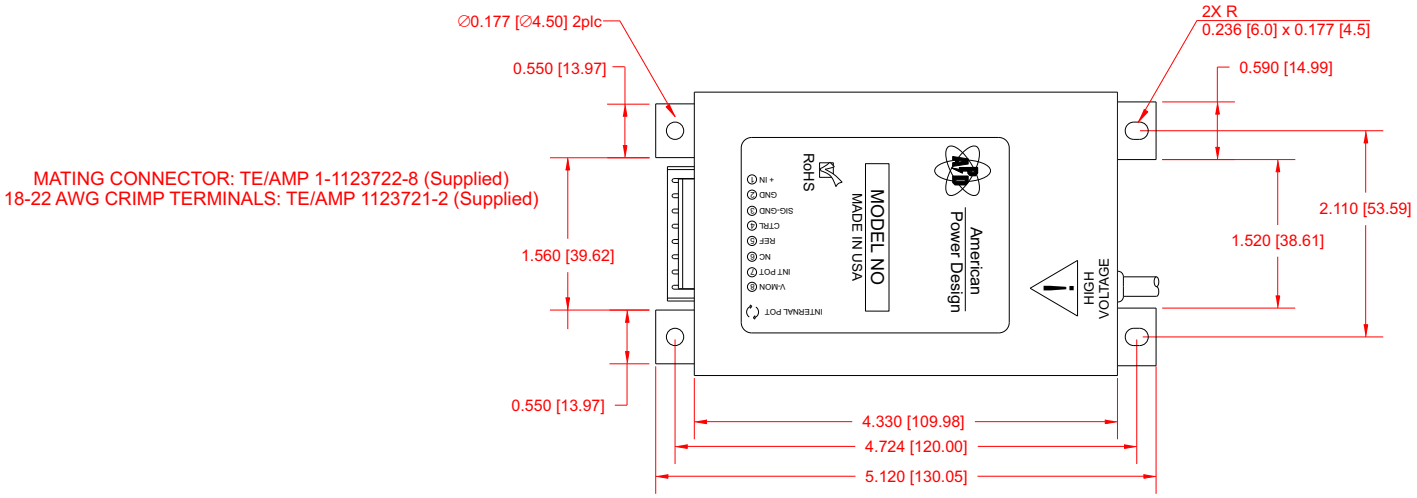

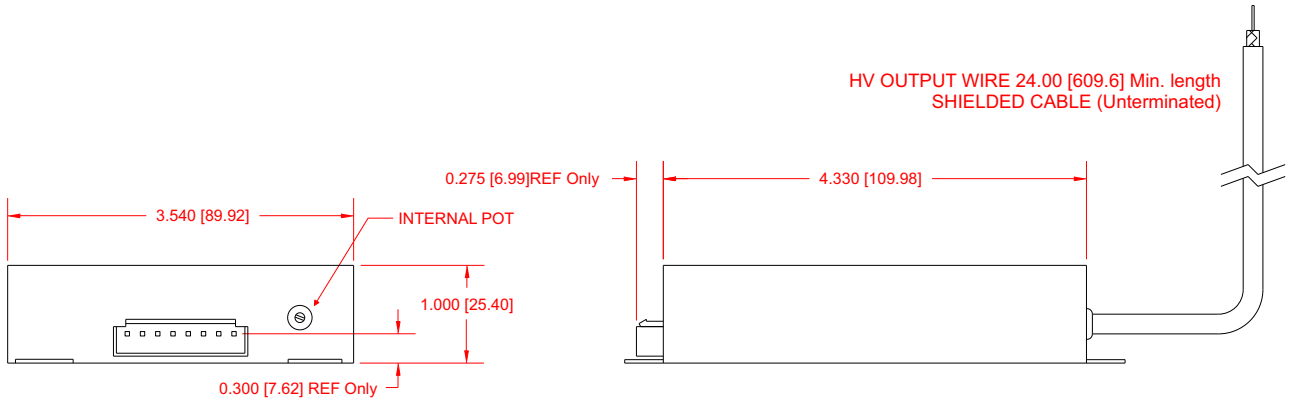

PIN #	FUNCTION	PIN #	FUNCTION
1	+ IN	5	V REFERENCE
2	GND	6	NC
3	SIG-GND	7	INTERNAL POT
4	CONTROL	8	V MONITOR

Dimensions are in Inches
[Metric equivalents in brackets]

Q2 SERIES 2 WATT HIGH PRECISION REGULATED HV DC/DC CONVERTERS

APPLICATION NOTES

INRUSH CURRENT

The inrush current of the Q2 Series has been kept as low as possible. However, a series resistor may be inserted in the input line to limit this current further.

REVERSE INPUT PROTECTION

The Q2 Series is equipped with a diode placed in series with the + Input of the converter. This allows current to flow only if the correct polarity is applied.

SHORT CIRCUIT PROTECTION

The Q2 Series is equipped with short circuit protection. The converter will fold-back the input power whenever a short circuit is applied to its output and automatically recover after the overload condition is removed.

OUTPUT VOLTAGE MONITOR

The Q2 is equipped with an output voltage monitor circuit. The voltage monitor is a precision resistor network that provides a low voltage output proportional to the converters output voltage.

The table below provides the voltage ratio and impedance for a given output voltage.

Output Voltage	Monitor Voltage	Impedance
0 to 500Vdc	0 to 5Vdc	50k
0 to 1000Vdc	0 to 1Vdc	10k
0 to 1500Vdc	0 to 1.5Vdc	25k
0 to 2000Vdc	0 to 2Vdc	25k
0 to 3000Vdc	0 to 3Vdc	30k
0 to 5000Vdc	0 to 5Vdc	100k

PROGRAMMING VOLTAGE

A 0V to +9V signal will program the power supply for 0 to 100% rated output voltage. The input impedance for this control pin is typically 100KΩ. If the programming signal exceeds 9.2Vdc the converter will shutdown and automatically recover when the programming signal returns to within normal operating range.

OUTPUT VOLTAGE TRACKING

The output voltage tracks the Control pin within 1% from 1% to 100% of output voltage.

Figure below show a typical plot of both the actual and calculated output voltage as a function of control voltage.

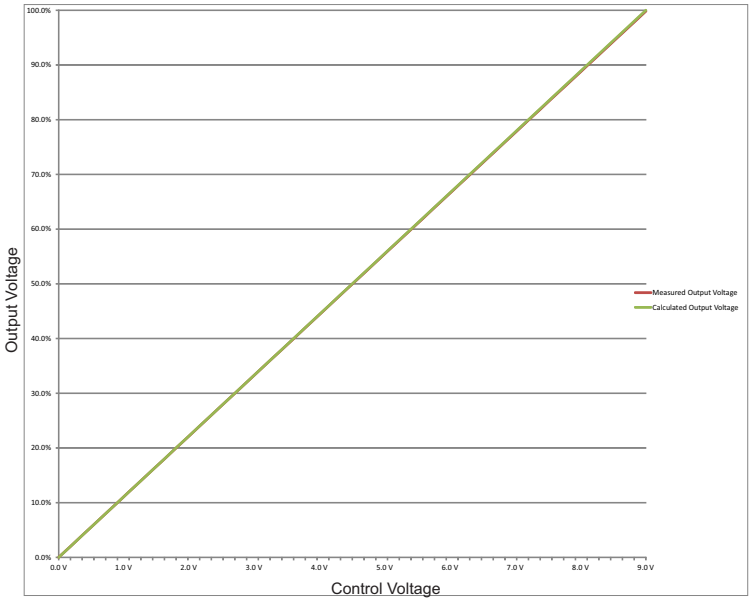

Operating Conditions:

Nominal Input Voltage = Fixed
Output Load = Resistive (fixed at full output current @ 100% output voltage)

Q2 SERIES 2 WATT HIGH PRECISION REGULATED HV DC/DC CONVERTERS

APPLICATION NOTES

INTERNAL POTENTIOMETER

The Q2 Series is equipped with a internal multi-turn potentiometer and can be utilized to control the output voltage.

Figures below shows the typical connections needed.

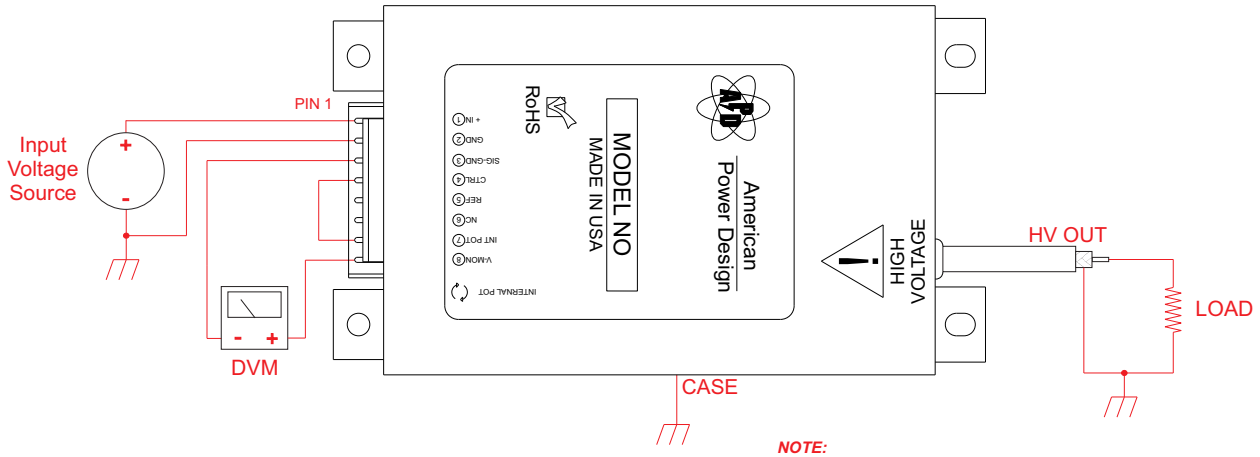

NOTE:

The Voltage Monitor polarity matches the high voltage output polarity

EXTERNAL / REMOTE POTENTIOMETER

The output voltage of the Q2 Series can be controlled with and external or remote potentiometer .

Figures below shows the typical connections needed.

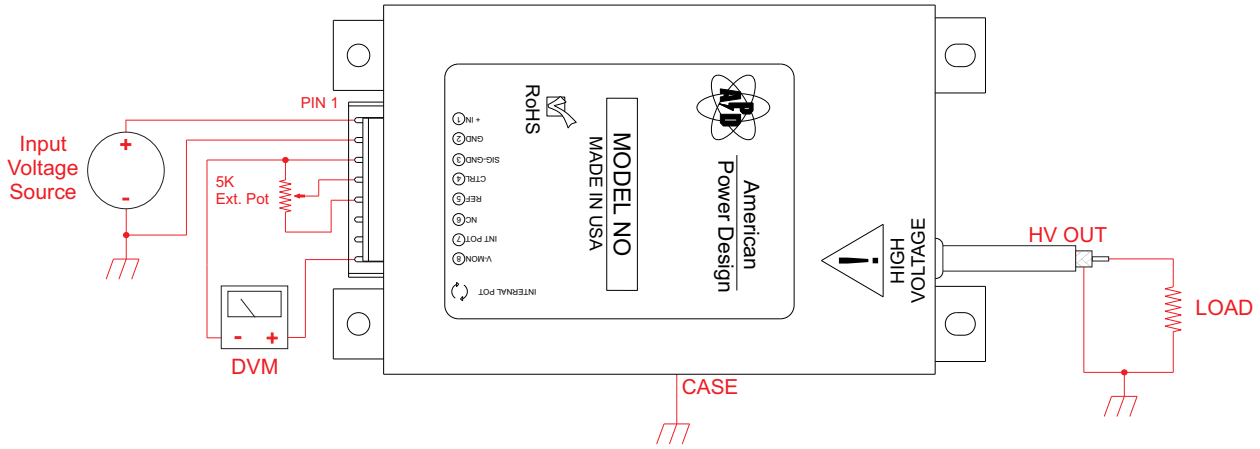

NOTE:

The Voltage Monitor polarity matches the high voltage output polarity

Q2 SERIES 2 WATT HIGH PRECISION REGULATED HV DC/DC CONVERTERS

APPLICATION NOTES

EXTERNAL / REMOTE VOLTAGE SOURCE

The output voltage of the Q2 Series can be controlled with an external or remote voltage source .

Figures below shows the typical connections needed.

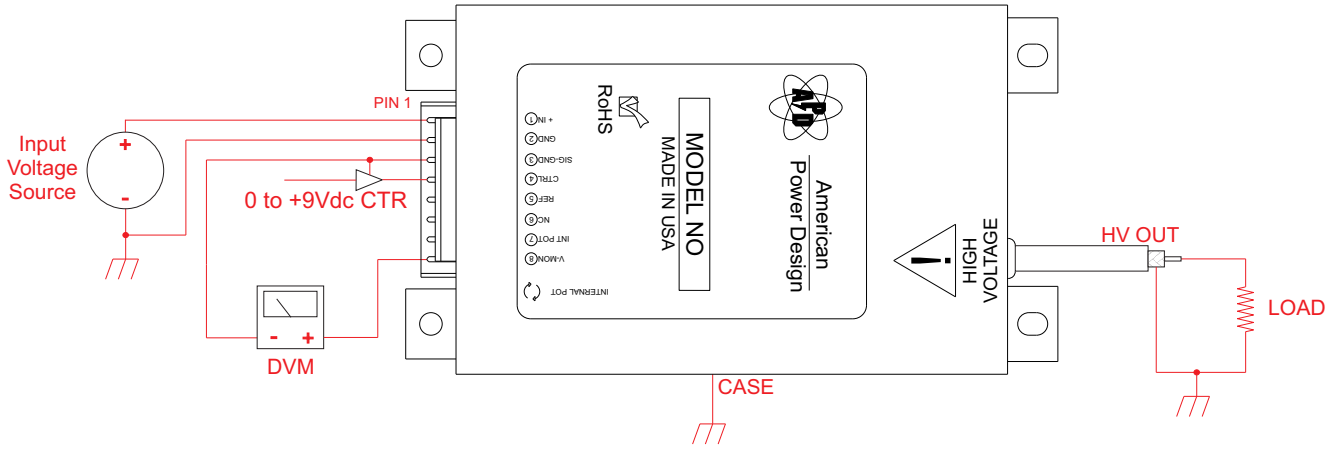

NOTE:

The Voltage Monitor polarity matches the high voltage output polarity

APPLICATION NOTES

CLEANING AGENTS

In order to avoid possible damage, any penetration of cleaning fluids must be prevented, since the power supplies are not hermetically sealed.

NUCLEAR AND MEDICAL APPLICATIONS

American Power Design products are not designed, intended for use in, or authorized for use as critical components in life support systems, equipment used in hazardous environments, or nuclear control systems without the express written consent of American Power Design, Inc.

TECHNICAL REVISIONS

The appearance of products, including safety agency certifications pictured on labels, may change depending on the date manufactured. Specifications are subject to change without notice.

SAFETY REQUIREMENTS

The converters are designed to meet North American and International safety regulatory requirements per UL 60950-1/CSA 22.2 No. 60950-1-07 Second Edition, IEC 60950-1: 2005, and EN 60950-1:2006. Basic Insulation is provided between input and output. To comply with safety agencies requirements, an input line fuse must be used external to the converter. The table below provides the recommended fuse rating for use with this family of products.

Input Voltage Range	Fuse Rating
24V - 30Vdc	1A

If one input fuse is used for a group of modules, the maximum fuse rating should not exceed 10A.

WARRANTY

All products manufactured by American Power Design, Inc. (APD) are warranted to be free of defects due to material or workmanship for a period of one year from date of shipment. At our option, APD will repair or replace any non-conforming product.
APD expressly disclaims any liability for consequential or incidental damages resulting from the use or misuse of its products by the purchaser or others.
This warranty is in lieu of all warranties expressed or implied, including the warranties of merchantability. No other warranties, obligations, or liabilities are expressed or implied.
All products being returned for repair require a return material authorization(RMA) assigned by APD prior to return shipment.

American Power Design, Inc.

"The best high voltage design solution"

RoHS

Q4 SERIES 4 WATT HIGH PRECISION REGULATED HV DC/DC CONVERTERS

FEATURES

- Customer Selects Output Voltage
- Fully Regulated Outputs to 5000 Vdc
- 0-100% Programable + or - Output
- High Stability (<0.005%/°C)
- Line / Load Regulation < 0.001%
- Ultra Low Output Noise & EMI/RFI
- Onboard Reference & Output Monitor
- Continuous Short Circuit Protection

The Q4 Series high voltage DC/DC converter offers a 100% programable high voltage output using a 0 to 9Vdc analog signal. Their exceptionally low noise, regulation, and stability make them ideally suited for applications including: Photomultiplier tubes, MASS Spectrometers, Radiation Counters and Ultrasonic Transducers

ELECTRICAL SPECIFICATIONS

Input Voltage Range	24V to 30Vdc
Output Voltage Accuracy	< 1%
Line Regulation	<0.001%
Load Regulation	<0.001%
Output Ripple	See Table
Onboard Precision Reference	9Vdc @ 10mA
Programming Voltage	0 to +9Vdc @ <100uA
Programming Linearity	<1%
Input Filter	Low ESR Capacitor
Reverse Input Protection	50Vdc
Efficiency	> 50%
Short Circuit Protection	Continuous
Switching Frequency	150 - 250 kHz
Programming Voltage Shutdown	> 9.2Vdc
Response Time	<500 ms (Full Load, full scale response)
Output Voltage Monitor	<1%

GENERAL SPECIFICATIONS

Stability	< 0.005% / Hr.
Temp. Stability	+/- 0.005%/°C
Temp. (Operating , Case)	0 to +50°C
Temp. (Storage)	-40 to +85°C
Humidity	20 to 85% (Non-Condensing)
Thermal Shock Limit	1°C / 10 Seconds
EMI/RFI	Six Sided Shield
Derating	None
Cooling	Free-Air Convection
Certifications	Designed to meet UL60950

PHYSICAL SPECIFICATIONS

Dimensions & Weight	5.12 x 3.54 x 1.1 inches @ 5.4 Oz
Dimensions & Weight	5.75 x 3.88 x 1.63 inches @ 6.2 Oz
Case Material	Coated Aluminum

NOTE: *Specifications are at the maximum rated output after a 30 minute warm-up period unless otherwise specified.*

Tel (888) 894-4446 WWW.APOWERDESIGN.COM Fax (603) 898-6534

Q4 SERIES 4 WATT HIGH PRECISION REGULATED HV DC/DC CONVERTERS

REPRESENTATIVE MODEL LISTING

MODEL NUMBER		OUTPUT SPECIFICATIONS					SWITCHING FREQUENCY
Non-RoHs	RoHs	VOLTAGE	RIPPLE	CURRENT	REGULATION		
					LOAD	LINE	
Q4-P50	Q4-P50/Y	0V to +500Vdc	<0.001% (5mV p-p)	0 - 8mA	<0.001%	<0.001%	250 kHz
Q4-N50	Q4-N50/Y	0V to -500Vdc	<0.001% (5mV p-p)	0 - 8mA	<0.001%	<0.001%	250 kHz
Q4-P100	Q4-P100/Y	0V to +1000Vdc	<0.0002% (2mV p-p)	0 - 4mA	<0.001%	<0.001%	250 kHz
Q4-N100	Q4-N100/Y	0V to -1000Vdc	<0.0002% (2mV p-p)	0 - 4mA	<0.001%	<0.001%	250 kHz
Q4-P150	Q4-P150/Y	0V to +1500Vdc	<0.0013% (2mV p-p)	0 - 2.6mA	<0.001%	<0.001%	250 kHz
Q4-N150	Q4-N150/Y	0V to -1500Vdc	<0.0013% (2mV p-p)	0 - 2.6mA	<0.001%	<0.001%	250 kHz
Q4-P200	Q4-P200/Y	0V to +2000Vdc	<0.0001% (2mV p-p)	0 - 2mA	<0.001%	<0.001%	250 kHz
Q4-N200	Q4-N200/Y	0V to -2000Vdc	<0.0001% (2mV p-p)	0 - 2mA	<0.001%	<0.001%	250 kHz
Q4-P300	Q4-P300/Y	0V to +3000Vdc	<0.0001% (3mV p-p)	0 - 1.3mA	<0.001%	<0.001%	200 kHz
Q4-N300	Q4-N300/Y	0V to -3000Vdc	<0.0001% (3mV p-p)	0 - 1.3mA	<0.001%	<0.001%	200 kHz
Q4-P500	Q4-P500/Y	0V to +5000Vdc	<0.0002% (10mV p-p)	0 - 0.8mA	<0.001%	<0.001%	200 kHz
Q4-N500	Q4-N500/Y	0V to -5000Vdc	<0.0002% (10mV p-p)	0 - 0.8mA	<0.001%	<0.001%	200 kHz

Q4-P100/A/Y

- Q4 — Product Family
- 100 — Total Output Power
- P — Positive/Negative Output
- 100 — Customer Selects Output Voltage *
- A — Alternate Edge Card Configuration
- /Y — RoHS Compliance

***ACTUAL OUTPUT VOLTAGE IS 10X**

***Customer Selects Output Voltage ***

The Q4 Series are designed such that the customer may order any output voltage (positive or negative) from 500Vdc to 5000Vdc at no additional charge.

Q4 SERIES 4 WATT HIGH PRECISION REGULATED HV DC/DC CONVERTERS

STANDARD CONFIGURATION

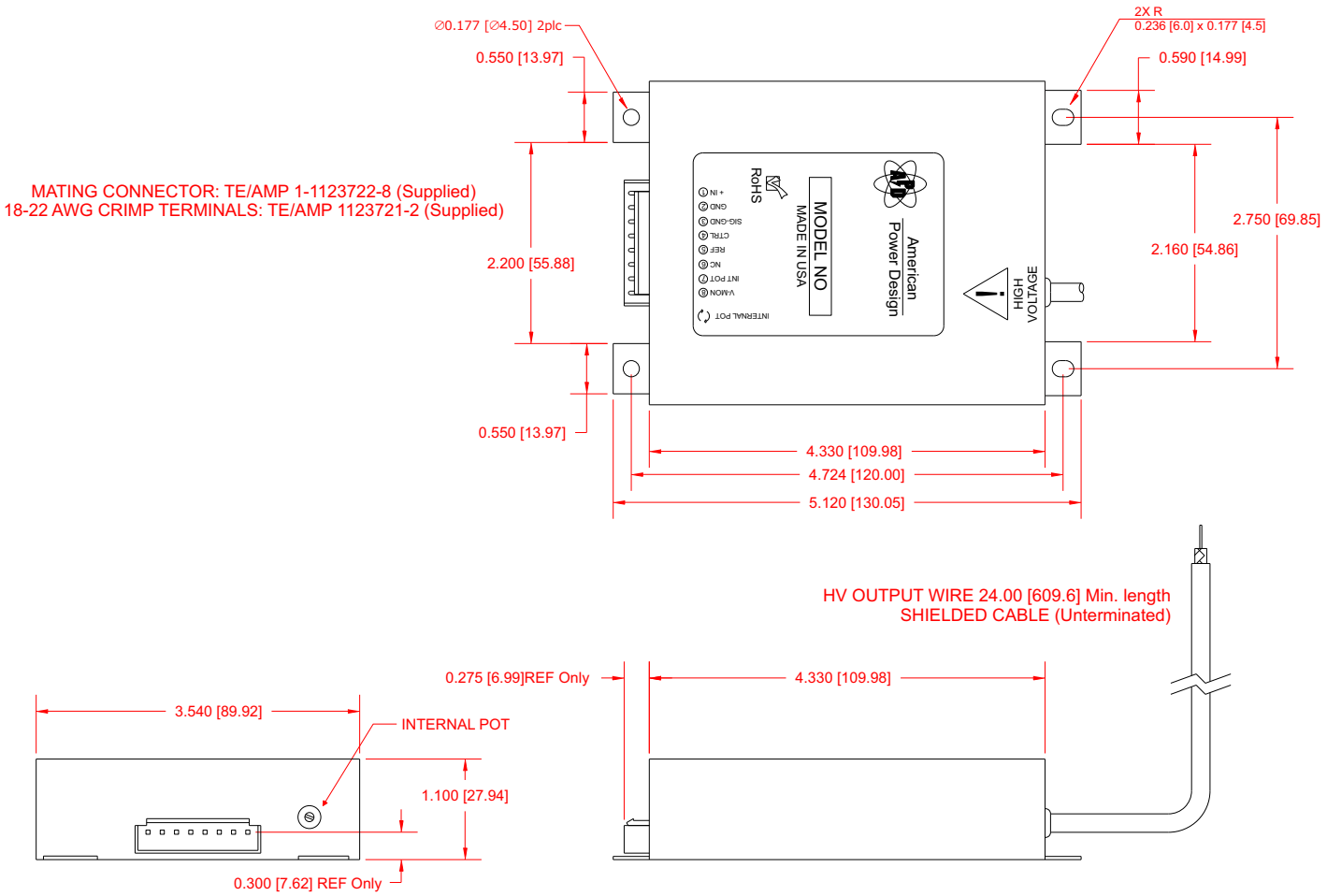

PIN #	FUNCTION	PIN #	FUNCTION
1	+ IN	5	V REFERENCE
2	GND	6	NC
3	SIG-GND	7	INTERNAL POT
4	CONTROL	8	V MONITOR

Dimensions are in Inches
[Metric equivalents in brackets]

Q4 SERIES 4 WATT HIGH PRECISION REGULATED HV DC/DC CONVERTERS

ALTERNATE EDGE CARD CONFIGURATION /A

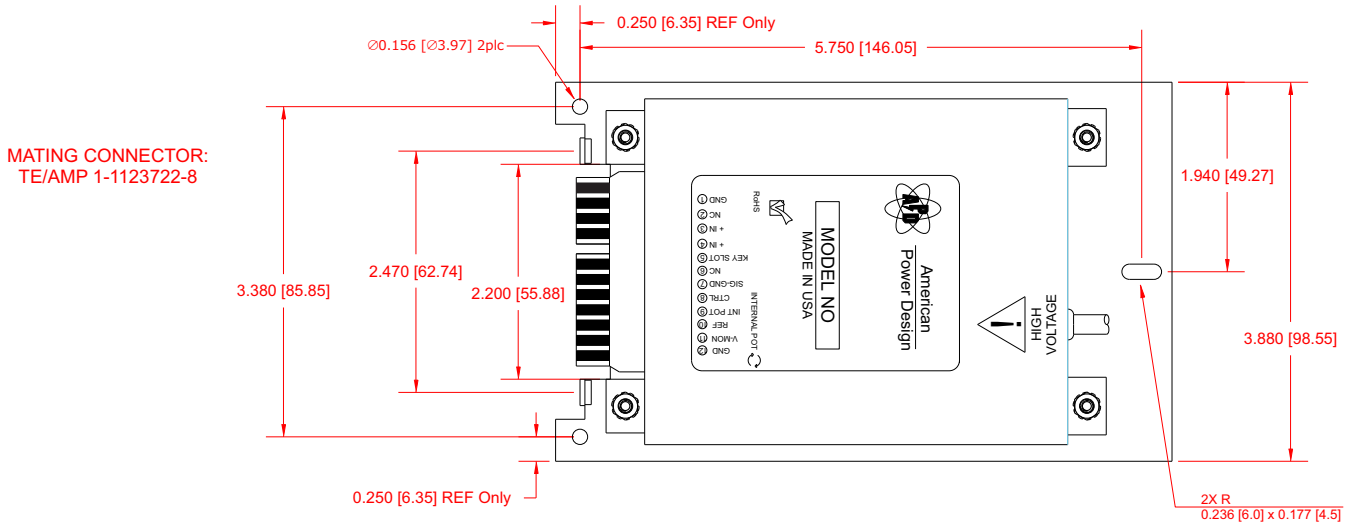

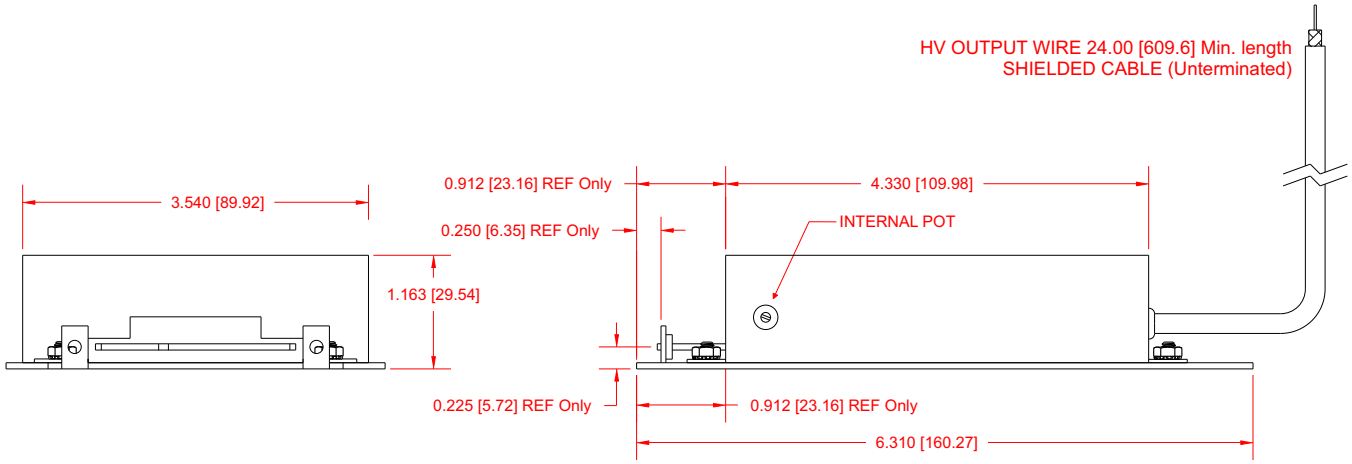

PIN #	FUNCTION	PIN #	FUNCTION
1	GND	7	SIG-GND
2	NC	8	CONTROL
3	+ IN	9	INTERNAL POT
4	+ IN	10	V REFERENCE
5	KEY SLOT	11	V MONITOR
6	NC	12	GND

Dimensions are in Inches
[Metric equivalents in brackets]

Q4 SERIES 4 WATT HIGH PRECISION REGULATED HV DC/DC CONVERTERS

APPLICATION NOTES

INRUSH CURRENT

The inrush current of the Q4 Series has been kept as low as possible. However, a series resistor may be inserted in the input line to limit this current further.

REVERSE INPUT PROTECTION

The Q4 Series is equipped with a diode placed in series with the + Input of the converter. This allows current to flow only if the correct polarity is applied.

SHORT CIRCUIT PROTECTION

The Q4 Series is equipped with short circuit protection. The converter will fold-back the input power whenever a short circuit is applied to its output and automatically recover after the overload condition is removed.

OUTPUT VOLTAGE MONITOR

The Q4 is equipped with an output voltage monitor circuit. The voltage monitor is a precision resistor network that provides a low voltage output proportional to the converters output voltage.

The table below provides the voltage ratio and impedance for a given output voltage.

Output Voltage	Monitor Voltage	Impedance
0 to 500Vdc	0 to 5Vdc	50k
0 to 1000Vdc	0 to 1Vdc	10k
0 to 1500Vdc	0 to 1.5Vdc	25k
0 to 2000Vdc	0 to 2Vdc	25k
0 to 3000Vdc	0 to 3Vdc	30k
0 to 5000Vdc	0 to 5Vdc	100k

PROGRAMMING VOLTAGE

A 0V to +9V signal will program the power supply for 0 to 100% rated output voltage. The input impedance for this control pin is typically 100KΩ. If the programming signal exceeds 9.2Vdc the converter will shutdown and automatically recover when the programming signal returns to within normal operating range.

OUTPUT VOLTAGE TRACKING

The output voltage tracks the Control pin within 1% from 1% to 100% of output voltage.

Figure below show a typical plot of both the actual and calculated output voltage as a function of control voltage.

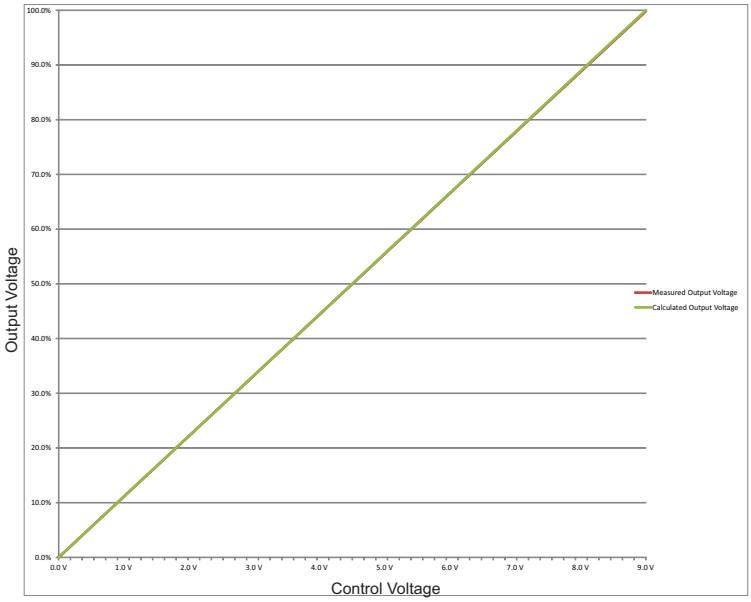

Operating Conditions:

Nominal Input Voltage = Fixed
Output Load = Resistive (fixed at full output current @ 100% output voltage)

Q4 SERIES 4 WATT HIGH PRECISION REGULATED HV DC/DC CONVERTERS

APPLICATION NOTES

INTERNAL POTENTIOMETER

The Q4 Series is equipped with a internal multi-turn potentiometer and can be utilized to control the output voltage.

Figures below shows the typical connections needed.

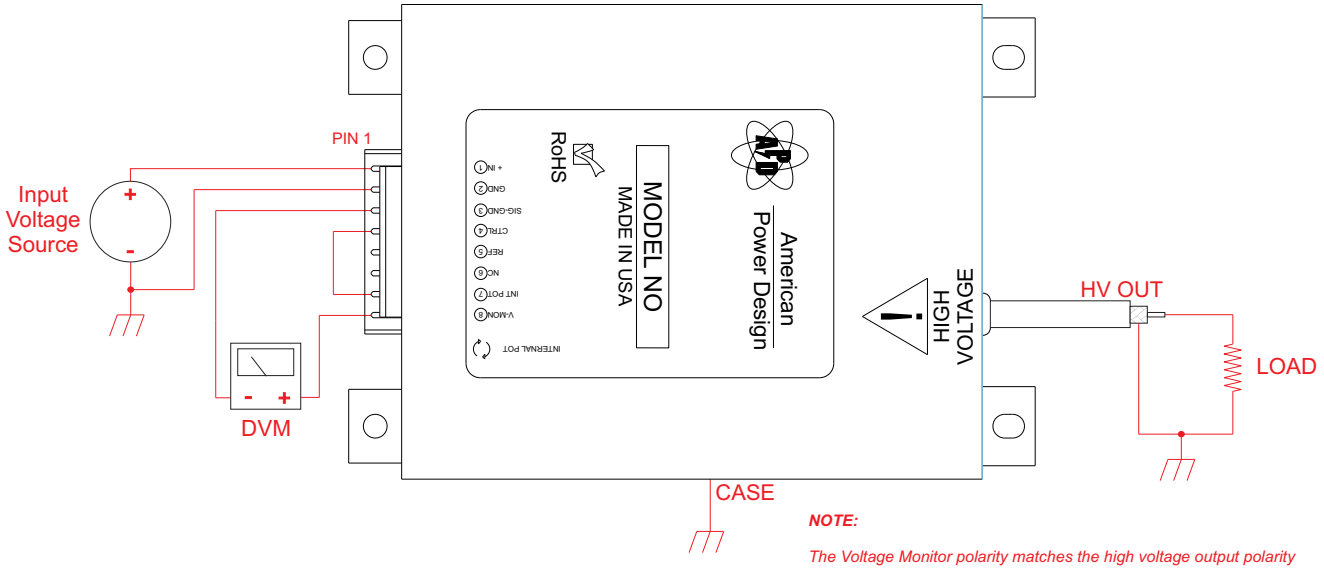

NOTE:

The Voltage Monitor polarity matches the high voltage output polarity

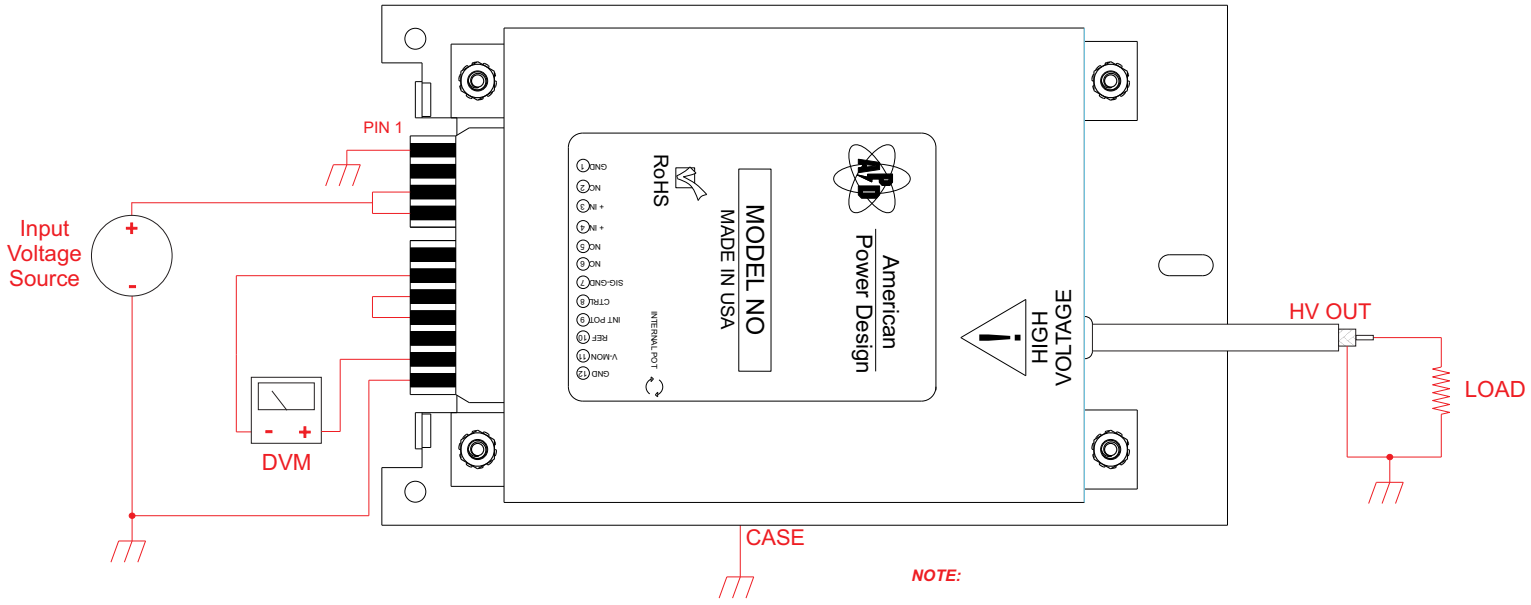

NOTE:

The Voltage Monitor polarity matches the high voltage output polarity

Q4 SERIES 4 WATT HIGH PRECISION REGULATED HV DC/DC CONVERTERS

APPLICATION NOTES

EXTERNAL / REMOTE POTENTIOMETER

The output voltage of the Q4 Series can be controlled with and external or remote potentiometer .

Figures below shows the typical connections needed.

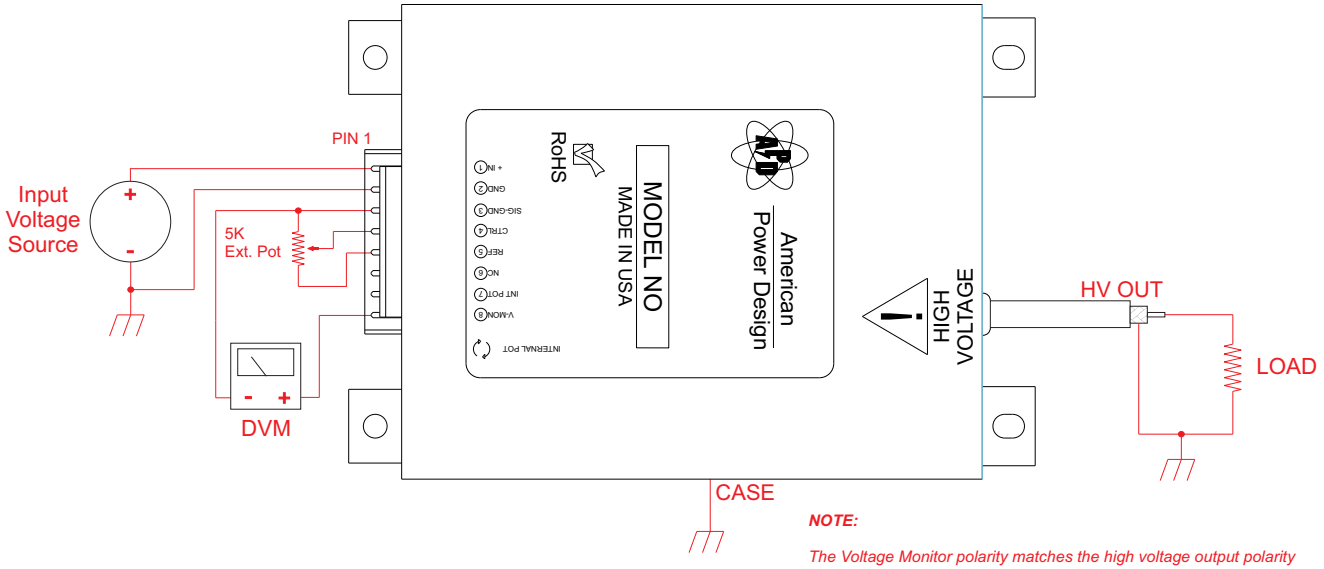

NOTE:

The Voltage Monitor polarity matches the high voltage output polarity

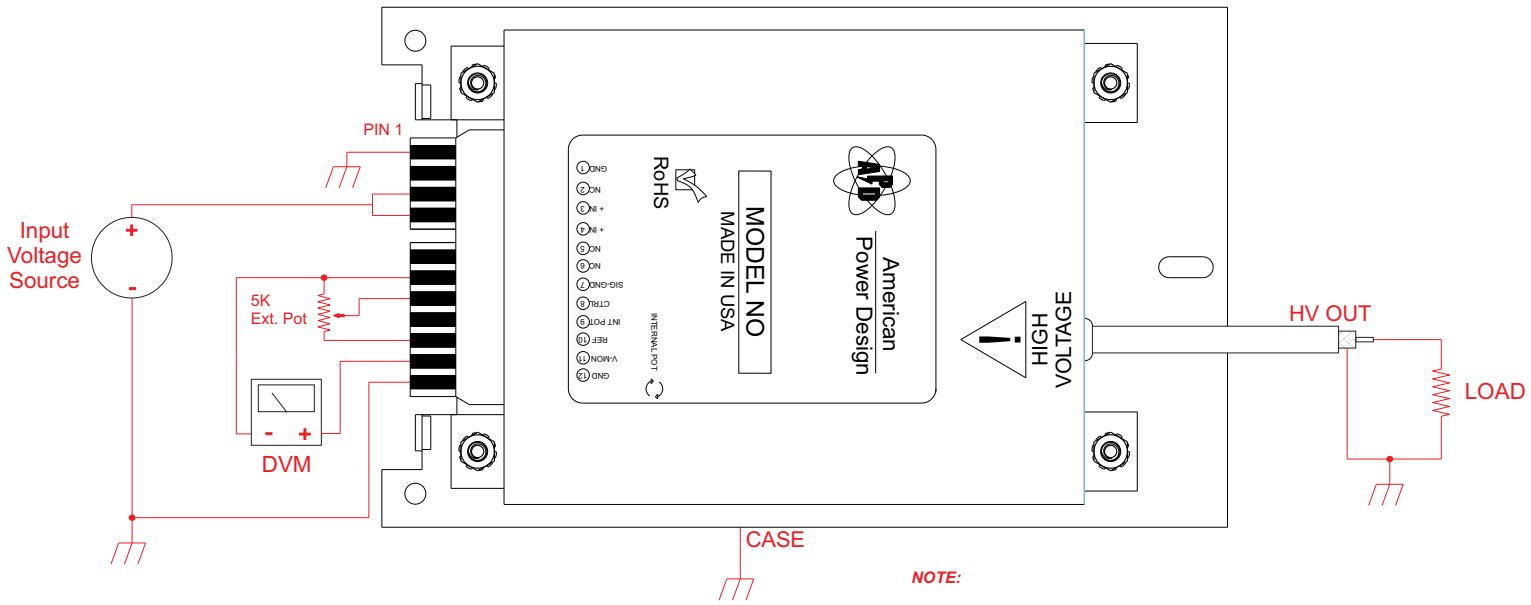

NOTE:

The Voltage Monitor polarity matches the high voltage output polarity

Q4 SERIES 4 WATT HIGH PRECISION REGULATED HV DC/DC CONVERTERS

APPLICATION NOTES

EXTERNAL / REMOTE VOLTAGE SOURCE

The output voltage of the Q4 Series can be controlled with an external or remote voltage source .

Figures below shows the typical connections needed.

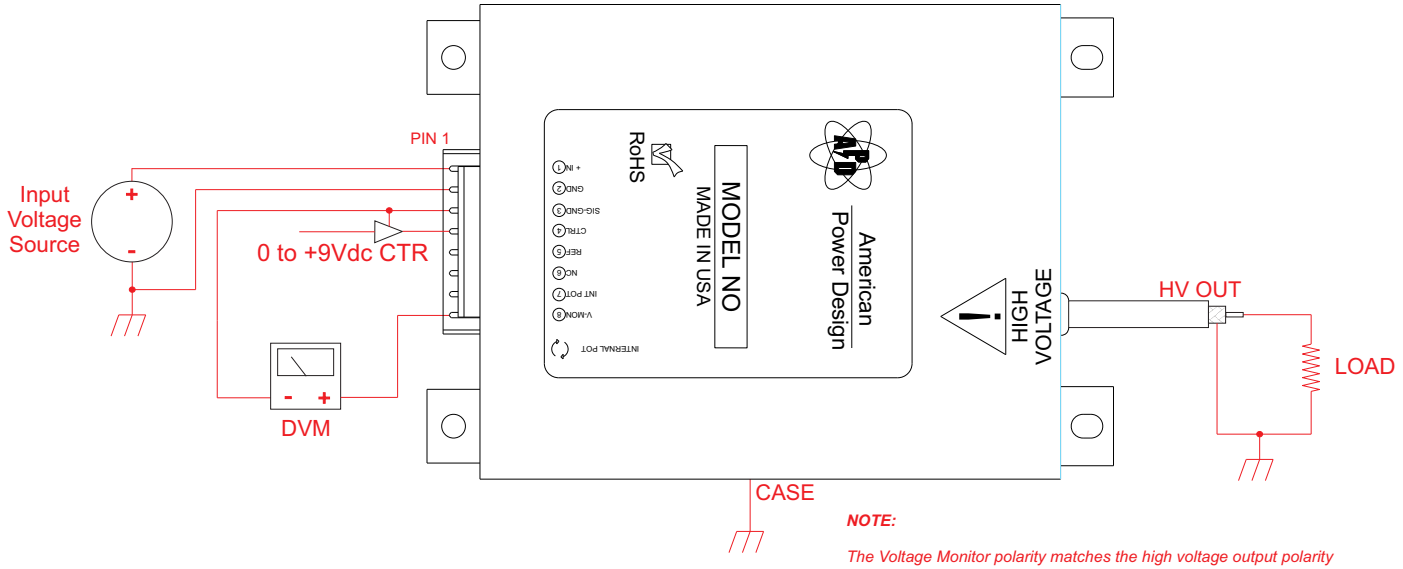

NOTE:

The Voltage Monitor polarity matches the high voltage output polarity

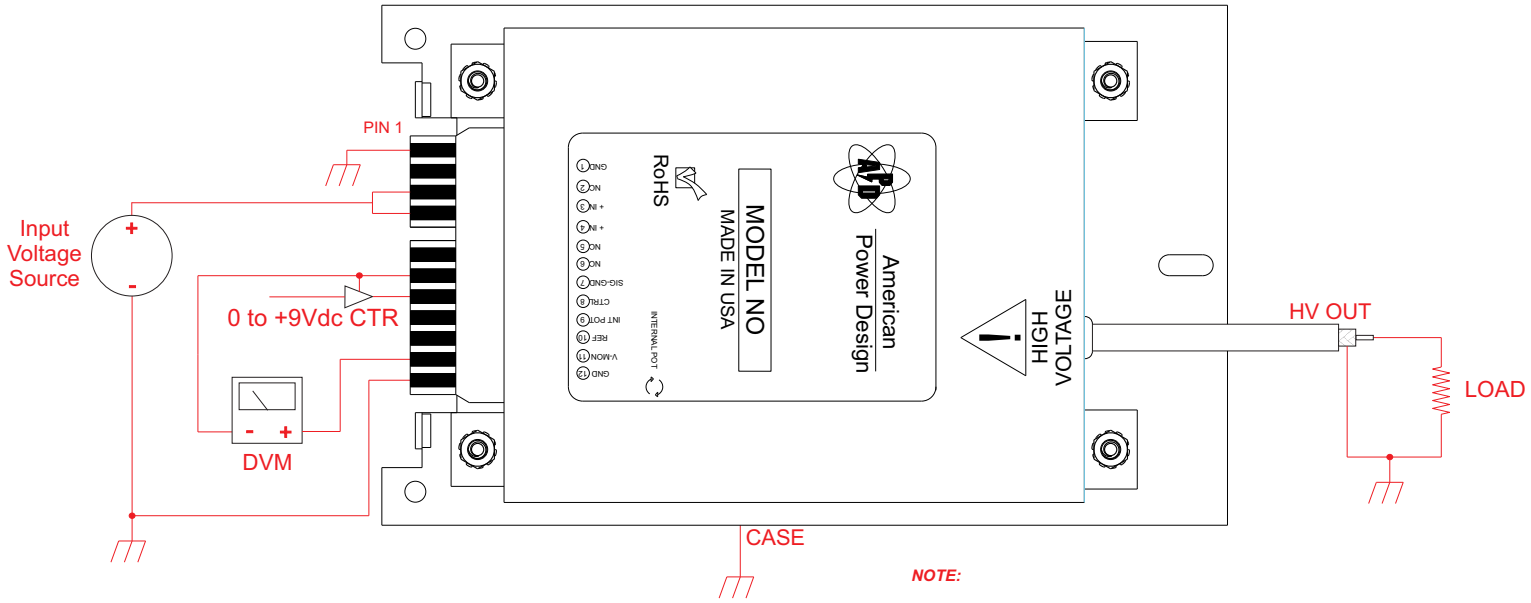

NOTE:

The Voltage Monitor polarity matches the high voltage output polarity

APPLICATION NOTES

CLEANING AGENTS

In order to avoid possible damage, any penetration of cleaning fluids must be prevented, since the power supplies are not hermetically sealed.

NUCLEAR AND MEDICAL APPLICATIONS

American Power Design products are not designed, intended for use in, or authorized for use as critical components in life support systems, equipment used in hazardous environments, or nuclear control systems without the express written consent of American Power Design, Inc.

TECHNICAL REVISIONS

The appearance of products, including safety agency certifications pictured on labels, may change depending on the date manufactured. Specifications are subject to change without notice.

SAFETY REQUIREMENTS

The converters are designed to meet North American and International safety regulatory requirements per UL 60950-1/CSA 22.2 No. 60950-1-07 Second Edition, IEC 60950-1: 2005, and EN 60950-1:2006. Basic Insulation is provided between input and output. To comply with safety agencies requirements, an input line fuse must be used external to the converter. The table below provides the recommended fuse rating for use with this family of products.

Input Voltage Range	Fuse Rating
24V - 30Vdc	1A

If one input fuse is used for a group of modules, the maximum fuse rating should not exceed 10A.

WARRANTY

All products manufactured by American Power Design, Inc. (APD) are warranted to be free of defects due to material or workmanship for a period of one year from date of shipment. At our option, APD will repair or replace any non-conforming product.
APD expressly disclaims any liability for consequential or incidental damages resulting from the use or misuse of its products by the purchaser or others.
This warranty is in lieu of all warranties expressed or implied, including the warranties of merchantability. No other warranties, obligations, or liabilities are expressed or implied.
All products being returned for repair require a return material authorization(RMA) assigned by APD prior to return shipment.

American Power Design, Inc.

"The best high voltage design solution"

S1 SERIES MINIATURE HIGH VOLTAGE DC/DC CONVERTERS

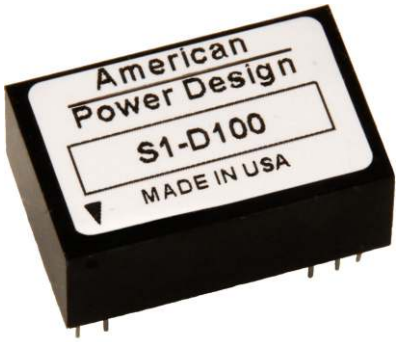

FEATURES

*** Customer Selects Output Voltages**

* Voltages up to 500Vdc
* Wide Input Range (9-36Vdc)
* Efficiency 60% (typ.)
* 500 Vdc Isolation
* 24 PIN DIP Package
* 52 kHz Switching Frequency
* Single or Dual Outputs

The S1 Series of DC/DC converters accepts an ultra wide input range of 9-36 Vdc, delivering a 500 Vdc isolated high voltage output. All models feature 24-pin dip compatible configuration, continuous short circuit protection, and a low ESR input capacitor.

ELECTRICAL SPECIFICATIONS

Voltage Accuracy	+/- 5%
Input Regulation	+/- 1% / 20% of Vin
Load Regulation	(20% to full load) +/-5%
Output Ripple	< 0.3%
Peak Start-up Current	2A
Short Circuit Protection	Input Current Foldback
Input Filter	Low ESR Capacitor
Efficiency	50% (typ.)
Switching Frequency	52 kHz
Isolation	500 Vdc

GENERAL SPECIFICATIONS

Temp. Stability	+/- 0.02%/°C
Temp. (Operating,Case)	-25 to +70°C
Temp. (Storage)	-40 to +100°C
Temp. Derating	None
Cooling	Free-Air Convection

** All models designed to meet UL 60950*
** For RoHS Compliant part, add suffix /Y*

PHYSICAL SPECIFICATIONS

Dimensions	0.8 x 1.25 x 0.52 inches
Weight	0.7 Oz
Case Material	Black Plastic

Tel (888) 894-4446 WWW.APOWERDESIGN.COM Fax (603) 898-6534

S1 SERIES MINIATURE HIGH VOLTAGE DC/DC CONVERTERS

REPRESENTATIVE MODEL LISTING

MODEL NUMBER	INPUT SPECIFICATIONS		OUTPUT SPECIFICATIONS			
			+ OUTPUT		- OUTPUT	
	VOLTAGE	CURRENT	VOLTAGE	CURRENT	VOLTAGE	CURRENT
S1-S50	9V - 36V	0.18A - 0.05A	50V	20ma	N/A	N/A
S1-D50	9V - 36V	0.18A - 0.05A	50V	10ma	50v	10ma
S1-S75	9V - 36V	0.18A - 0.05A	75V	13ma	N/A	N/A
S1-D75	9V - 36V	0.18A - 0.05A	75V	6.5ma	75v	6.5ma
S1-S100	9V - 36V	0.18A - 0.05A	100V	10ma	N/A	N/A
S1-D100	9V - 36V	0.18A - 0.05A	100V	5ma	100v	5ma
S1-S150	9V - 36V	0.18A - 0.05A	150V	6.6ma	N/A	N/A
S1-D150	9V - 36V	0.18A - 0.05A	150V	3.3ma	150v	3.3ma
S1-S200	9V - 36V	0.18A - 0.05A	200V	5ma	N/A	N/A
S1-D200	9V - 36V	0.18A - 0.05A	200V	2.5ma	200v	2.5ma
S1-S250	9V - 36V	0.18A - 0.05A	250V	4ma	N/A	N/A
S1-D250	9V - 36V	0.18A - 0.05A	250V	2ma	250v	2ma
S1-S300	9V - 36V	0.18A - 0.05A	300V	3.3ma	N/A	N/A
S1-S350	9V - 36V	0.18A - 0.05A	350V	2.8ma	N/A	N/A
S1-S400	9V - 36V	0.18A - 0.05A	400V	2.5ma	N/A	N/A
S1-S500	9V - 36V	0.18A - 0.05A	500V	2ma	N/A	N/A

** RoHS Compliant add suffix /Y*

PART NUMBERING SYSTEM

S1-D125/Y

- S1 — Product Series
- D — Output Power
- D — Single/Dual
- 125 — Output Voltage(s)
- Y — RoHS Compliant

Customer Selects Output Voltages

S1 SERIES MINIATURE HIGH VOLTAGE DC/DC CONVERTERS

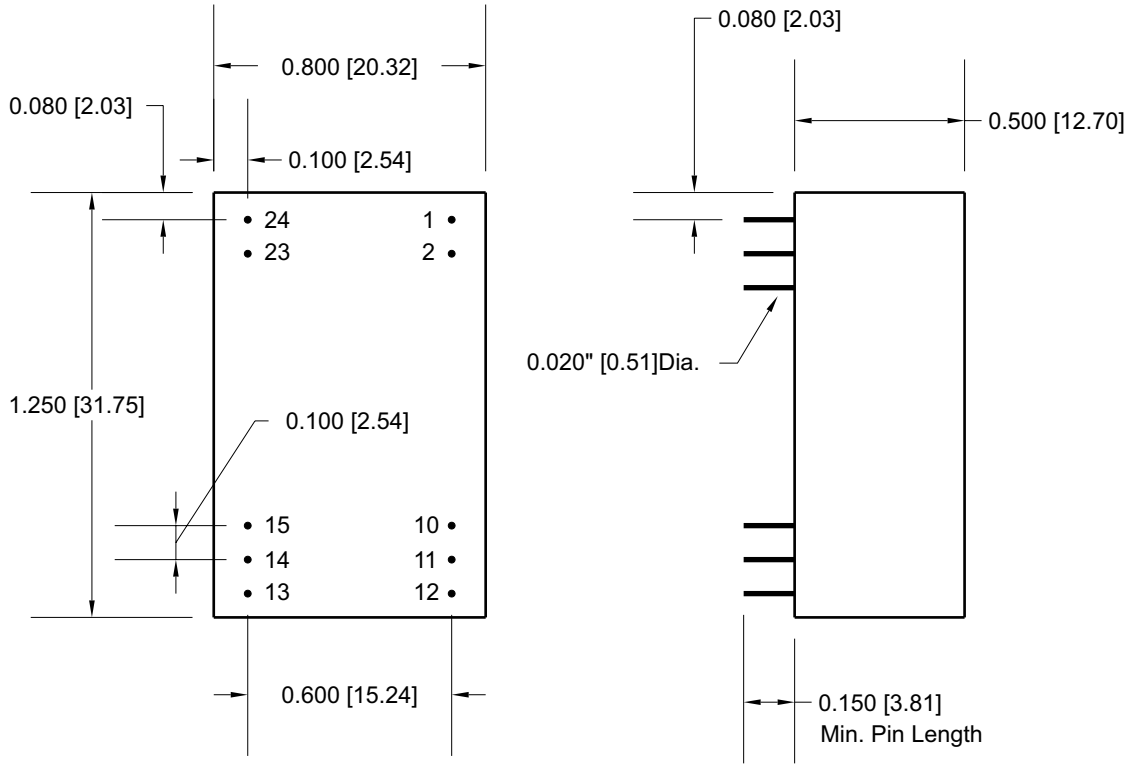

(Bottom View)

Pin #	Single	Dual
1 & 24	+ INPUT	+ INPUT
2 & 23	- INPUT	- INPUT
10 & 15	+ OUTPUT	+ OUTPUT
11 & 14	N/C	COM
12 & 13	- OUTPUT	- OUTPUT

Dimensions are in Inches
[Metric equivalents in brackets]

American Power Design, Inc.

"The best high voltage design solution"

S3 SERIES MINIATURE HIGH VOLTAGE DC/DC CONVERTERS

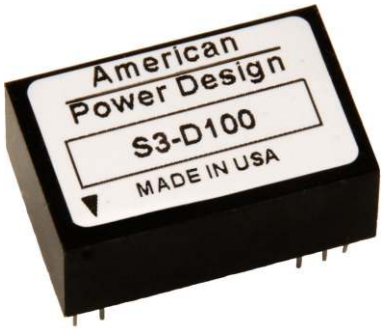

FEATURES

*** Customer Selects Output Voltages**

* Voltages up to 500Vdc
* Wide Input Range (9-36 Vdc)
* Efficiency 70% (typ.)
* 500 Vdc Isolation
* 24 PIN DIP Package
* 52 kHz Switching Frequency
* Single or Dual Outputs

The S3 Series of DC/DC converters accepts an ultra wide input range of 9-36 Vdc, delivering a 500 Vdc isolated high voltage output. All models feature a 24-pin dip compatible configuration , continuous short circuit protection, and a low ESR input capacitor.

ELECTRICAL SPECIFICATIONS

Voltage Accuracy	+/- 5%
Input Regulation	+/- 1% / 20% of Vin
Load Regulation	(20% to full load) +/-4%
Output Ripple	< 0.3%
Peak Start-up Current	2A
Short Circuit Protection	Input Current Foldback
Input Filter	Low ESR Capacitor
Efficiency	65% (typ.)
Switching Frequency	52 kHz
Isolation	500Vdc

GENERAL SPECIFICATIONS

Temp. Stability	+/- 0.02%/°C
Temp. (Operating,Case)	-25 to +70°C
Temp. (Storage)	-40 to +100°C
Temp. Derating	None
Cooling	Free-Air Convection

** All models designed to meet UL 60950*
** For RoHS Compliant part, add suffix /Y*

PHYSICAL SPECIFICATIONS

Dimensions	0.8 x 1.25 x 0.52 inches
Weight	0.7 Oz
Case Material	Black Plastic

Tel (888) 894-4446 WWW.APOWERDESIGN.COM Fax (603) 898-6534

S3 SERIES MINIATURE HIGH VOLTAGE DC/DC CONVERTERS

REPRESENTATIVE MODEL LISTING

MODEL NUMBER	INPUT SPECIFICATIONS		OUTPUT SPECIFICATIONS			
			+ OUTPUT		- OUTPUT	
	VOLTAGE	CURRENT	VOLTAGE	CURRENT	VOLTAGE	CURRENT
S3-S50	9V - 36V	0.47A - 0.12A	50V	60ma	N/A	N/A
S3-D50	9V - 36V	0.47A - 0.12A	50V	30ma	50v	30ma
S3-S75	9V - 36V	0.47A - 0.12A	75V	40ma	N/A	N/A
S3-D75	9V - 36V	0.47A - 0.12A	75V	20ma	75v	20ma
S3-S100	9V - 36V	0.47A - 0.12A	100V	30ma	N/A	N/A
S3-D100	9V - 36V	0.47A - 0.12A	100V	15ma	100v	15ma
S3-S150	9V - 36V	0.47A - 0.12A	150V	20ma	N/A	N/A
S3-D150	9V - 36V	0.47A - 0.12A	150V	10ma	150v	10ma
S3-S200	9V - 36V	0.48A - 0.13A	200V	15ma	N/A	N/A
S3-D200	9V - 36V	0.48A - 0.13A	200V	7.5ma	200v	7.5ma
S3-S250	9V - 36V	0.48A - 0.13A	250V	12ma	N/A	N/A
S3-D250	9V - 36V	0.48A - 0.13A	250V	6ma	250v	6ma
S3-S300	9V - 36V	0.48A - 0.13A	300V	10ma	N/A	N/A
S3-S350	9V - 36V	0.48A - 0.13A	350V	8ma	N/A	N/A
S3-S400	9V - 36V	0.48A - 0.13A	400V	7.5ma	N/A	N/A
S3-S500	9V - 36V	0.48A - 0.13A	500V	6ma	N/A	N/A

** RoHS Compliant add suffix /Y*

PART NUMBERING SYSTEM

S3-D150/Y

- S3 — Product Series
- D — Output Power
- D — Single/Dual
- 150 — Output Voltage(s)
- /Y — RoHS Compliant

Customer Selects Output Voltages

S3 SERIES MINIATURE HIGH VOLTAGE DC/DC CONVERTERS

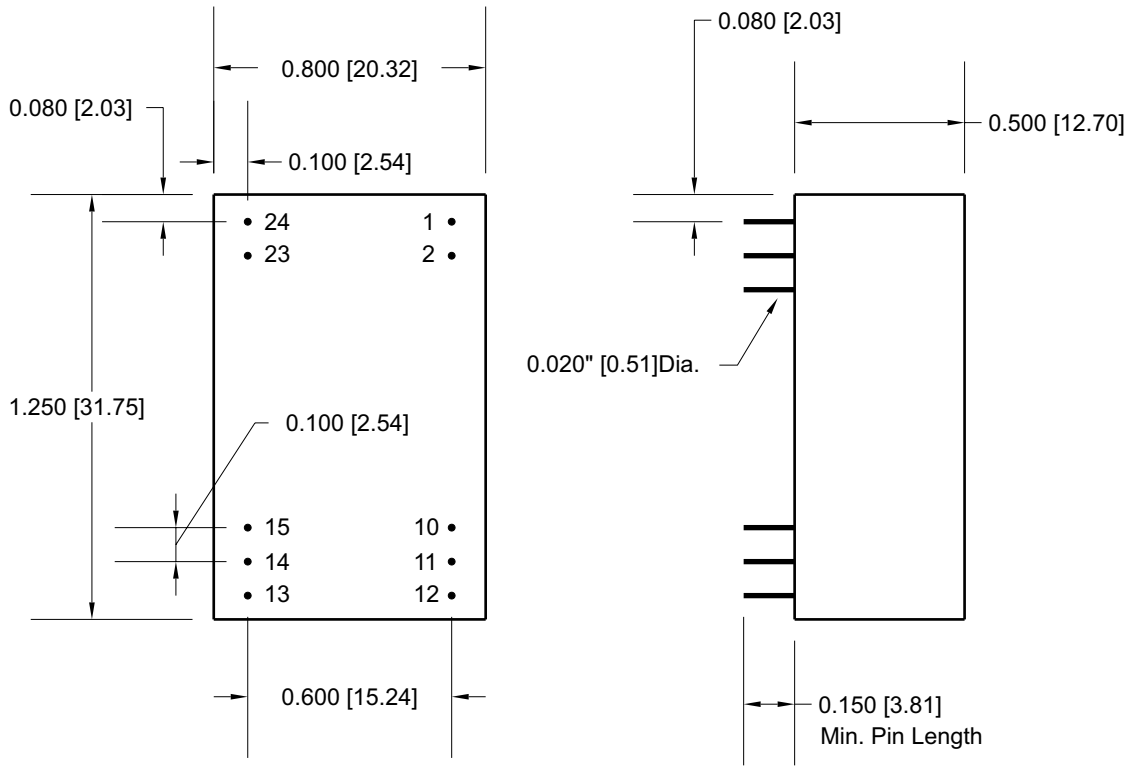

(Bottom View)

Pin #	Single	Dual
1 & 24	+ INPUT	+ INPUT
2 & 23	- INPUT	- INPUT
10 & 15	+ OUTPUT	+ OUTPUT
11 & 14	N/C	COM
12 & 13	- OUTPUT	- OUTPUT

Dimensions are in Inches
[Metric equivalents in brackets]

American Power Design, Inc.

"The best high voltage design solution"

RoHS

S5 SERIES 5 WATT HIGH VOLTAGE DC/DC CONVERTERS

FEATURES

- Customer Selects Output Voltage
- Outputs to 1000 Vdc
- Low Profile
- Single and Dual Outputs
- Ultra Wide Input Ranges
  (9-36Vdc , 20-60Vdc , 36-72Vdc)
- 1000 Vdc Output Isolation
- Continuous Short Circuit Protection

The S5 Series low profile high voltage DC/DC converter offers a 1000 Vdc isolated single or dual high voltage output in a six-sided metal case. Their small size, wide input, and excellent regulation make them ideally suited for applications that demand a high degree of performance All models will tolerate a short circuit indefinitely.

ELECTRICAL SPECIFICATIONS

Voltage Accuracy	+/- 5%
Line Regulation	+/- 1%
Load Regulation	+/- 3% (20% to full Load)
Output Ripple	< 0.5 % P-P
Input Filter	Low ESR Capacitor
Efficiency	80% (typ.)
Short Circuit Protection	Continuous
Switching Frequency	100 kHz
Output Isolation	1000 Vdc
Input / Output Capacitance	< 80pF

GENERAL SPECIFICATIONS

Temp. Stability	+/- 0.02%/°C
Temp. (Operating , Case)	-25 to +70°C
Temp. (Storage)	-40 to +125°C
EMI/RFI	Six Sided Shield
Derating	None
Cooling	Free-Air Convection

PHYSICAL SPECIFICATIONS

Dimensions	1 x 2 x 0.41 inches
Weight	1.2 Oz
Case Material	Nickel Plated Metal *(With Non-Conductive Base Plate)*

Tel (888) 894-4446 WWW.APOWERDESIGN.COM Fax (603) 898-6534

S5 SERIES 5 WATT HIGH VOLTAGE DC/DC CONVERTERS

REPRESENTATIVE MODEL LISTING

OUTPUT SPECIFICATIONS		MODEL NUMBER / INPUT RANGE					
		9-36VDC		20-60VDC		36-72VDC	
VOLTAGE	CURRENT	Non-RoHs	RoHs	Non-RoHs	RoHs	Non-RoHs	RoHs
24 Vdc	208 mA	S5-S24	S5-S24/Y	S5-S24/B	S5-S24/B/Y	S5-S24/C	S5-S24/C/Y
+/- 24 Vdc	104 mA	S5-D24	S5-D24/Y	S5-D24/B	S5-D24/B/Y	S5-D24/C	S5-D24/C/Y
48 Vdc	104 mA	S5-S48	S5-S48/Y	S5-S48/B	S5-S48/B/Y	S5-S48/C	S5-S48/C/Y
+/- 48 Vdc	52 mA	S5-D48	S5-D48/Y	S5-D48/B	S5-D48/B/Y	S5-D48/C	S5-D48/C/Y
100 Vdc	50 mA	S5-S100	S5-S100/Y	S5-S100/B	S5-S100/B/Y	S5-S100/C	S5-S100/C/Y
+/- 100 Vdc	25 mA	S5-D100	S5-D100/Y	S5-D100/B	S5-D100/B/Y	S5-D100/C	S5-D100/C/Y
150 Vdc	33 mA	S5-S150	S5-S150/Y	S5-S150/B	S5-S150/B/Y	S5-S150/C	S5-S150/C/Y
+/- 150 Vdc	16 mA	S5-D150	S5-D150/Y	S5-D150/B	S5-D150/B/Y	S5-D150/C	S5-D150/C/Y
200 Vdc	25 mA	S5-S200	S5-S200/Y	S5-S200/B	S5-S200/B/Y	S5-S200/C	S5-S200/C/Y
+/- 200 Vdc	12 mA	S5-D200	S5-D200/Y	S5-D200/B	S5-D200/B/Y	S5-D200/C	S5-D200/C/Y
300 Vdc	16 mA	S5-S300	S5-S300/Y	S5-S300/B	S5-S300/B/Y	S5-S300/C	S5-S300/C/Y
+/- 300 Vdc	8 mA	S5-D300	S5-D300/Y	S5-D300/B	S5-D300/B/Y	S5-D300/C	S5-D300/C/Y
400 Vdc	12 mA	S5-S400	S5-S400/Y	S5-S400/B	S5-S400/B/Y	S5-S400/C	S5-S400/C/Y
+/- 400 Vdc	6 mA	S5-D400	S5-D400/Y	S5-D400/B	S5-D400/B/Y	S5-D400/C	S5-D400/C/Y
500 Vdc	10 mA	S5-S500	S5-S500/Y	S5-S500/B	S5-S500/B/Y	S5-S500/C	S5-S500/C/Y
+/- 500 Vdc	5 mA	S5-D500	S5-D500/Y	S5-D500/B	S5-D500/B/Y	S5-D500/C	S5-D500/C/Y
600 Vdc	8.3 mA	S5-S600	S5-S600/Y	S5-S600/B	S5-S600/B/Y	S5-S600/C	S5-S600/C/Y
800 Vdc	6.2 mA	S5-S800	S5-S800/Y	S5-S800/B	S5-S800/B/Y	S5-S800/C	S5-S800/C/Y
1000 Vdc	5 mA	S5-S1000	S5-S1000/Y	S5-S1000/B	S5-S1000/B/Y	S5-S1000/C	S5-S1000/C/Y

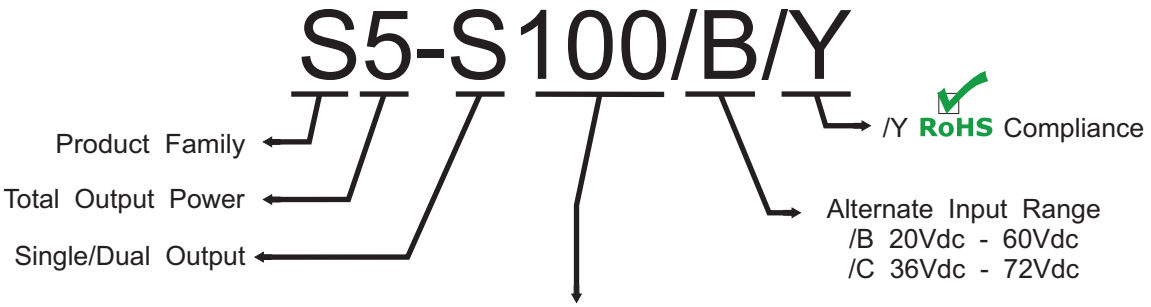

Customer Selects Output Voltage

The S5 Series are designed such that the customer may order any output voltage from 24Vdc to 1000Vdc at no additional charge. (500Vdc Max. for Dual Outputs)

S5 SERIES 5 WATT HIGH VOLTAGE DC/DC CONVERTERS

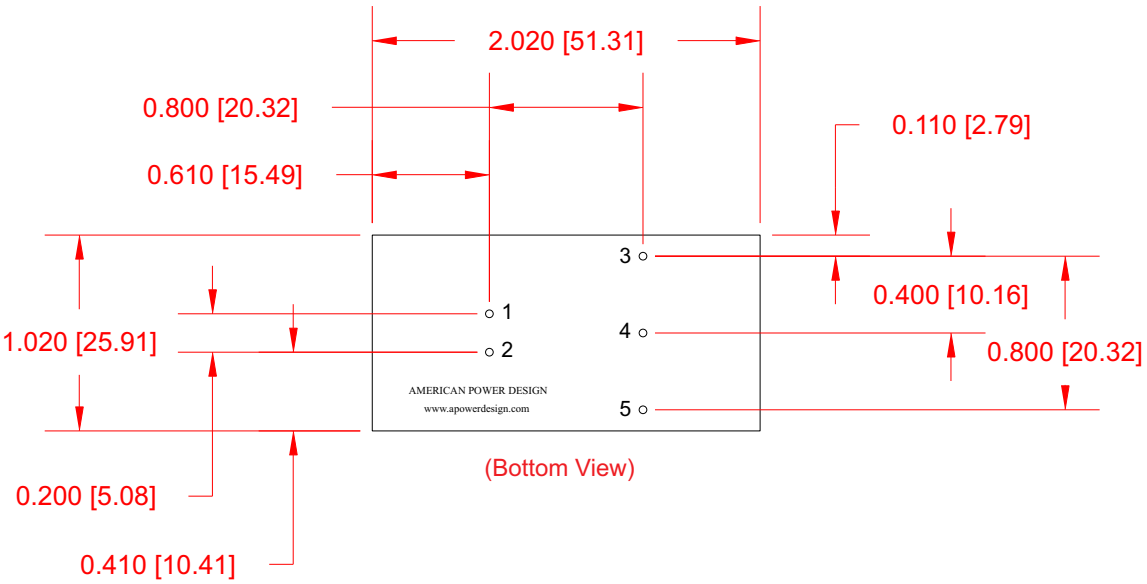

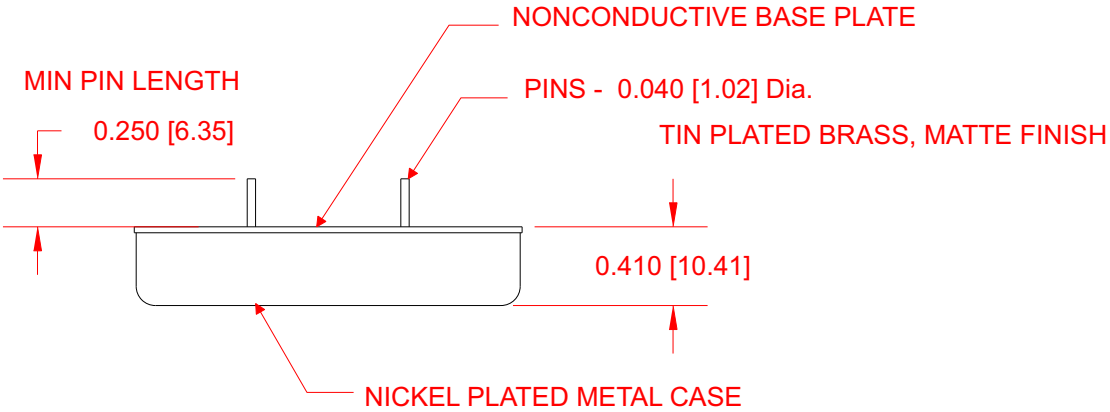

PIN #	SINGLE	DUAL
1	+ Input	+ Input
2	- Input	- Input
3	+Output	+Output
4	No Pin	Com
5	- Output	- Output

Dimensions are in Inches
[Metric equivalents in brackets]

S5 SERIES 5 WATT HIGH VOLTAGE DC/DC CONVERTERS

APPLICATION NOTES

INPUT AND OUTPUT IMPEDANCE

The S5 Series of power converters have been designed to be stable with no external capacitors when used in low inductance input and output circuits. However, in some applications, the inductance associated with the distribution from the power source to the input of the converter can affect the stability of the converter. The addition of a 100 µF electrolytic capacitor with an ESR <1 Ohm across the input helps ensure stability of the converter. In many applications, the user has to use decoupling capacitance at the load.

SHORT CIRCUIT PROTECTION

The S5 Series is equipped with short circuit protection. The converter will fold-back the input power whenever a short circuit is applied to its output and automatically recover after the overload condition is removed.

ISOLATION

The output of the S5 Series is galvanically isolated from both the input and case, capacitance is < 80pF and resistance is > 10G Ohm. The converters case is connected directly to -In to aid in reducing unwanted noise.

RIPPLE AND NOISE

Figure below shows a typical output voltage ripple waveform, measured at full rated load current with no additional output filtering. External low ESR capacitors may be added across output to further reduce ripple.

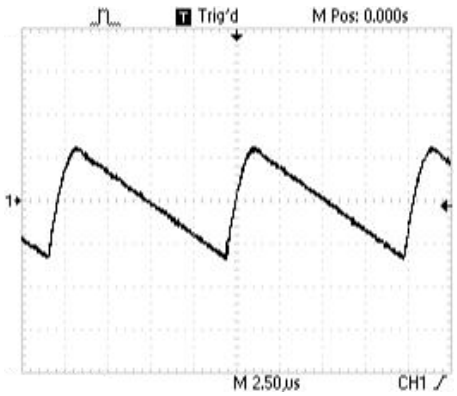

STARTUP TRANSIENT

Figure below shows a typical output voltage during turn-on, measured at 20% load current with no additional output filtering.

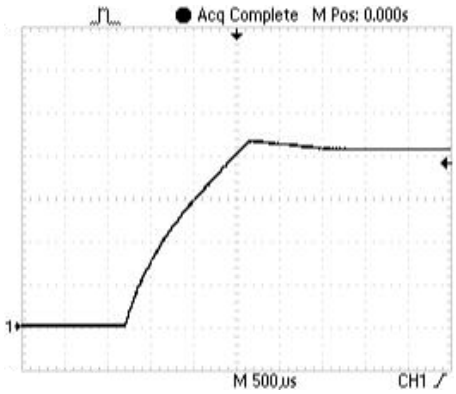

Figure below shows a typical output voltage during turn-on, measured at full rated load current with no additional output filtering.

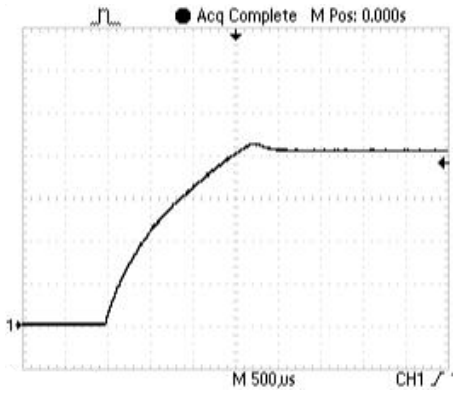

S5 SERIES 5 WATT HIGH VOLTAGE DC/DC CONVERTERS

APPLICATION NOTES

INRUSH CURRENT

The inrush current of the S5 Series has been kept as low as possible. However, a series resistor may be inserted in the input line to limit this current further.

LOAD TRANSIENT

Figure below shows a typical output voltage response, measured during a transition from full rated load current to 20% load current with no additional output filtering.

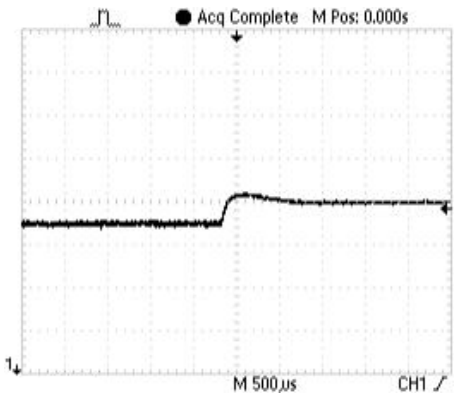

Figure below shows a typical output voltage response, measured during a transition from 20% load current to full rated load current with no additional output filtering.

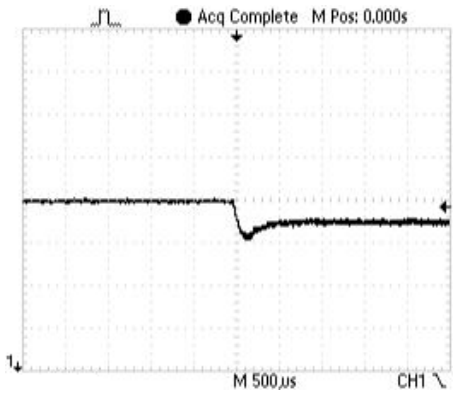

CONNECTION IN PARALLEL

The figures below show how to connect both single and dual outputs of several units with equal nominal output voltage in parallel.

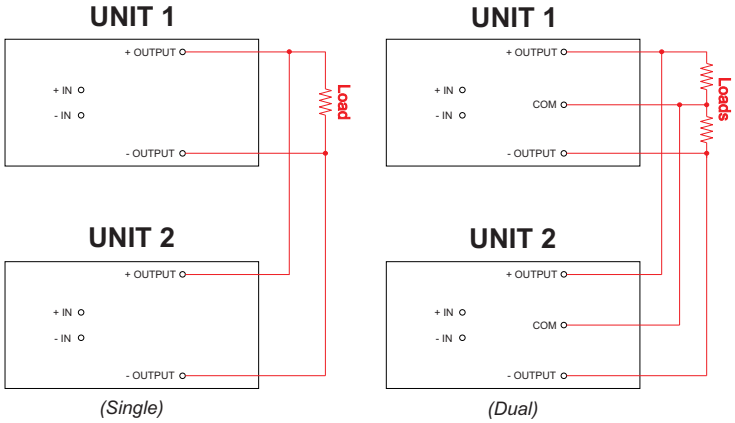

CONNECTION IN SERIES

Figures below show how to connect multiple outputs in series with the use of shunt diodes, taking into consideration that the highest achieved output voltage should remain below the rated isolation voltage.

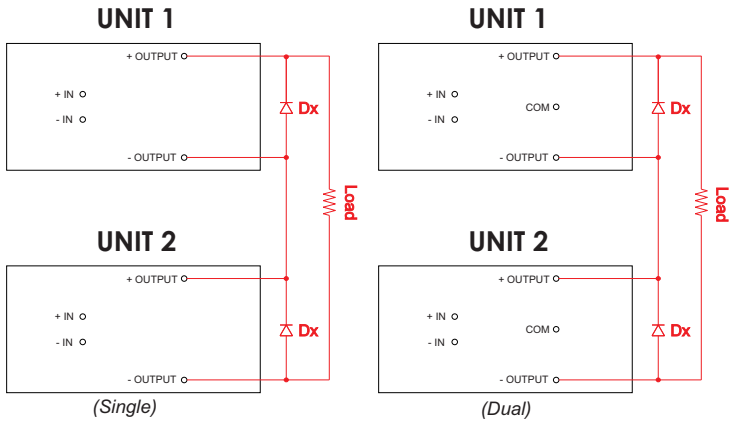

NOTE:
The ratings of Dx should be 1.5 times the maximum current and voltage expected in each branch.

S5 SERIES 5 WATT HIGH VOLTAGE DC/DC CONVERTERS

APPLICATION NOTES

CLEANING AGENTS

In order to avoid possible damage, any penetration of cleaning fluids must be prevented, since the power supplies are not hermetically sealed.

NUCLEAR AND MEDICAL APPLICATIONS

American Power Design products are not designed, intended for use in, or authorized for use as critical components in life support systems, equipment used in hazardous environments, or nuclear control systems without the express written consent of American Power Design, Inc.

TECHNICAL REVISIONS

The appearance of products, including safety agency certifications pictured on labels, may change depending on the date manufactured. Specifications are subject to change without notice.

SAFETY REQUIREMENTS

The converters are designed to meet North American and International safety regulatory requirements per UL 60950-1/CSA 22.2 No. 60950-1-07 Second Edition, IEC 60950-1: 2005, and EN 60950-1:2006. Basic Insulation is provided between input and output. To comply with safety agencies requirements, an input line fuse must be used external to the converter. The table below provides the recommended fuse rating for use with this family of products.

Input Voltage Range	Fuse Rating
9-36Vdc	1.5A
20-60Vdc	1A
36-72Vdc	0.5A

If one input fuse is used for a group of modules, the maximum fuse rating should not exceed 10A.

WARRANTY

All products manufactured by American Power Design, Inc. (APD) are warranted to be free of defects due to material or workmanship for a period of one year from date of shipment. At our option, APD will repair or replace any non-conforming product.
APD expressly disclaims any liability for consequential or incidental damages resulting from the use or misuse of its products by the purchaser or others.
This warranty is in lieu of all warranties expressed or implied, including the warranties of merchantability. No other warranties, obligations, or liabilities are expressed or implied.
All products being returned for repair require a return material authorization(RMA) assigned by APD prior to return shipment.

American Power Design, Inc.

"The best high voltage design solution"

RoHS

S10 SERIES 10 WATT HIGH VOLTAGE DC/DC CONVERTERS

FEATURES

- Customer Selects Output Voltage
- Outputs to 1000 Vdc
- Low Profile
- Single and Dual Outputs
- Ultra Wide Input Ranges
  (9-36Vdc , 20-60Vdc , 36-72Vdc)
- 1000 Vdc Output Isolation
- Continuous Short Circuit Protection

The S10 Series low profile high voltage DC/DC converter offers a 1000 Vdc isolated single or dual high voltage output in a six-sided metal case. Their small size, wide input, and excellent regulation make them ideally suited for applications that demand a high degree of performance All models will tolerate a short circuit indefinitely.

ELECTRICAL SPECIFICATIONS

Voltage Accuracy	+/- 5%
Line Regulation	+/- 1%
Load Regulation	+/- 3% (20% to full Load)
Output Ripple	< 0.5 % P-P
Input Filter	Low ESR Capacitor
Efficiency	83% (typ.)
Short Circuit Protection	Continuous
Switching Frequency	100 kHz
Output Isolation	1000 Vdc
Input / Output Capacitance	< 80pF

GENERAL SPECIFICATIONS

Temp. Stability	+/- 0.02%/°C
Temp. (Operating , Case)	-25 to +70°C
Temp. (Storage)	-40 to +125°C
EMI/RFI	Six Sided Shield
Derating	None
Cooling	Free-Air Convection

PHYSICAL SPECIFICATIONS

Dimensions	1 x 2 x 0.41 inches
Weight	1.2 Oz
Case Material	Nickel Plated Metal *(With Non-Conductive Base Plate)*

Tel (888) 894-4446 WWW.APOWERDESIGN.COM Fax (603) 898-6534

S10 SERIES 10 WATT HIGH VOLTAGE DC/DC CONVERTERS

REPRESENTATIVE MODEL LISTING

OUTPUT SPECIFICATIONS		MODEL NUMBER / INPUT RANGE					
		9-36VDC		20-60VDC		36-72VDC	
VOLTAGE	CURRENT	Non-RoHs	RoHs	Non-RoHs	RoHs	Non-RoHs	RoHs
24 Vdc	416 mA	S10-S24	S10-S24/Y	S10-S24/B	S10-S24/B/Y	S10-S24/C	S10-S24/C/Y
+/- 24 Vdc	208 mA	S10-D24	S10-D24/Y	S10-D24/B	S10-D24/B/Y	S10-D24/C	S10-D24/C/Y
48 Vdc	208 mA	S10-S48	S10-S48/Y	S10-S48/B	S10-S48/B/Y	S10-S48/C	S10-S48/C/Y
+/- 48 Vdc	104 mA	S10-D48	S10-D48/Y	S10-D48/B	S10-D48/B/Y	S10-D48/C	S10-D48/C/Y
100 Vdc	100 mA	S10-S100	S10-S100/Y	S10-S100/B	S10-S100/B/Y	S10-S100/C	S10-S100/C/Y
+/- 100Vdc	50 mA	S10-D100	S10-D100/Y	S10-D100/B	S10-D100/B/Y	S10-D100/C	S10-D100/C/Y
150 Vdc	66 mA	S10-S150	S10-S150/Y	S10-S150/B	S10-S150/B/Y	S10-S150/C	S10-S150/C/Y
+/- 150 Vdc	33 mA	S10-D150	S10-D150/Y	S10-D150/B	S10-D150/B/Y	S10-D150/C	S10-D150/C/Y
200 Vdc	50 mA	S10-S200	S10-S200/Y	S10-S200/B	S10-S200/B/Y	S10-S200/C	S10-S200/C/Y
+/- 200 Vdc	25 mA	S10-D200	S10-D200/Y	S10-D200/B	S10-D200/B/Y	S10-D200/C	S10-D200/C/Y
300 Vdc	33 mA	S10-S300	S10-S300/Y	S10-S300/B	S10-S300/B/Y	S10-S300/C	S10-S300/C/Y
+/- 300 Vdc	16.6 mA	S10-D300	S10-D300/Y	S10-D300/B	S10-D300/B/Y	S10-D300/C	S10-D300/C/Y
400 Vdc	25 mA	S10-S400	S10-S400/Y	S10-S400/B	S10-S400/B/Y	S10-S400/C	S10-S400/C/Y
+/- 400 Vdc	12.5 mA	S10-D400	S10-D400/Y	S10-D400/B	S10-D400/B/Y	S10-D400/C	S10-D400/C/Y
500 Vdc	20 mA	S10-S500	S10-S500/Y	S10-S500/B	S10-S500/B/Y	S10-S500/C	S10-S500/C/Y
+/- 500 Vdc	10 mA	S10-D500	S10-D500/Y	S10-D500/B	S10-D500/B/Y	S10-D500/C	S10-D500/C/Y
600 Vdc	16.6 mA	S10-S600	S10-S600/Y	S10-S600/B	S10-S600/B/Y	S10-S600/C	S10-S600/C/Y
800 Vdc	12.5 mA	S10-S800	S10-S800/Y	S10-S800/B	S10-S800/B/Y	S10-S800/C	S10-S800/C/Y
1000 Vdc	10 mA	S10-S1000	S10-S1000/Y	S10-S1000/B	S10-S1000/B/Y	S10-S1000/C	S10-S1000/C/Y

S10-D150/B/Y

- S10 — Product Family
- D — Total Output Power
- D — Single/Dual Output
- 150 — Customer Selects Output Voltage
- B — Alternate Input Range
  - /B 20Vdc - 60Vdc
  - /C 36Vdc - 72Vdc
- Y — /Y RoHS Compliance

Customer Selects Output Voltage

The S10 Series are designed such that the customer may order any output voltage from 24Vdc to 1000Vdc at no additional charge. (500Vdc Max. for Dual Outputs)

S10 SERIES 10 WATT HIGH VOLTAGE DC/DC CONVERTERS

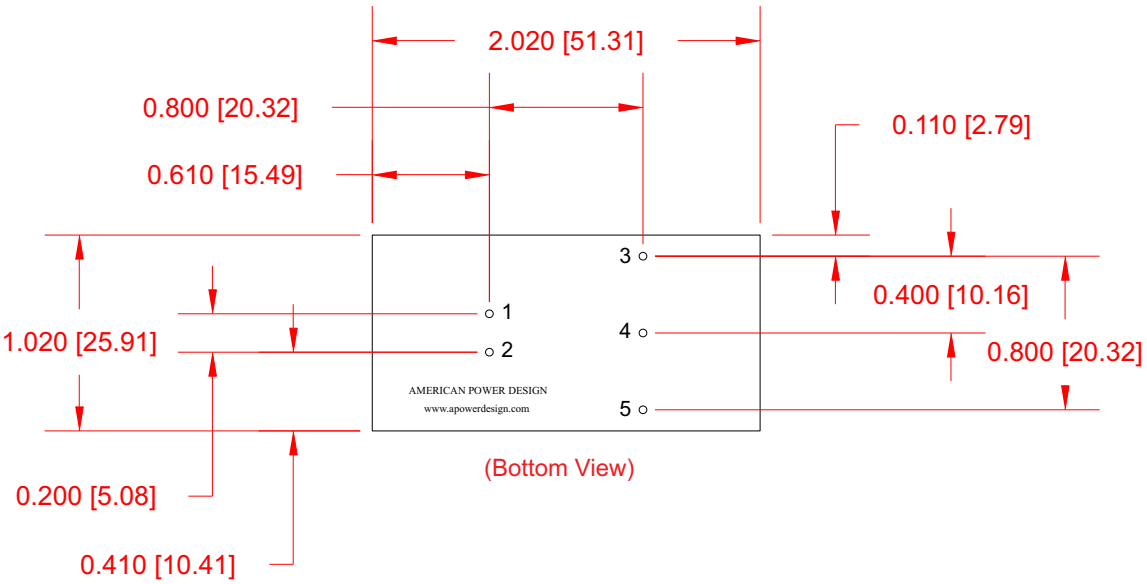

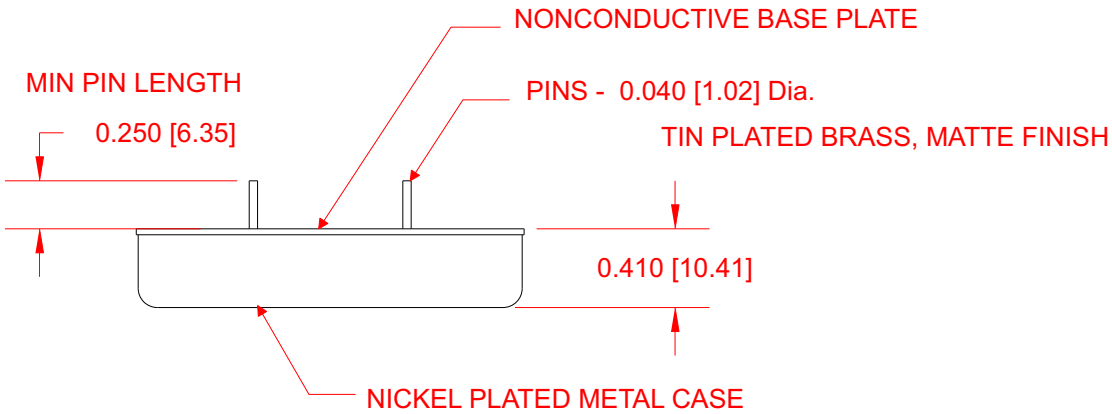

PIN #	SINGLE	DUAL
1	+ Input	+ Input
2	- Input	- Input
3	+Output	+Output
4	No Pin	Com
5	- Output	- Output

Dimensions are in Inches
[Metric equivalents in brackets]

S10 SERIES 10 WATT HIGH VOLTAGE DC/DC CONVERTERS

APPLICATION NOTES

INPUT AND OUTPUT IMPEDANCE

The S10 Series of power converters have been designed to be stable with no external capacitors when used in low inductance input and output circuits. However, in some applications, the inductance associated with the distribution from the power source to the input of the converter can affect the stability of the converter. The addition of a 100 µF electrolytic capacitor with an ESR <1 Ohm across the input helps ensure stability of the converter. In many applications, the user has to use decoupling capacitance at the load.

SHORT CIRCUIT PROTECTION

The S10 Series is equipped with short circuit protection. The converter will fold-back the input power whenever a short circuit is applied to its output and automatically recover after the overload condition is removed.

ISOLATION

The output of the S10 Series is galvanically isolated from both the input and case, capacitance is < 80pF and resistance is > 10G Ohm. The converters case is connected directly to -In to aid in reducing unwanted noise.

RIPPLE AND NOISE

Figure below shows a typical output voltage ripple waveform, measured at full rated load current with no additional output filtering. External low ESR capacitors may be added across output to further reduce ripple.

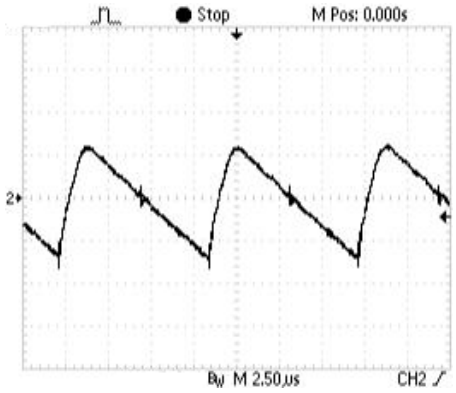

STARTUP TRANSIENT

Figure below shows a typical output voltage during turn-on, measured at 20% load current with no additional output filtering.

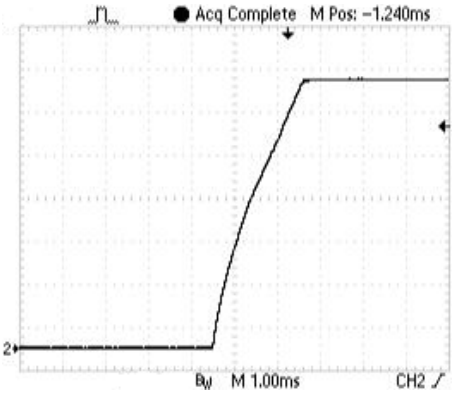

Figure below shows a typical output voltage during turn-on, measured at full rated load current with no additional output filtering.

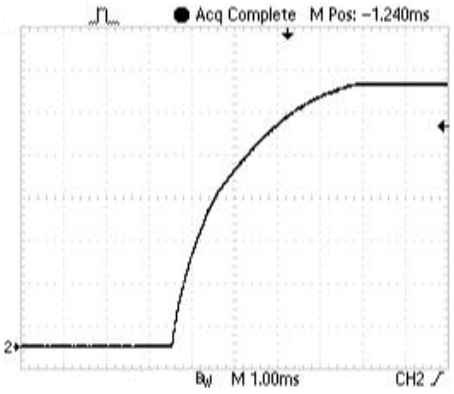

S10 SERIES 10 WATT HIGH VOLTAGE DC/DC CONVERTERS

APPLICATION NOTES

INRUSH CURRENT

The inrush current of the S10 Series has been kept as low as possible. However, a series resistor may be inserted in the input line to limit this current further.

LOAD TRANSIENT

Figure below shows a typical output voltage response, measured during a transition from full rated load current to 20% load current with no additional output filtering.

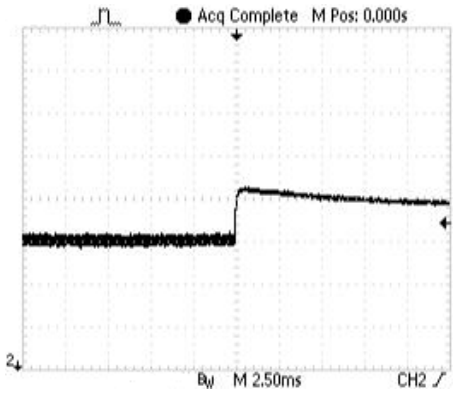

Figure below shows a typical output voltage response, measured during a transition from 20% load current to full rated load current with no additional output filtering.

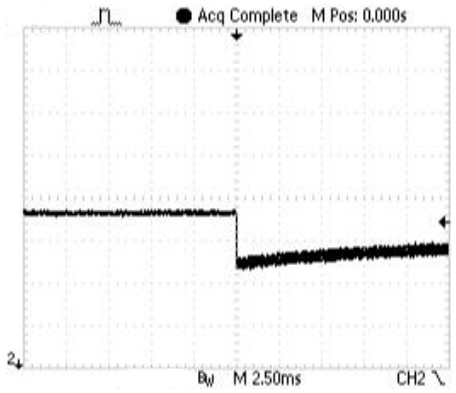

CONNECTION IN PARALLEL

The figures below show how to connect both single and dual outputs of several units with equal nominal output voltage in parallel.

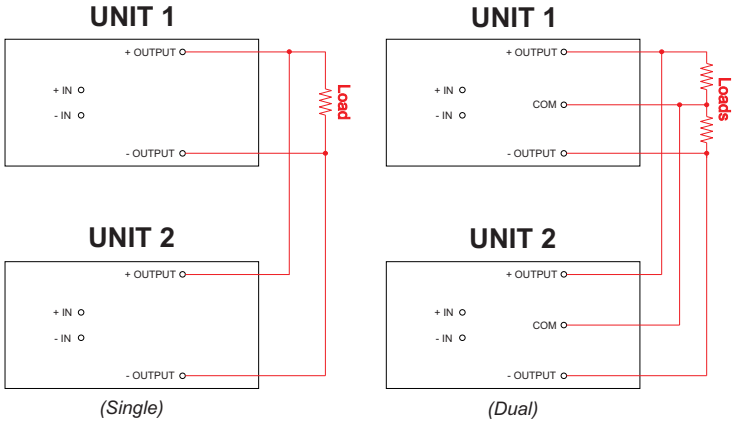

CONNECTION IN SERIES

Figures below show how to connect multiple outputs in series with the use of shunt diodes, taking into consideration that the highest achieved output voltage should remain below the rated isolation voltage.

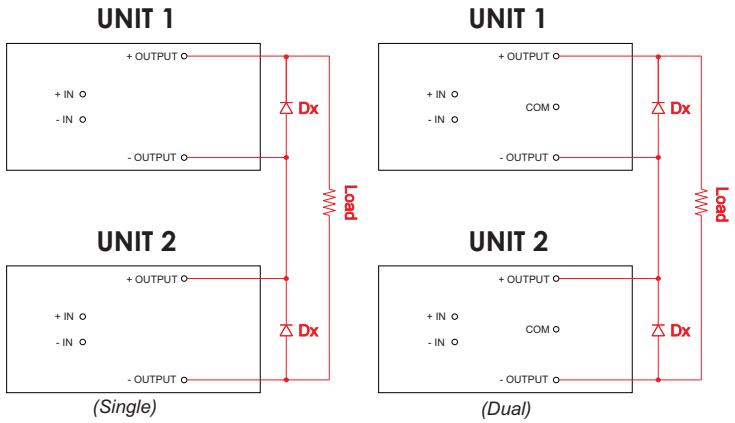

NOTE:
The ratings of Dx should be 1.5 times the maximum current and voltage expected in each branch.

S10 SERIES 10 WATT HIGH VOLTAGE DC/DC CONVERTERS

APPLICATION NOTES

CLEANING AGENTS

In order to avoid possible damage, any penetration of cleaning fluids must be prevented, since the power supplies are not hermetically sealed.

TECHNICAL REVISIONS

The appearance of products, including safety agency certifications pictured on labels, may change depending on the date manufactured. Specifications are subject to change without notice.

NUCLEAR AND MEDICAL APPLICATIONS

American Power Design products are not designed, intended for use in, or authorized for use as critical components in life support systems, equipment used in hazardous environments, or nuclear control systems without the express written consent of American Power Design, Inc.

SAFETY REQUIREMENTS

The converters are designed to meet North American and International safety regulatory requirements per UL 60950-1/CSA 22.2 No. 60950-1-07 Second Edition, IEC 60950-1: 2005, and EN 60950-1:2006. Basic Insulation is provided between input and output. To comply with safety agencies requirements, an input line fuse must be used external to the converter. The table below provides the recommended fuse rating for use with this family of products.

Input Voltage Range	Fuse Rating
9-36Vdc	2A
20-60Vdc	1A
36-72Vdc	0.5A

If one input fuse is used for a group of modules, the maximum fuse rating should not exceed 10A.

WARRANTY

All products manufactured by American Power Design, Inc. (APD) are warranted to be free of defects due to material or workmanship for a period of one year from date of shipment. At our option, APD will repair or replace any non-conforming product.
APD expressly disclaims any liability for consequential or incidental damages resulting from the use or misuse of its products by the purchaser or others.
This warranty is in lieu of all warranties expressed or implied, including the warranties of merchantability. No other warranties, obligations, or liabilities are expressed or implied.
All products being returned for repair require a return material authorization(RMA) assigned by APD prior to return shipment.

American Power Design, Inc.

"The best high voltage design solution"

RoHS

S20 SERIES 20 WATT HIGH VOLTAGE DC/DC CONVERTERS

FEATURES

- Customer Selects Output Voltage
- Outputs to 1000 Vdc
- High Power Density
- Single and Dual Outputs
- Ultra Wide Input Ranges
  (9-36Vdc , 20-60Vdc , 36-72Vdc)
- 1000 Vdc Output Isolation
- Continuous Short Circuit Protection

The S20 Series low profile high voltage DC/DC converter offers a 1000 Vdc isolated single or dual high voltage output in a six-sided metal case. Their small size, wide input, and excellent regulation make them ideally suited for applications that demand a high degree of performance All models will tolerate a short circuit indefinitely.

ELECTRICAL SPECIFICATIONS

Voltage Accuracy	+/- 5%
Line Regulation	+/- 1%
Load Regulation	+/- 3% (20% to full Load)
Output Ripple	< 0.5 % P-P
Input Filter	Low ESR Capacitor
Efficiency	84% (typ.)
Short Circuit Protection	Continuous
Switching Frequency	120 kHz
Output Isolation	1000 Vdc
Input / Output Capacitance	< 160pF

GENERAL SPECIFICATIONS

Temp. Stability	+/- 0.02%/°C
Temp. (Operating , Case)	-25 to +70°C
Temp. (Storage)	-40 to +125°C
EMI/RFI	Six Sided Shield
Derating	None
Cooling	Free-Air Convection

PHYSICAL SPECIFICATIONS

Dimensions	2 x 2 x 0.50 inches
Weight	2.6 Oz
Case Material	Nickel Plated Metal *(With Non-Conductive Base Plate)*

Tel (888) 894-4446 WWW.APOWERDESIGN.COM Fax (603) 898-6534

S20 SERIES 20 WATT HIGH VOLTAGE DC/DC CONVERTERS

REPRESENTATIVE MODEL LISTING

OUTPUT SPECIFICATIONS		MODEL NUMBER / INPUT RANGE					
		9-36VDC		20-60VDC		36-72VDC	
VOLTAGE	CURRENT	Non-RoHs	RoHs	Non-RoHs	RoHs	Non-RoHs	RoHs
24 Vdc	833 mA	S20-S24	S20-S24/Y	S20-S24/B	S20-S24/B/Y	S20-S24/C	S20-S24/C/Y
+/- 24 Vdc	416 mA	S20-D24	S20-D24/Y	S20-D24/B	S20-D24/B/Y	S20-D24/C	S20-D24/C/Y
48 Vdc	416 mA	S20-S48	S20-S48/Y	S20-S48/B	S20-S48/B/Y	S20-S48/C	S20-S48/C/Y
+/- 48 Vdc	208 mA	S20-D48	S20-D48/Y	S20-D48/B	S20-D48/B/Y	S20-D48/C	S20-D48/C/Y
100Vdc	200 mA	S20-S100	S20-S100/Y	S20-S100/B	S20-S100/B/Y	S20-S100/C	S20-S100/C/Y
+/- 100Vdc	100 mA	S20-D100	S20-D100/Y	S20-D100/B	S20-D100/B/Y	S20-D100/C	S20-D100/C/Y
150 Vdc	133 mA	S20-S150	S20-S150/Y	S20-S150/B	S20-S150/B/Y	S20-S150/C	S20-S150/C/Y
+/- 150 Vdc	66 mA	S20-D150	S20-D150/Y	S20-D150/B	S20-D150/B/Y	S20-D150/C	S20-D150/C/Y
200 Vdc	100 mA	S20-S200	S20-S200/Y	S20-S200/B	S20-S200/B/Y	S20-S200/C	S20-S200/C/Y
+/- 200 Vdc	50 mA	S20-D200	S20-D200/Y	S20-D200/B	S20-D200/B/Y	S20-D200/C	S20-D200/C/Y
300 Vdc	66 mA	S20-S300	S20-S300/Y	S20-S300/B	S20-S300/B/Y	S20-S300/C	S20-S300/C/Y
+/- 300 Vdc	33mA	S20-D300	S20-D300/Y	S20-D300/B	S20-D300/B/Y	S20-D300/C	S20-D300/C/Y
400 Vdc	50 mA	S20-S400	S20-S400/Y	S20-S400/B	S20-S400/B/Y	S20-S400/C	S20-S400/C/Y
+/- 400 Vdc	25 mA	S20-D400	S20-D400/Y	S20-D400/B	S20-D400/B/Y	S20-D400/C	S20-D400/C/Y
500 Vdc	40 mA	S20-S500	S20-S500/Y	S20-S500/B	S20-S500/B/Y	S20-S500/C	S20-S500/C/Y
+/- 500 Vdc	20 mA	S20-D500	S20-D500/Y	S20-D500/B	S20-D500/B/Y	S20-D500/C	S20-D500/C/Y
600 Vdc	33 mA	S20-S600	S20-S600/Y	S20-S600/B	S20-S600/B/Y	S20-S600/C	S20-S600/C/Y
800 Vdc	25 mA	S20-S800	S20-S800/Y	S20-S800/B	S20-S800/B/Y	S20-S800/C	S20-S800/C/Y
1000 Vdc	20 mA	S20-S1000	S20-S1000/Y	S20-S1000/B	S20-S1000/B/Y	S20-S1000/C	S20-S1000/C/Y

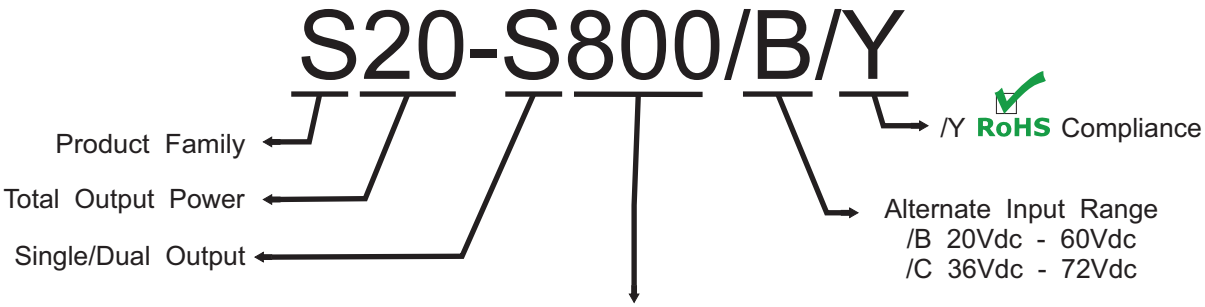

Customer Selects Output Voltage

The S20 Series are designed such that the customer may order any output voltage from 24Vdc to 1000Vdc at no additional charge. (500Vdc Max. for Dual Outputs)

S20 SERIES 20 WATT HIGH VOLTAGE DC/DC CONVERTERS

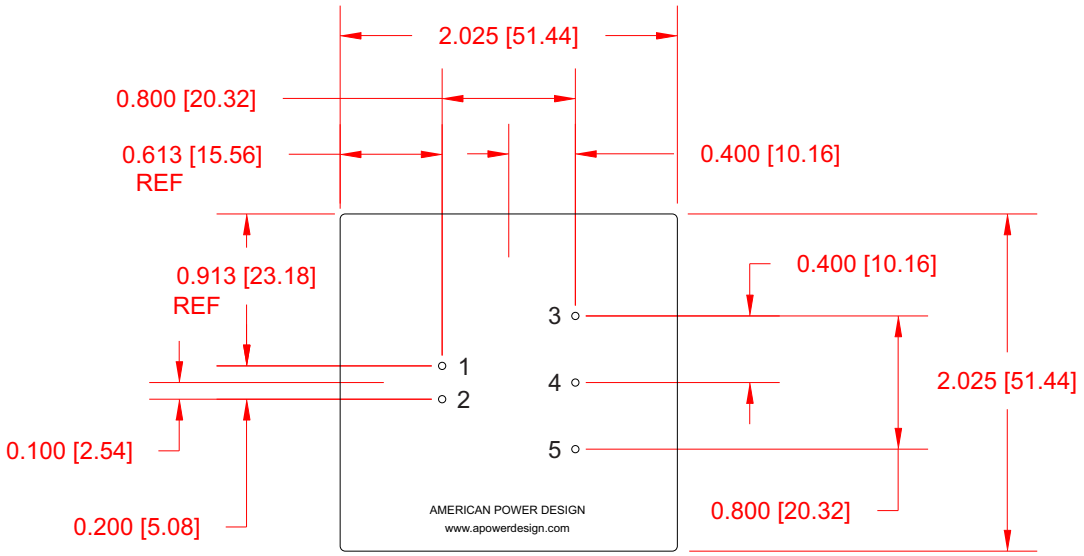

(Bottom View)

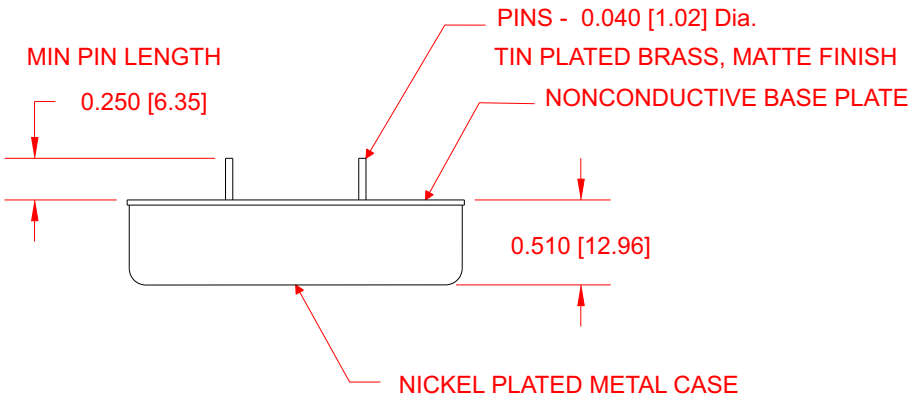

PIN #	SINGLE	DUAL
1	+ Input	+ Input
2	- Input	- Input
3	+Output	+Output
4	No Pin	Com
5	- Output	- Output

Dimensions are in Inches
[Metric equivalents in brackets]

S20 SERIES 20 WATT HIGH VOLTAGE DC/DC CONVERTERS

APPLICATION NOTES

INPUT AND OUTPUT IMPEDANCE

The S20 Series of power converters have been designed to be stable with no external capacitors when used in low inductance input and output circuits. However, in some applications, the inductance associated with the distribution from the power source to the input of the converter can affect the stability of the converter. The addition of a 100 µF electrolytic capacitor with an ESR <1 Ohm across the input helps ensure stability of the converter. In many applications, the user has to use decoupling capacitance at the load.

SHORT CIRCUIT PROTECTION

The S20 Series is equipped with short circuit protection. The converter will fold-back the input power whenever a short circuit is applied to its output and automatically recover after the overload condition is removed.

ISOLATION

The output of the S20 Series is galvanically isolated from both the input and case, capacitance is < 160pF and resistance is > 10G Ohm. The converters case is connected directly to -In to aid in reducing unwanted noise.

RIPPLE AND NOISE

Figure below shows a typical output voltage ripple waveform, measured at full rated load current with no additional output filtering. External low ESR capacitors may be added across output to further reduce ripple.

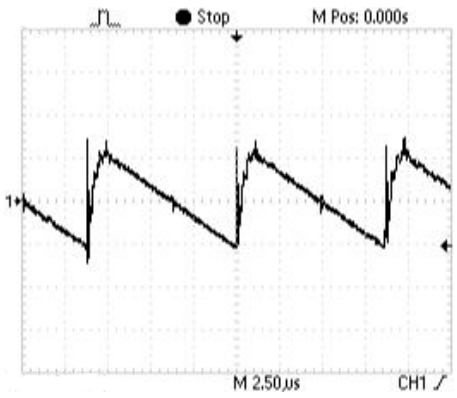

STARTUP TRANSIENT

Figure below shows a typical output voltage during turn-on, measured at 20% load current with no additional output filtering.

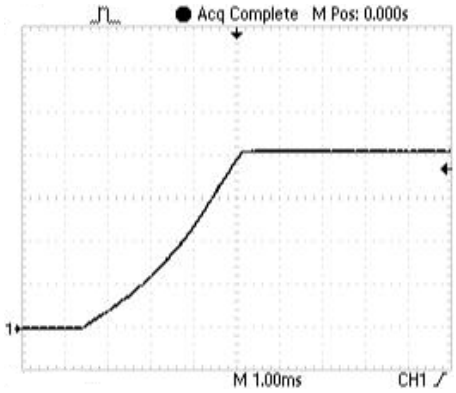

Figure below shows a typical output voltage during turn-on, measured at full rated load current with no additional output filtering.

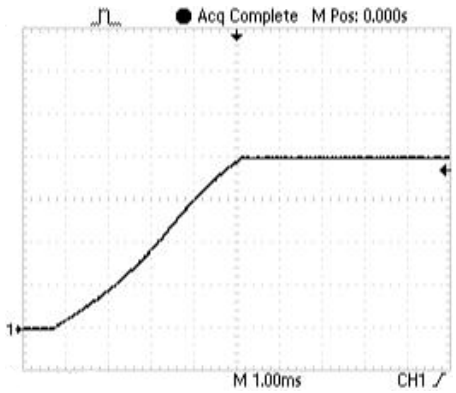

S20 SERIES 20 WATT HIGH VOLTAGE DC/DC CONVERTERS

APPLICATION NOTES

INRUSH CURRENT

The inrush current of the S20 Series has been kept as low as possible. However, a series resistor may be inserted in the input line to limit this current further.

LOAD TRANSIENT

Figure below shows a typical output voltage response, measured during a transition from full rated load current to 20% load current with no additional output filtering.

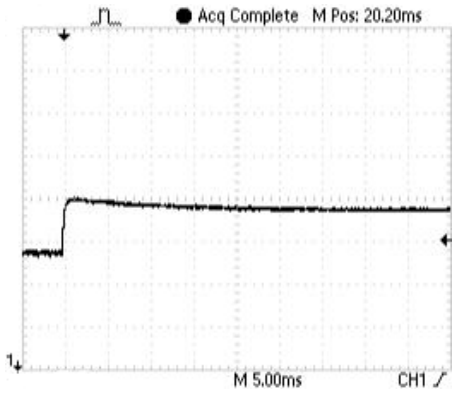

Figure below shows a typical output voltage response, measured during a transition from 20% load current to full rated load current with no additional output filtering.

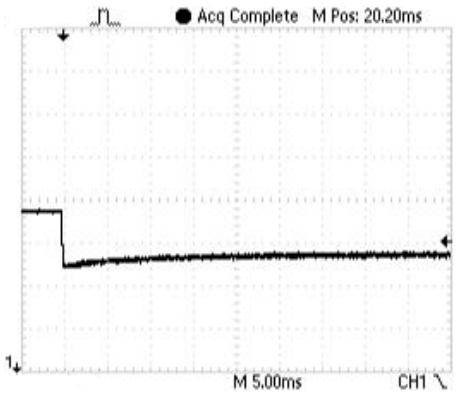

CONNECTION IN PARALLEL

The figures below show how to connect both single and dual outputs of several units with equal nominal output voltage in parallel.

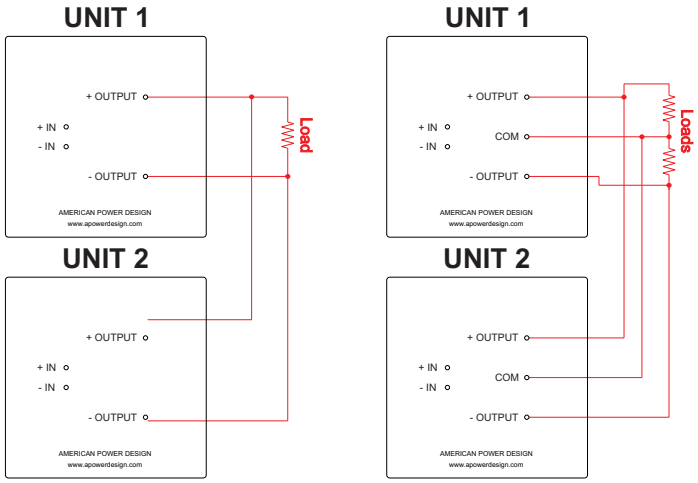

(Single) *(Dual)*

CONNECTION IN SERIES

Figures below show how to connect multiple outputs in series with the use of shunt diodes, taking into consideration that the highest achieved output voltage should remain below the rated isolation voltage.

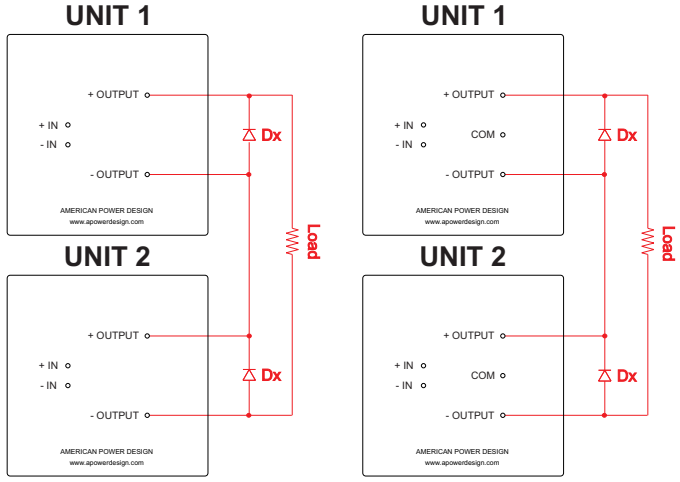

(Single) *(Dual)*

NOTE:
The ratings of Dx should be 1.5 times the maximum current and voltage expected in each branch.

S20 SERIES 20 WATT HIGH VOLTAGE DC/DC CONVERTERS

APPLICATION NOTES

CLEANING AGENTS

In order to avoid possible damage, any penetration of cleaning fluids must be prevented, since the power supplies are not hermetically sealed.

NUCLEAR AND MEDICAL APPLICATIONS

American Power Design products are not designed, intended for use in, or authorized for use as critical components in life support systems, equipment used in hazardous environments, or nuclear control systems without the express written consent of American Power Design, Inc.

TECHNICAL REVISIONS

The appearance of products, including safety agency certifications pictured on labels, may change depending on the date manufactured. Specifications are subject to change without notice.

SAFETY REQUIREMENTS

The converters are designed to meet North American and International safety regulatory requirements per UL 60950-1/CSA 22.2 No. 60950-1-07 Second Edition, IEC 60950-1: 2005, and EN 60950-1:2006. Basic Insulation is provided between input and output. To comply with safety agencies requirements, an input line fuse must be used external to the converter. The table below provides the recommended fuse rating for use with this family of products.

Input Voltage Range	Fuse Rating
9-36Vdc	5A
20-60Vdc	2.5A
36-72Vdc	1.5A

If one input fuse is used for a group of modules, the maximum fuse rating should not exceed 10A.

WARRANTY

All products manufactured by American Power Design, Inc. (APD) are warranted to be free of defects due to material or workmanship for a period of one year from date of shipment. At our option, APD will repair or replace any non-conforming product.
APD expressly disclaims any liability for consequential or incidental damages resulting from the use or misuse of its products by the purchaser or others.
This warranty is in lieu of all warranties expressed or implied, including the warranties of merchantability. No other warranties, obligations, or liabilities are expressed or implied.
All products being returned for repair require a return material authorization(RMA) assigned by APD prior to return shipment.

American Power Design, Inc.

"The best high voltage design solution"

RoHS

S30 SERIES 30 WATT HIGH VOLTAGE DC/DC CONVERTERS

FEATURES

- Customer Selects Output Voltage
- Outputs to 1000 Vdc
- High Power Density
- Single and Dual Outputs
- Ultra Wide Input Ranges
  (9-36Vdc , 20-60Vdc , 36-72Vdc)
- 1000 Vdc Output Isolation
- Continuous Short Circuit Protection

The S30 Series low profile high voltage DC/DC converter offers a 1000 Vdc isolated single or dual high voltage output in a six-sided metal case. Their small size, wide input, and excellent regulation make them ideally suited for applications that demand a high degree of performance All models will tolerate a short circuit indefinitely.

ELECTRICAL SPECIFICATIONS

Voltage Accuracy	+/- 5%
Line Regulation	+/- 1%
Load Regulation	+/- 3% (20% to full Load)
Output Ripple	< 0.5 % P-P
Input Filter	Low ESR Capacitor
Efficiency	85% (typ.)
Short Circuit Protection	Continuous
Switching Frequency	120 kHz
Output Isolation	1000 Vdc
Input / Output Capacitance	< 160pF

GENERAL SPECIFICATIONS

Temp. Stability	+/- 0.02%/°C
Temp. (Operating , Case)	-25 to +70°C
Temp. (Storage)	-40 to +125°C
EMI/RFI	Six Sided Shield
Derating	None
Cooling	Free-Air Convection

PHYSICAL SPECIFICATIONS

Dimensions	2 x 2 x 0.50 inches
Weight	2.6 Oz
Case Material	Nickel Plated Metal *(With Non-Conductive Base Plate)*

Tel (888) 894-4446 WWW.APOWERDESIGN.COM Fax (603) 898-6534

S30 SERIES 30 WATT HIGH VOLTAGE DC/DC CONVERTERS

REPRESENTATIVE MODEL LISTING

OUTPUT SPECIFICATIONS		MODEL NUMBER / INPUT RANGE					
		9-36VDC		20-60VDC		36-72VDC	
VOLTAGE	CURRENT	Non-RoHs	RoHs	Non-RoHs	RoHs	Non-RoHs	RoHs
24 Vdc	1.2 A	S30-S24	S30-S24/Y	S30-S24/B	S30-S24/B/Y	S30-S24/C	S30-S24/C/Y
+/- 24 Vdc	625 mA	S30-D24	S30-D24/Y	S30-D24/B	S30-D24/B/Y	S30-D24/C	S30-D24/C/Y
48 Vdc	625 mA	S30-S48	S30-S48/Y	S30-S48/B	S30-S48/B/Y	S30-S48/C	S30-S48/C/Y
+/- 48 Vdc	312 mA	S30-D48	S30-D48/Y	S30-D48/B	S30-D48/B/Y	S30-D48/C	S30-D48/C/Y
100Vdc	300 mA	S30-S100	S30-S100/Y	S30-S100/B	S30-S100/B/Y	S30-S100/C	S30-S100/C/Y
+/- 100Vdc	150 mA	S30-D100	S30-D100/Y	S30-D100/B	S30-D100/B/Y	S30-D100/C	S30-D100/C/Y
150 Vdc	200 mA	S30-S150	S30-S150/Y	S30-S150/B	S30-S150/B/Y	S30-S150/C	S30-S150/C/Y
+/- 150 Vdc	100 mA	S30-D150	S30-D150/Y	S30-D150/B	S30-D150/B/Y	S30-D150/C	S30-D150/C/Y
200 Vdc	150 mA	S30-S200	S30-S200/Y	S30-S200/B	S30-S200/B/Y	S30-S200/C	S30-S200/C/Y
+/- 200 Vdc	75 mA	S30-D200	S30-D200/Y	S30-D200/B	S30-D200/B/Y	S30-D200/C	S30-D200/C/Y
300 Vdc	100 mA	S30-S300	S30-S300/Y	S30-S300/B	S30-S300/B/Y	S30-S300/C	S30-S300/C/Y
+/- 300 Vdc	50 mA	S30-D300	S30-D300/Y	S30-D300/B	S30-D300/B/Y	S30-D300/C	S30-D300/C/Y
400 Vdc	75 mA	S30-S400	S30-S400/Y	S30-S400/B	S30-S400/B/Y	S30-S400/C	S30-S400/C/Y
+/- 400 Vdc	37 mA	S30-D400	S30-D400/Y	S30-D400/B	S30-D400/B/Y	S30-D400/C	S30-D400/C/Y
500 Vdc	60 mA	S30-S500	S30-S500/Y	S30-S500/B	S30-S500/B/Y	S30-S500/C	S30-S500/C/Y
+/- 500 Vdc	30 mA	S30-D500	S30-D500/Y	S30-D500/B	S30-D500/B/Y	S30-D500/C	S30-D500/C/Y
600 Vdc	50 mA	S30-S600	S30-S600/Y	S30-S600/B	S30-S600/B/Y	S30-S600/C	S30-S600/C/Y
800 Vdc	37 mA	S30-S800	S30-S800/Y	S30-S800/B	S30-S800/B/Y	S30-S800/C	S30-S800/C/Y
1000 Vdc	30 mA	S30-S1000	S30-S1000/Y	S30-S1000/B	S30-S1000/B/Y	S30-S1000/C	S30-S1000/C/Y

S30-S700/C/Y

- Product Family
- Total Output Power
- Single/Dual Output
- /Y RoHS Compliance
- Alternate Input Range
  - /B 20Vdc - 60Vdc
  - /C 36Vdc - 72Vdc

Customer Selects Output Voltage

The S30 Series are designed such that the customer may order any output voltage from 24Vdc to 1000Vdc at no additional charge. (500Vdc Max. for Dual Outputs)

S30 SERIES 30 WATT HIGH VOLTAGE DC/DC CONVERTERS

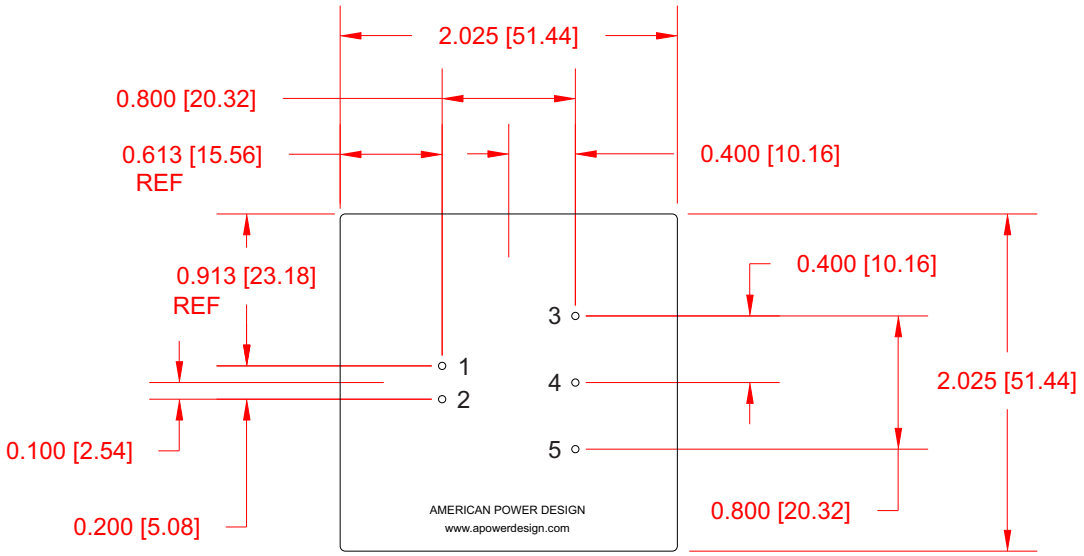

(Bottom View)

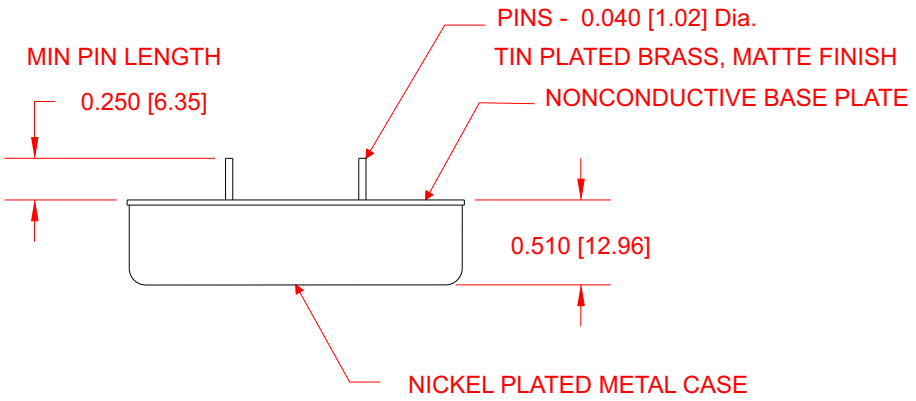

PIN #	SINGLE	DUAL
1	+ Input	+ Input
2	- Input	- Input
3	+Output	+Output
4	No Pin	Com
5	- Output	- Output

Dimensions are in Inches
[Metric equivalents in brackets]

S30 SERIES 30 WATT HIGH VOLTAGE DC/DC CONVERTERS

APPLICATION NOTES

INPUT AND OUTPUT IMPEDANCE

The S30 Series of power converters have been designed to be stable with no external capacitors when used in low inductance input and output circuits. However, in some applications, the inductance associated with the distribution from the power source to the input of the converter can affect the stability of the converter. The addition of a 100 µF electrolytic capacitor with an ESR <1 Ohm across the input helps ensure stability of the converter. In many applications, the user has to use decoupling capacitance at the load.

SHORT CIRCUIT PROTECTION

The S30 Series is equipped with short circuit protection. The converter will fold-back the input power whenever a short circuit is applied to its output and automatically recover after the overload condition is removed.

ISOLATION

The output of the S30 Series is galvanically isolated from both the input and case, capacitance is < 160pF and resistance is > 10G Ohm. The converters case is connected directly to -In to aid in reducing unwanted noise.

RIPPLE AND NOISE

Figure below shows a typical output voltage ripple waveform, measured at full rated load current with no additional output filtering. External low ESR capacitors may be added across output to further reduce ripple.

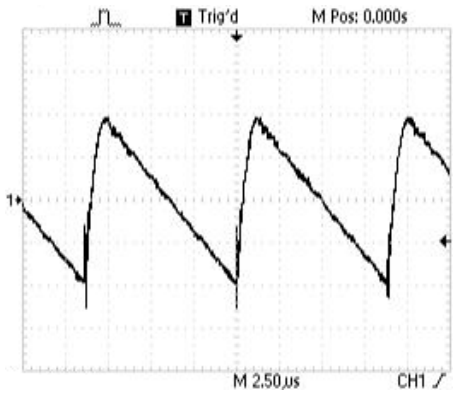

STARTUP TRANSIENT

Figure below shows a typical output voltage during turn-on, measured at 20% load current with no additional output filtering.

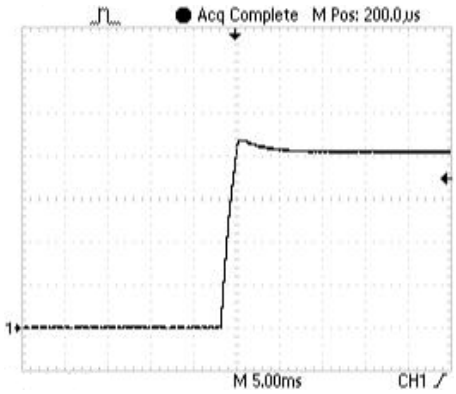

Figure below shows a typical output voltage during turn-on, measured at full rated load current with no additional output filtering.

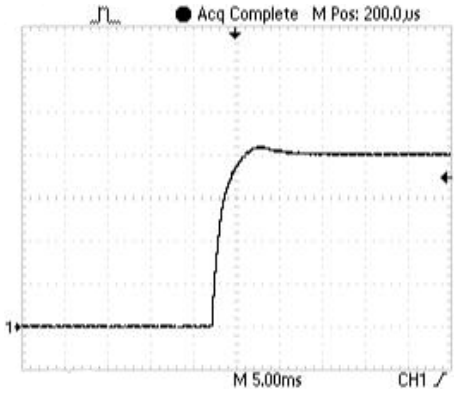

S30 SERIES 30 WATT HIGH VOLTAGE DC/DC CONVERTERS

APPLICATION NOTES

INRUSH CURRENT

The inrush current of the S30 Series has been kept as low as possible. However, a series resistor may be inserted in the input line to limit this current further.

LOAD TRANSIENT

Figure below shows a typical output voltage response, measured during a transition from full rated load current to 20% load current with no additional output filtering.

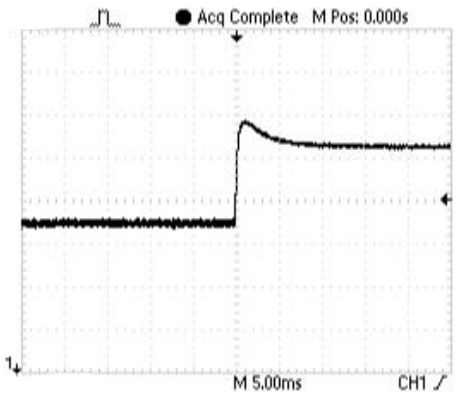

Figure below shows a typical output voltage response, measured during a transition from 20% load current to full rated load current with no additional output filtering.

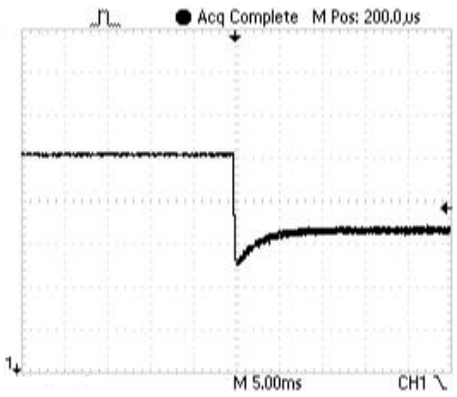

CONNECTION IN PARALLEL

The figures below show how to connect both single and dual outputs of several units with equal nominal output voltage in parallel.

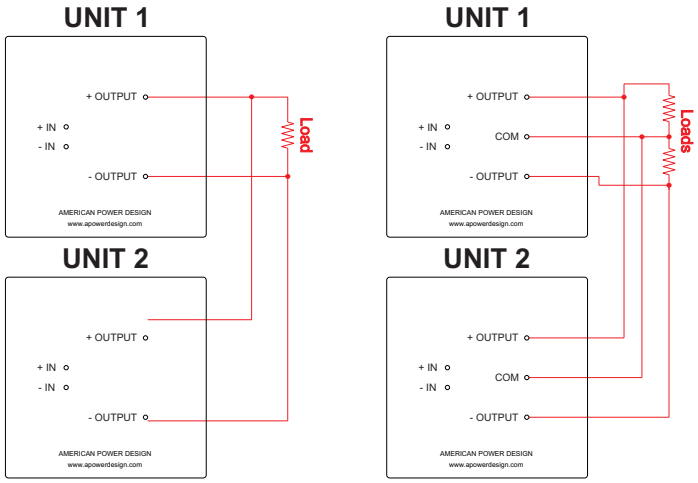

(Single) *(Dual)*

CONNECTION IN SERIES

Figures below show how to connect multiple outputs in series with the use of shunt diodes, taking into consideration that the highest achieved output voltage should remain below the rated isolation voltage.

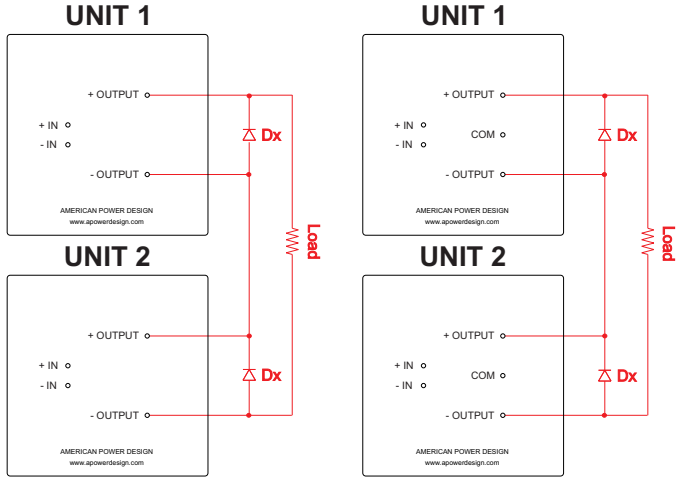

(Single) *(Dual)*

NOTE:
The ratings of Dx should be 1.5 times the maximum current and voltage expected in each branch.

S30 SERIES 30 WATT HIGH VOLTAGE DC/DC CONVERTERS

APPLICATION NOTES

CLEANING AGENTS

In order to avoid possible damage, any penetration of cleaning fluids must be prevented, since the power supplies are not hermetically sealed.

NUCLEAR AND MEDICAL APPLICATIONS

American Power Design products are not designed, intended for use in, or authorized for use as critical components in life support systems, equipment used in hazardous environments, or nuclear control systems without the express written consent of American Power Design, Inc.

TECHNICAL REVISIONS

The appearance of products, including safety agency certifications pictured on labels, may change depending on the date manufactured. Specifications are subject to change without notice.

SAFETY REQUIREMENTS

The converters are designed to meet North American and International safety regulatory requirements per UL 60950-1/CSA 22.2 No. 60950-1-07 Second Edition, IEC 60950-1: 2005, and EN 60950-1:2006. Basic Insulation is provided between input and output. To comply with safety agencies requirements, an input line fuse must be used external to the converter. The table below provides the recommended fuse rating for use with this family of products.

Input Voltage Range	Fuse Rating
9-36Vdc	5A
20-60Vdc	2.5A
36-72Vdc	1.5A

If one input fuse is used for a group of modules, the maximum fuse rating should not exceed 10A.

WARRANTY

All products manufactured by American Power Design, Inc. (APD) are warranted to be free of defects due to material or workmanship for a period of one year from date of shipment. At our option, APD will repair or replace any non-conforming product.
APD expressly disclaims any liability for consequential or incidental damages resulting from the use or misuse of its products by the purchaser or others.
This warranty is in lieu of all warranties expressed or implied, including the warranties of merchantability. No other warranties, obligations, or liabilities are expressed or implied.
All products being returned for repair require a return material authorization(RMA) assigned by APD prior to return shipment.

American Power Design, Inc.

"The best high voltage design solution"

RoHS

X10 SERIES 10 WATT HIGH VOLTAGE DC/DC CONVERTERS

FEATURES

- Customer Selects Output Voltage
- Ultra Wide Input Ranges
  (9-36Vdc , 20-60Vdc , 36-72Vdc)
- Efficiency 85% (typ.)
- Independently Isolated Outputs
- Six-Sided Shielded Case
- Remote On/Off Control
- Continuous Short Circuit Protection

The X10 Series of DC/DC converters accepts ultra wide input ranges of 9-36 Vdc, 20-60 Vdc & 36-72 Vdc. Outputs are independently isolated. In the case of duals, up to 8 Watts of power may be taken from either output. All models will tolerate a short circuit indefinitely. Also included is a Pi input filter and remote on/off.

ELECTRICAL SPECIFICATIONS

Voltage Accuracy*	+/- 1%
Line Regulation*	+/- 0.1%
Load Regulation*	+/- 0.2%
Output Ripple	< 0.3% P-P
Input Filter	Pi Network
Efficiency	85% (typ.)
Short Circuit Protection	Continuous
Switching Frequency	120 kHz
Isolation (Input-Output(1)-Output(2)-Case)	1000 Vdc
Input / Output Capacitance	< 80pF

** Dual outputs are +/- 2% for output 2*

GENERAL SPECIFICATIONS

Temp. Stability	+/-0.02%/°C
Temp. (Operating , Case)	-45 to +85°C
Temp. (Storage)	-55 to +100°C
Logic Shutdown	Logic 0 (on)
EMI/RFI	Six Sided Shield
Derating	None
Cooling	Free-Air Convection

PHYSICAL SPECIFICATIONS

Dimensions	2 x 2 x 0.51 inches
Weight	2.8 Oz
Case Material	Nickel Plated Metal *(With Non-Conductive Base Plate)*

Tel (888) 894-4446 WWW.APOWERDESIGN.COM Fax (603) 898-6534

American Power Design, Inc.

"The best high voltage design solution"

RoHS

X10 SERIES 10 WATT HIGH VOLTAGE DC/DC CONVERTERS

REPRESENTATIVE MODEL LISTING									
OUTPUT SPECS				MODEL NUMBER / INPUT RANGE					
VOLTAGE		CURRENT		9-36VDC		20-60VDC		36-72VDC	
OUT #1	OUT #2	OUT #1	OUT #2	Non-RoHs	RoHs	Non-RoHs	RoHs	Non-RoHs	RoHs
24 Vdc	-	416 mA	-	X10-24	X10-24/Y	X10-24/B	X10-24/B/Y	X10-24/C	X10-24/C/Y
24 Vdc	24Vdc	208 mA	208 mA	X10-24/24	X10-24/24/Y	X10-24/24/B	X10-24/24/B/Y	X10-24/24/C	X10-24/24/C/Y
48 Vdc	-	208 mA	-	X10-48	X10-48/Y	X10-48/B	X10-48/B/Y	X10-48/C	X10-48/C/Y
48 Vdc	48Vdc	104 mA	104 mA	X10-48/48	X10-48/48/Y	X10-48/48/B	X10-48/48/B/Y	X10-48/48/C	X10-48/48/C/Y
50 Vdc	-	200 mA	-	X10-50	X10-50/Y	X10-50/B	X10-50/B/Y	X10-50/C	X10-50/C/Y
50Vdc	50 Vdc	100 mA	100 mA	X10-50/50	X10-50/50/Y	X10-50/50/B	X10-50/50/B/Y	X10-50/50/C	X10-50/50/C/Y
75Vdc	-	133 mA		X10-75	X10-75/Y	X10-75/B	X10-75/B/Y	X10-75/C	X10-75/C/Y
75 Vdc	75 Vdc	66 mA	66 mA	X10-75/75	X10-75/75/Y	X10-75/75/B	X10-75/75/B/Y	X10-75/75/C	X10-75/75/C/Y
100 Vdc	-	100 mA	-	X10-100	X10-100/Y	X10-100/B	X10-100/B/Y	X10-100/C	X10-100/C/Y
100 Vdc	100Vdc	50 mA	50 mA	X10-100/100	X10-100/100/Y	X10-100/100/B	X10-100/100/B/Y	X10-100/100/C	X10-100/100/C/Y
150 Vdc	-	66 mA	-	X10-150	X10-150/Y	X10-150/B	X10-150/B/Y	X10-150/C	X10-150/C/Y
150 Vdc	150 Vdc	33 mA	33 mA	X10-150/150	X10-150/150/Y	X10-150/150/B	X10-150/150/B/Y	X10-150/150/C	X10-150/150/C/Y
200 Vdc	-	50 mA	-	X10-200	X10-200/Y	X10-200/B	X10-200/B/Y	X10-200/C	X10-200/C/Y
200Vdc	200Vdc	25 mA	25 mA	X10-200/200	X10-200/200/Y	X10-200/200/B	X10-200/200/B/Y	X10-200/200/C	X10-200/200/C/Y
300 Vdc	-	33 mA	-	X10-300	X10-300/Y	X10-300/B	X10-300/B/Y	X10-300/C	X10-300/C/Y
300 Vdc	300 Vdc	16 mA	16 mA	X10-300/300	X10-300/300/Y	X10-300/300/B	X10-300/300/B/Y	X10-300/300/C	X10-300/300/C/Y
400Vdc	-	25 mA	-	X10-400	X10-400/Y	X10-400/B	X10-400/B/Y	X10-400/C	X10-400/C/Y
400Vdc	400 Vdc	12 mA	12 mA	X10-400/400	X10-400/400/Y	X10-400/400/B	X10-400/400/B/Y	X10-400/400/C	X10-400/400/C/Y
500 Vdc	-	20 mA	-	X10-500	X10-500/Y	X10-500/B	X10-500/B/Y	X10-500/C	X10-500/C/Y
500 Vdc	500Vdc	10 mA	10 mA	X10-500/500	X10-500/500/Y	X10-500/500/B	X10-500/500/B/Y	X10-500/500/C	X10-500/500/C/Y

X10-150/150/B/Y

- X10 — Product Family
- 150 — Total Output Power
- 150 — Out 1
- 150 — Out 2
- B — Alternate Input Range
  - /B 20Vdc - 60Vdc
  - /C 36Vdc - 72Vdc
- Y — /Y RoHS Compliance

Customer Selects Output Voltage

The X10 Series are designed such that the customer may order any output voltage from 24Vdc to 500Vdc at no additional charge.

X10 SERIES 10 WATT HIGH VOLTAGE DC/DC CONVERTERS

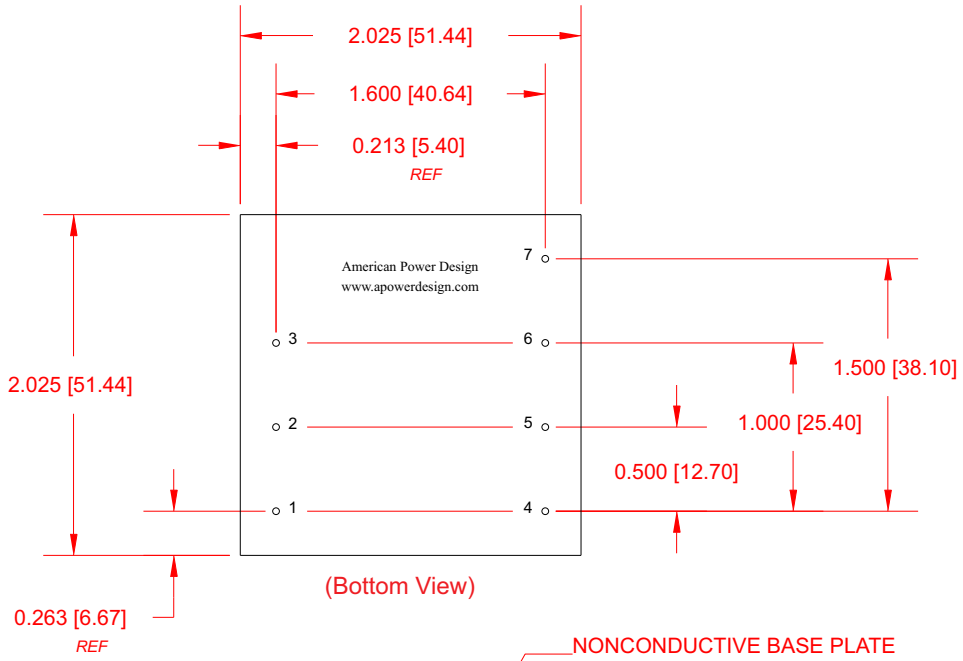

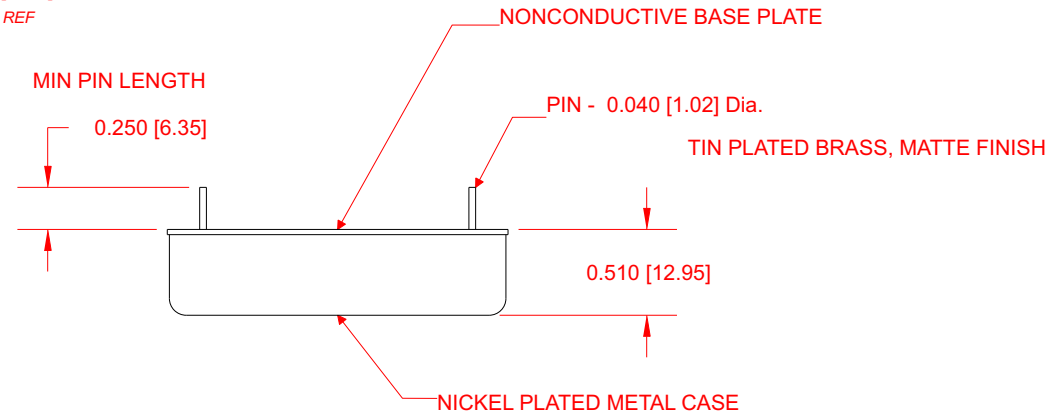

PIN #	SINGLE	DUAL
1	- Input	- Input
2	On/Off	On/Off
3	+ Input	+ Input
4	No Pin	+ Output 2
5	No Pin	- Output 2
6	- Output 1	- Output 1
7	+ Output 1	+ Output 1

Dimensions are in Inches
[Metric equivalents in brackets]

X10 SERIES 10 WATT HIGH VOLTAGE DC/DC CONVERTERS

APPLICATION NOTES

INPUT AND OUTPUT IMPEDANCE

The X10 Series of power converters have been designed to be stable with no external capacitors when used in low inductance input and output circuits. However, in some applications, the inductance associated with the distribution from the power source to the input of the converter can affect the stability of the converter. The addition of a 100 µF electrolytic capacitor with an ESR <1 Ohm across the input helps ensure stability of the converter. In many applications, the user has to use decoupling capacitance at the load.

SHORT CIRCUIT PROTECTION

The X10 Series is equipped with short circuit protection. The converter will fold-back the input power whenever a short circuit is applied to its output and automatically recover after the overload condition is removed.

ISOLATION

The output(s) of the X10 Series is galvanically isolated from both the input and case, capacitance is < 80pF and resistance is > 10G Ohm.

In the case of dual's, the outputs are independently isolated from one another as well as the input and case.

RIPPLE AND NOISE

Figure below shows a typical output voltage ripple waveform, measured at full rated load current with no additional output filtering. External low ESR capacitors may be added across output to further reduce ripple.

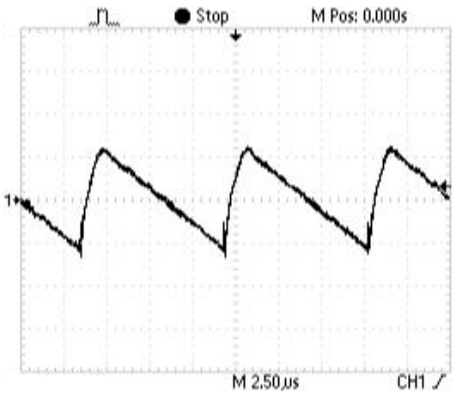

STARTUP TRANSIENT

Figure below shows a typical output voltage during turn-on, measured at no load current with no additional output filtering.

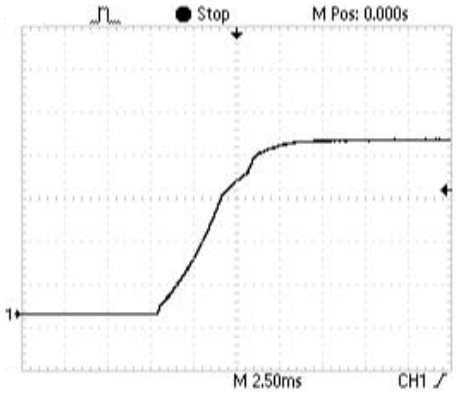

Figure below shows a typical output voltage during turn-on, measured at full rated load current with no additional output filtering.

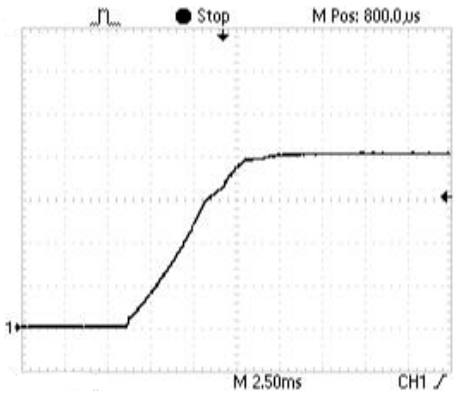

X10 SERIES 10 WATT HIGH VOLTAGE DC/DC CONVERTERS

APPLICATION NOTES

INRUSH CURRENT

The inrush current of the X10 Series has been kept as low as possible. However, a series resistor may be inserted in the input line to limit this current further.

LOAD TRANSIENT

Figure below shows a typical output voltage response, measured during a transition from full rated load current to no load current with no additional output filtering.

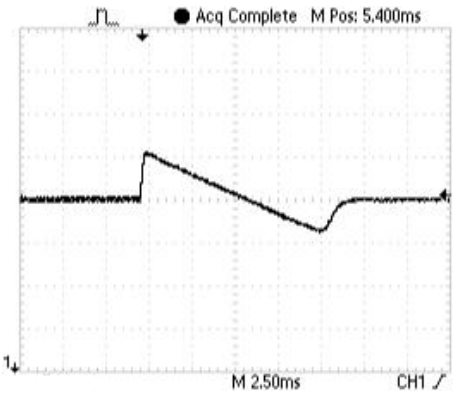

Figure below shows a typical output voltage response, measured during a transition from no load current to full rated load current with no additional output filtering.

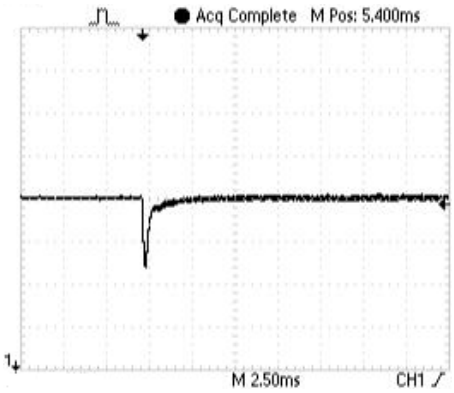

REMOTE ON/OFF CONTROL

The On/Off control pin allows the user to shut down the converter mechanically or logically using a relay or a TTL or CMOS logic signal.

Connect Remote On/Off pin to -Input when not in use to ensure proper operation.

Resistor R1 can be calculated by:

$$R1 = \frac{(+\text{Input} - 5)}{1mA}$$

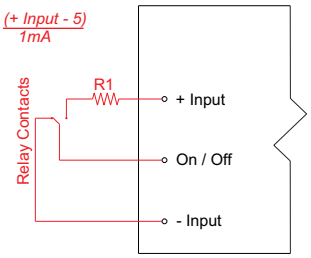

Converter Off: Vc >3Vdc
Converter On: Vc <1.5Vdc

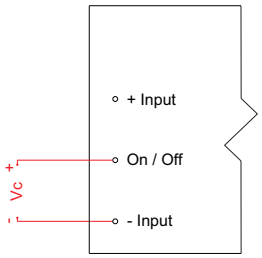

NOTE:
Do not exceed 6Vdc on remote On/Off. otherwise, the supply may be permanently damaged.

OUTPUT CONFIGURATIONS

Due to the unique independently isolated outputs of the X10 series both Output #1 and Output #2 may be connected in a wide variety configurations.
The Figures below are some examples.

Dual Positive Output

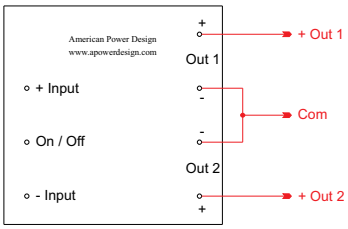

Dual Negitive Output

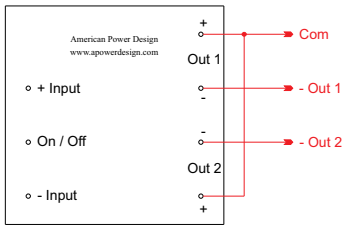

Bipolar Output

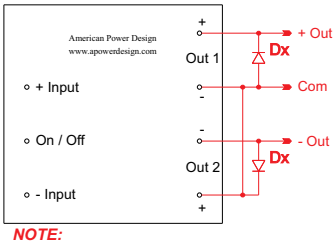

Outputs > 500Vdc

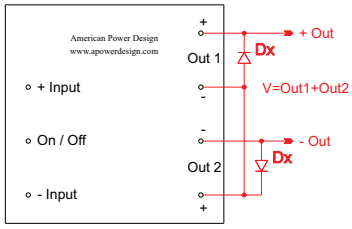

NOTE:
The ratings of Dx should be 1.5 times the maximum current and voltage (Out 1 + Out 2).

X10 SERIES 10 WATT HIGH VOLTAGE DC/DC CONVERTERS

APPLICATION NOTES

CONNECTION IN PARALLEL

The figure below shows how to connect several single output units with equal nominal output voltage in parallel.

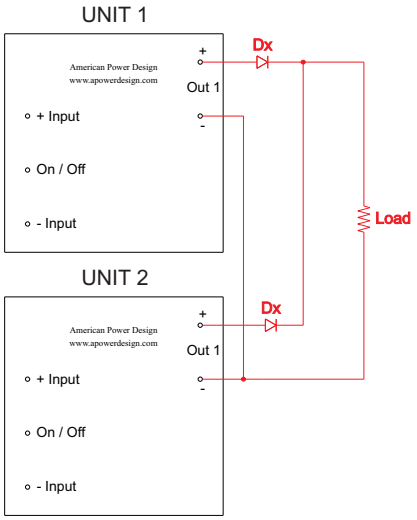

The figure below show how to connect several dual output units with equal nominal output voltage in parallel.

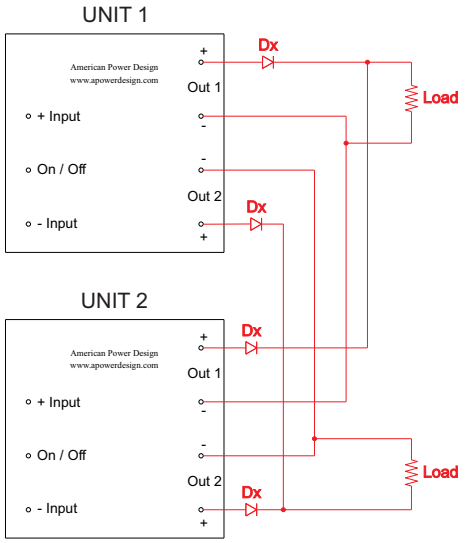

CONNECTION IN SERIES

When connecting units in series, the highest achieved output voltage should remain below the rated isolation voltage.

Figure below shows how to connect multiple single output units in series with the use of shunt diodes.

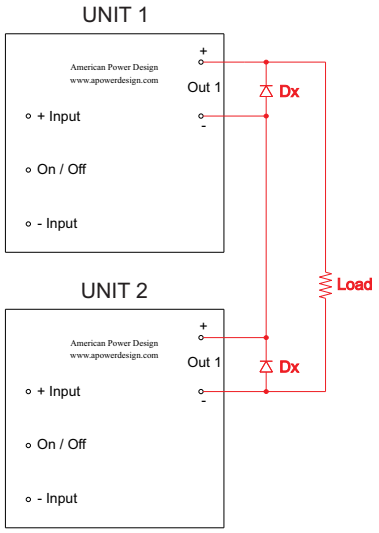

NOTE:
The ratings of Dx should be 1.5 times the maximum current and voltage expected in each branch.

Figure below shows how to connect multiple dual output units in series with the use of shunt diodes.

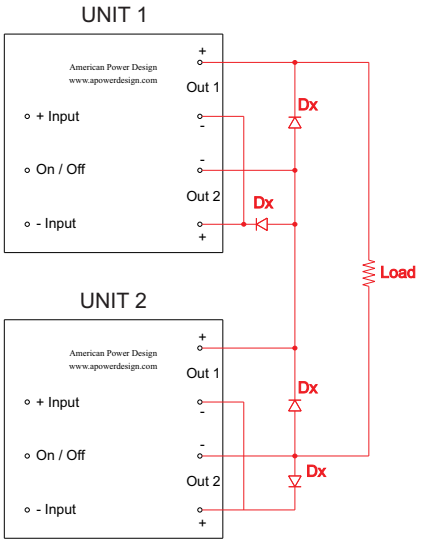

NOTE:
The ratings of Dx should be 1.5 times the maximum current and voltage expected in each branch.

X10 SERIES 10 WATT HIGH VOLTAGE DC/DC CONVERTERS

APPLICATION NOTES

CLEANING AGENTS

In order to avoid possible damage, any penetration of cleaning fluids must be prevented, since the power supplies are not hermetically sealed.

NUCLEAR AND MEDICAL APPLICATIONS

American Power Design products are not designed, intended for use in, or authorized for use as critical components in life support systems, equipment used in hazardous environments, or nuclear control systems without the express written consent of American Power Design, Inc.

TECHNICAL REVISIONS

The appearance of products, including safety agency certifications pictured on labels, may change depending on the date manufactured. Specifications are subject to change without notice.

SAFETY REQUIREMENTS

The converters are designed to meet North American and International safety regulatory requirements per UL 60950-1/CSA 22.2 No. 60950-1-07 Second Edition, IEC 60950-1: 2005, and EN 60950-1:2006. Basic Insulation is provided between input and output. To comply with safety agencies requirements, an input line fuse must be used external to the converter. The table below provides the recommended fuse rating for use with this family of products.

Input Voltage Range	Fuse Rating
9-36Vdc	1.5A
20-60Vdc	1A
36-72Vdc	0.5

If one input fuse is used for a group of modules, the maximum fuse rating should not exceed 10A.

WARRANTY

All products manufactured by American Power Design, Inc. (APD) are warranted to be free of defects due to material or workmanship for a period of one year from date of shipment. At our option, APD will repair or replace any non-conforming product.
APD expressly disclaims any liability for consequential or incidental damages resulting from the use or misuse of its products by the purchaser or others.
This warranty is in lieu of all warranties expressed or implied, including the warranties of merchantability. No other warranties, obligations, or liabilities are expressed or implied.
All products being returned for repair require a return material authorization(RMA) assigned by APD prior to return shipment.

American Power Design, Inc.

"The best high voltage design solution"

RoHS

X30 SERIES 30 WATT HIGH VOLTAGE DC/DC CONVERTERS

FEATURES

- Customer Selects Output Voltage
- Ultra Wide Input Ranges
  (9-36Vdc , 20-60Vdc , 36-72Vdc)
- Efficiency 86% (typ.)
- Independently Isolated Outputs
- Six-Sided Shielded Case
- Remote On/Off Control
- Continuous Short Circuit Protection

The X30 Series of DC/DC converters accepts ultra wide input ranges of 9-36 Vdc, 20-60 Vdc, & 36-72 Vdc. Outputs are independently isolated. In the case of duals, up to 24 Watts may be taken from either output. All models will tolerate a short circuit indefinitely. Also included is a Pi input filter and remote on/off.

ELECTRICAL SPECIFICATIONS

Voltage Accuracy	+/- 1%
Line Regulation	+/- 0.2 %
Load Regulation	+/- 0.3%
Output Ripple	< 0.3% P-P
Input Filter	Pi Network
Efficiency	86% (typ.)
Short Circuit Protection	Continuous
Switching Frequency	120 kHz
Isolation (Input-Output(1)-Output(2)-Case)	1000 Vdc
Input / Output Capacitance	< 160pF

GENERAL SPECIFICATIONS

Temp. Stability	+/-0.02%/°C
Temp. (Operating , Case)	-45 to +85°C
Temp. (Storage)	-55 to +100°C
Logic Shutdown	Logic 0 (on)
EMI/RFI	Six Sided Shield
Derating	None
Cooling	Free-Air Convection

PHYSICAL SPECIFICATIONS

Dimensions	2.6 x 3.0 x 0.84 inches
Weight	8.4 Oz
Case Material	Nickel Plated Metal *(With Non-Conductive Base Plate)*

American Power Design, Inc.

"The best high voltage design solution"

RoHS

X30 SERIES 30 WATT HIGH VOLTAGE DC/DC CONVERTERS

REPRESENTATIVE MODEL LISTING

OUTPUT SPECS				MODEL NUMBER / INPUT RANGE					
VOLTAGE		CURRENT		9-36VDC		20-60VDC		36-72VDC	
OUT #1	OUT #2	OUT #1	OUT #2	Non-RoHs	RoHs	Non-RoHs	RoHs	Non-RoHs	RoHs
24 Vdc	-	1.2 A	-	X30-24	X30-24/Y	X30-24/B	X30-24/B/Y	X30-24/C	X30-24/C/Y
24 Vdc	24Vdc	625 mA	625 mA	X30-24/24	X30-24/24/Y	X30-24/24/B	X30-24/24/B/Y	X30-24/24/C	X30-24/24/C/Y
48 Vdc	-	625 mA	-	X30-48	X30-48/Y	X30-48/B	X30-48/B/Y	X30-48/C	X30-48/C/Y
48 Vdc	48Vdc	312 mA	312 mA	X30-48/48	X30-48/48/Y	X30-48/48/B	X30-48/48/B/Y	X30-48/48/C	X30-48/48/C/Y
50 Vdc	-	600 mA	-	X30-50	X30-50/Y	X30-50/B	X30-50/B/Y	X30-50/C	X30-50/C/Y
50Vdc	50 Vdc	300 mA	300 mA	X30-50/50	X30-50/50/Y	X30-50/50/B	X30-50/50/B/Y	X30-50/50/C	X30-50/50/C/Y
75Vdc	-	400 mA		X30-75	X30-75/Y	X30-75/B	X30-75/B/Y	X30-75/C	X30-75/C/Y
75 Vdc	75 Vdc	200 mA	200 mA	X30-75/75	X30-75/75/Y	X30-75/75/B	X30-75/75/B/Y	X30-75/75/C	X30-75/75/C/Y
100 Vdc	-	300 mA	-	X30-100	X30-100/Y	X30-100/B	X30-100/B/Y	X30-100/C	X30-100/C/Y
100 Vdc	100Vdc	150 mA	150 mA	X30-100/100	X30-100/100/Y	X30-100/100/B	X30-100/100/B/Y	X30-100/100/C	X30-100/100/C/Y
150 Vdc	-	200 mA	-	X30-150	X30-150/Y	X30-150/B	X30-150/B/Y	X30-150/C	X30-150/C/Y
150 Vdc	150 Vdc	100 mA	100 mA	X30-150/150	X30-150/150/Y	X30-150/150/B	X30-150/150/B/Y	X30-150/150/C	X30-150/150/C/Y
200 Vdc	-	150 mA	-	X30-200	X30-200/Y	X30-200/B	X30-200/B/Y	X30-200/C	X30-200/C/Y
200Vdc	200Vdc	75 mA	75 mA	X30-200/200	X30-200/200/Y	X30-200/200/B	X30-200/200/B/Y	X30-200/200/C	X30-200/200/C/Y
300 Vdc	-	100 mA	-	X30-300	X30-300/Y	X30-300/B	X30-300/B/Y	X30-300/C	X30-300/C/Y
300 Vdc	300 Vdc	50 mA	50 mA	X30-300/300	X30-300/300/Y	X30-300/300/B	X30-300/300/B/Y	X30-300/300/C	X30-300/300/C/Y
400Vdc	-	75 mA	-	X30-400	X30-400/Y	X30-400/B	X30-400/B/Y	X30-400/C	X30-400/C/Y
400Vdc	400 Vdc	37 mA	37 mA	X30-400/400	X30-400/400/Y	X30-400/400/B	X30-400/400/B/Y	X30-400/400/C	X30-400/400/C/Y
500 Vdc	-	60 mA	-	X30-500	X30-500/Y	X30-500/B	X30-500/B/Y	X30-500/C	X30-500/C/Y
500 Vdc	500Vdc	30 mA	30 mA	X30-500/500	X30-500/500/Y	X30-500/500/B	X30-500/500/B/Y	X30-500/500/C	X30-500/500/C/Y

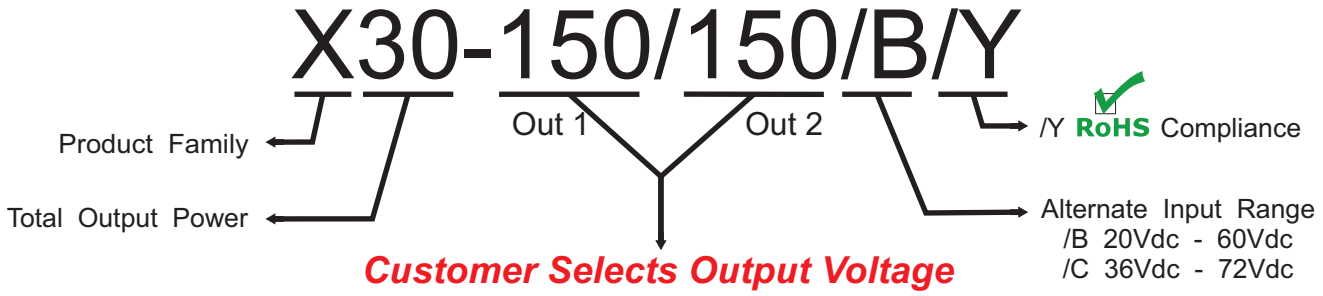

The X30 Series are designed such that the customer may order any output voltage from 24Vdc to 500Vdc at no additional charge.

X30 SERIES 30 WATT HIGH VOLTAGE DC/DC CONVERTERS

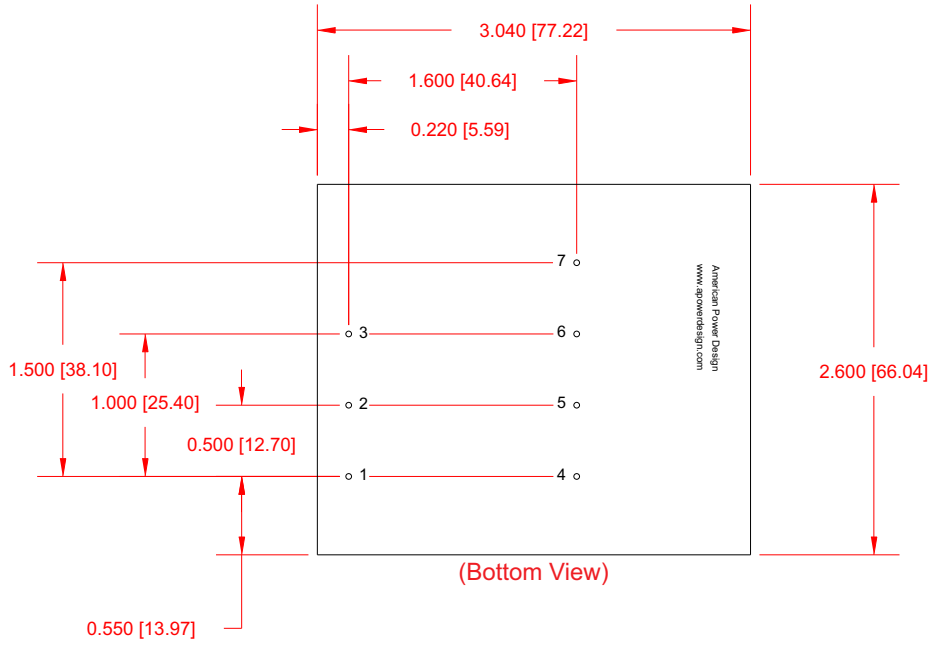

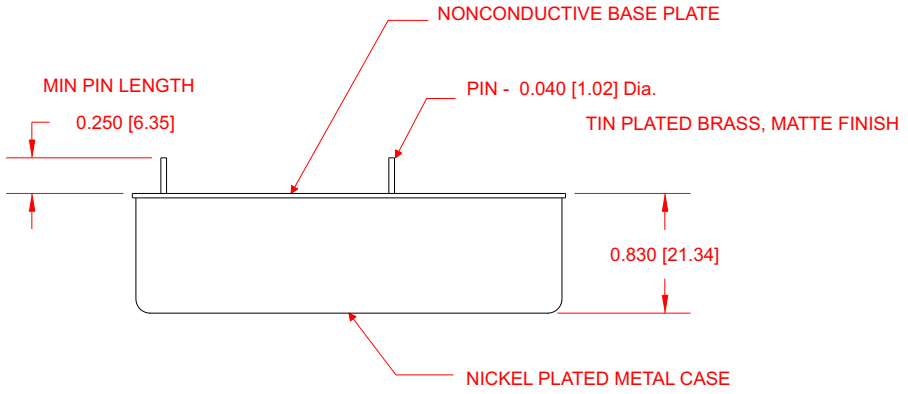

PIN #	SINGLE	DUAL
1	- Input	- Input
2	On/Off	On/Off
3	+ Input	+ Input
4	No Pin	+ Output 2
5	No Pin	- Output 2
6	- Output 1	- Output 1
7	+ Output 1	+ Output 1

Dimensions are in Inches
[Metric equivalents in brackets]

X30 SERIES 30 WATT HIGH VOLTAGE DC/DC CONVERTERS

APPLICATION NOTES

INPUT AND OUTPUT IMPEDANCE

The X30 Series of power converters have been designed to be stable with no external capacitors when used in low inductance input and output circuits. However, in some applications, the inductance associated with the distribution from the power source to the input of the converter can affect the stability of the converter. The addition of a 100 µF electrolytic capacitor with an ESR <1 Ohm across the input helps ensure stability of the converter. In many applications, the user has to use decoupling capacitance at the load.

SHORT CIRCUIT PROTECTION

The X30 Series is equipped with short circuit protection. The converter will fold-back the input power whenever a short circuit is applied to its output and automatically recover after the overload condition is removed.

ISOLATION

The output(s) of the X30 Series is galvanically isolated from both the input and case, capacitance is < 160pF and resistance is > 10G Ohm.

In the case of dual's, the outputs are independently isolated from one another as well as the input and case.

RIPPLE AND NOISE

Figure below shows a typical output voltage ripple waveform, measured at full rated load current with no additional output filtering. External low ESR capacitors may be added across output to further reduce ripple.

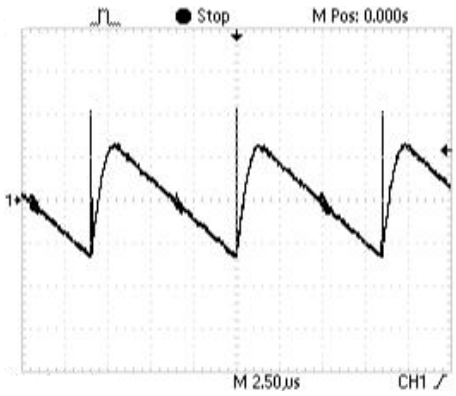

STARTUP TRANSIENT

Figure below shows a typical output voltage during turn-on, measured at 20% load current with no additional output filtering.

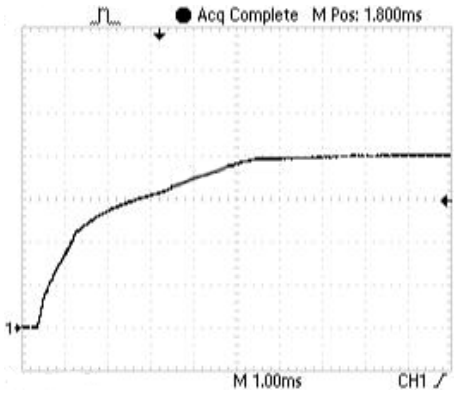

Figure below shows a typical output voltage during turn-on, measured at full rated load current with no additional output filtering.

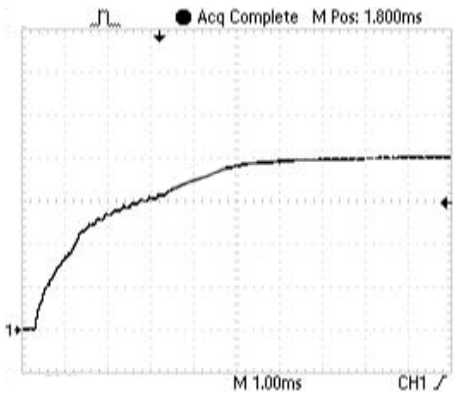

X30 SERIES 30 WATT HIGH VOLTAGE DC/DC CONVERTERS

APPLICATION NOTES

INRUSH CURRENT

The inrush current of the X30 Series has been kept as low as possible. However, a series resistor may be inserted in the input line to limit this current further.

LOAD TRANSIENT

Figure below shows a typical output voltage response, measured during a transition from full rated load current to no load current with no additional output filtering.

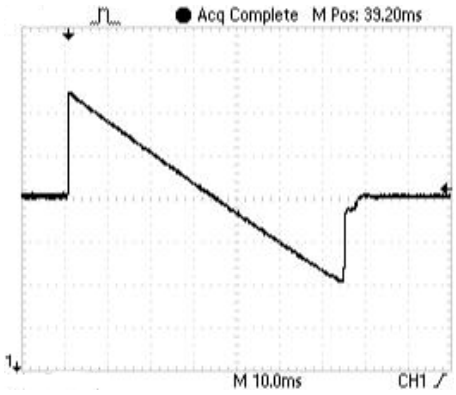

Figure below shows a typical output voltage response, measured during a transition from no load current to full rated load current with no additional output filtering.

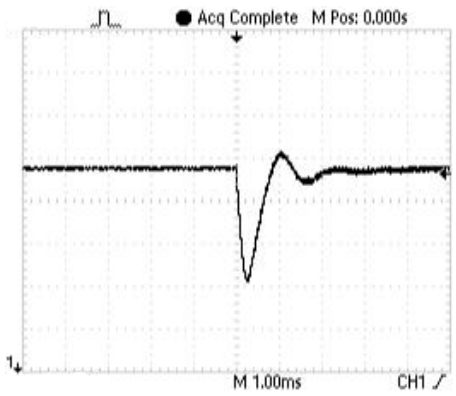

REMOTE ON/OFF CONTROL

The On/Off control pin allows the user to shut down the converter mechanically or logically using a relay or a TTL or CMOS logic signal.

Connect Remote On/Off pin to -Input when not in use to ensure proper operation.

Resistor R1 can be calculated by:

$$R1 = \frac{(+\text{Input} - 5)}{1mA}$$

Converter Off: Vc >3Vdc
Converter On: Vc <1.5Vdc

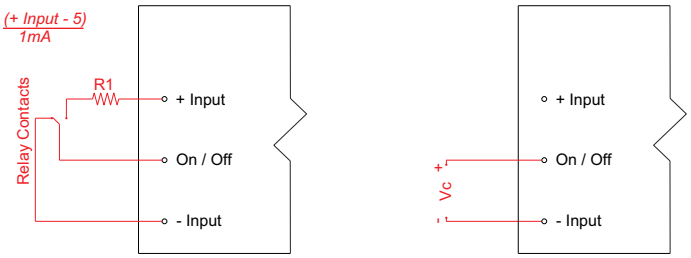

NOTE:
Do not exceed 6Vdc on remote On/Off. otherwise, the supply may be permanently damaged.

OUTPUT CONFIGURATIONS

Due to the unique independently isolated outputs of the X30 series both Output #1 and Output #2 may be connected in a wide variety configurations.
The Figures below are some examples.

Dual Positive Output

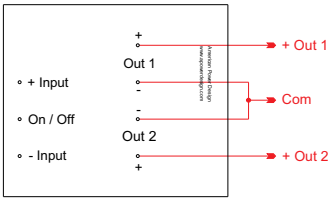

Dual Negitive Output

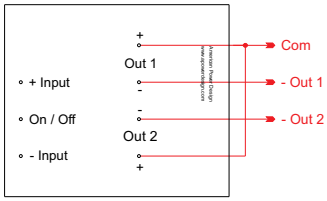

Bipolar Output

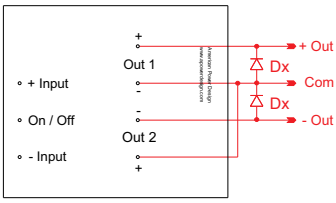

Outputs > 500Vdc

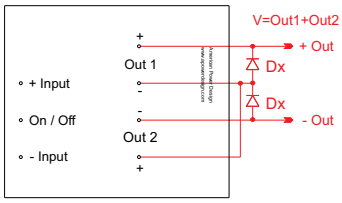

NOTE:
The ratings of Dx should be 1.5 times the maximum current and voltage expected in each branch.

X30 SERIES 30 WATT HIGH VOLTAGE DC/DC CONVERTERS

APPLICATION NOTES

CONNECTION IN PARALLEL

The figure below shows how to connect several single output units with equal nominal output voltage in parallel.

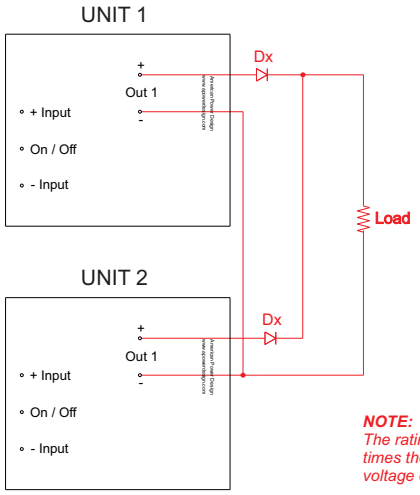

NOTE:
The ratings of Dx should be 1.5 times the maximum current and voltage expected in each branch.

The figure below shows how to connect several dual output units with equal nominal output voltage in parallel.

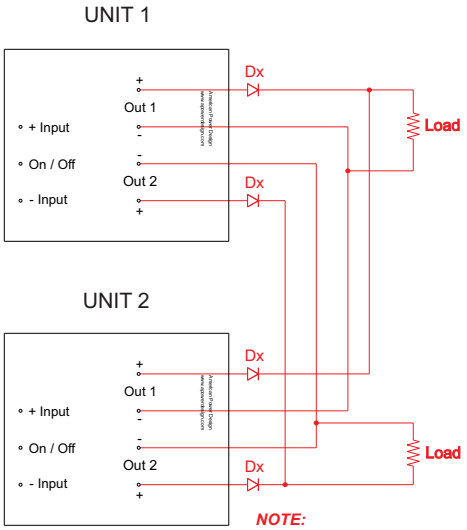

NOTE:
The ratings of Dx should be 1.5 times the maximum current and voltage expected in each branch.

CONNECTION IN SERIES

When connecting units in series, the highest achieved output voltage should remain below the rated isolation voltage.

Figure below shows how to connect multiple single output units in series with the use of shunt diodes.

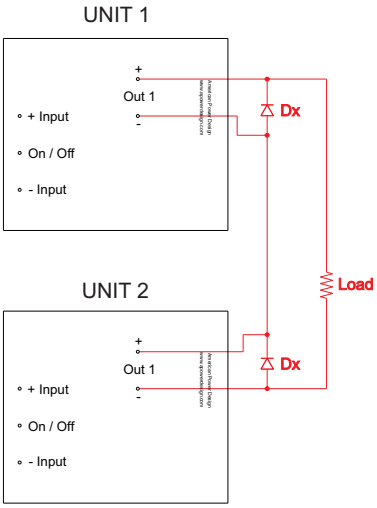

NOTE:
The ratings of Dx should be 1.5 times the maximum current and voltage expected in each branch.

Figure below shows how to connect multiple dual output units in series with the use of shunt diodes.

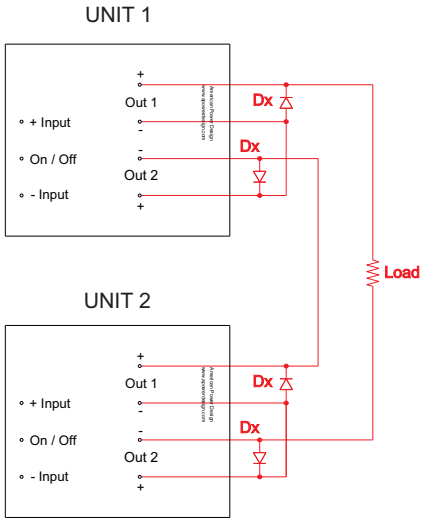

NOTE:
The ratings of Dx should be 1.5 times the maximum current and voltage expected in each branch.

X30 SERIES 30 WATT HIGH VOLTAGE DC/DC CONVERTERS

APPLICATION NOTES

CLEANING AGENTS

In order to avoid possible damage, any penetration of cleaning fluids must be prevented, since the power supplies are not hermetically sealed.

NUCLEAR AND MEDICAL APPLICATIONS

American Power Design products are not designed, intended for use in, or authorized for use as critical components in life support systems, equipment used in hazardous environments, or nuclear control systems without the express written consent of American Power Design, Inc.

TECHNICAL REVISIONS

The appearance of products, including safety agency certifications pictured on labels, may change depending on the date manufactured. Specifications are subject to change without notice.

SAFETY REQUIREMENTS

The converters are designed to meet North American and International safety regulatory requirements per UL 60950-1/CSA 22.2 No. 60950-1-07 Second Edition, IEC 60950-1: 2005, and EN 60950-1:2006. Basic Insulation is provided between input and output. To comply with safety agencies requirements, an input line fuse must be used external to the converter. The table below provides the recommended fuse rating for use with this family of products.

Input Voltage Range	Fuse Rating
9-36Vdc	5.5A
20-60Vdc	2.5A
36-72Vdc	1.5A

If one input fuse is used for a group of modules, the maximum fuse rating should not exceed 10A.

WARRANTY

All products manufactured by American Power Design, Inc. (APD) are warranted to be free of defects due to material or workmanship for a period of one year from date of shipment. At our option, APD will repair or replace any non-conforming product.
APD expressly disclaims any liability for consequential or incidental damages resulting from the use or misuse of its products by the purchaser or others.
This warranty is in lieu of all warranties expressed or implied, including the warranties of merchantability. No other warranties, obligations, or liabilities are expressed or implied.
All products being returned for repair require a return material authorization(RMA) assigned by APD prior to return shipment.

American Power Design, Inc.

"The best high voltage design solution"

RoHS

X50 SERIES 50 WATT HIGH VOLTAGE DC/DC CONVERTERS

FEATURES

- Customer Selects Output Voltage
- Ultra Wide Input Ranges
  (9-36Vdc , 20-60Vdc , 36-72Vdc)
- Efficiency 87% (typ.)
- Independently Isolated Outputs
- Six-Sided Shielded Case
- Remote On/Off Control
- Continuous Short Circuit Protection

The X50 Series of DC/DC converters accepts ultra wide input ranges of 9-36 Vdc, 20-60 Vdc and 36-72 Vdc. Outputs are independently isolated. In the case of duals, up to 40 watts may be taken from either output. All models will tolerate a short circuit indefinitely. Also included is a Pi input filter and remote on/off.

ELECTRICAL SPECIFICATIONS

Voltage Accuracy	+/- 1%
Line Regulation	+/- 0.1%
Load Regulation	+/- 0.3%
Output Ripple	< 0.4% P-P
Input Filter	Pi Network
Efficiency	87% (typ.)
Short Circuit Protection	Continuous
Switching Frequency	120 kHz
Isolation (Input-Output(1)-Output(2)-Case)	1000 Vdc
Input / Output Capacitance	< 100pF

GENERAL SPECIFICATIONS

Temp. Stability	+/-0.02%/°C
Temp. (Operating , Case)	-45 to +85°C
Temp. (Storage)	-55 to +100°C
Logic Shutdown	Logic 0 (on)
EMI/RFI	Six Sided Shield
Derating	None
Cooling	Free-Air Convection

PHYSICAL SPECIFICATIONS

Dimensions	2.57 x 4.57 x 0.84 inches
Weight	12.7 Oz
Case Material	Black Coated Metal *(With Non-Conductive Base Plate)*

X50 SERIES 50 WATT HIGH VOLTAGE DC/DC CONVERTERS

REPRESENTATIVE MODEL LISTING

OUTPUT SPECS				MODEL NUMBER / INPUT RANGE					
VOLTAGE		CURRENT		9-36VDC		20-60VDC		36-72VDC	
OUT #1	OUT #2	OUT #1	OUT #2	Non-RoHs	RoHs	Non-RoHs	RoHs	Non-RoHs	RoHs
48 Vdc	-	1 A	-	X50-48	X50-48/Y	X50-48/B	X50-48/B/Y	X50-48/C	X50-48/C/Y
48 Vdc	48Vdc	500 mA	500 mA	X50-48/48	X50-48/48/Y	X50-48/48/B	X50-48/48/B/Y	X50-48/48/C	X50-48/48/C/Y
50 Vdc	-	1 A	-	X50-50	X50-50/Y	X50-50/B	X50-50/B/Y	X50-50/C	X50-50/C/Y
50Vdc	50 Vdc	500 mA	500 mA	X50-50/50	X50-50/50/Y	X50-50/50/B	X50-50/50/B/Y	X50-50/50/C	X50-50/50/C/Y
75Vdc	-	666 mA		X50-75	X50-75/Y	X50-75/B	X50-75/B/Y	X50-75/C	X50-75/C/Y
75 Vdc	75 Vdc	333 mA	333 mA	X50-75/75	X50-75/75/Y	X50-75/75/B	X50-75/75/B/Y	X50-75/75/C	X50-75/75/C/Y
100 Vdc	-	500 mA	-	X50-100	X50-100/Y	X50-100/B	X50-100/B/Y	X50-100/C	X50-100/C/Y
100 Vdc	100Vdc	250 mA	250 mA	X50-100/100	X50-100/100/Y	X50-100/100/B	X50-100/100/B/Y	X50-100/100/C	X50-100/100/C/Y
150 Vdc	-	333 mA	-	X50-150	X50-150/Y	X50-150/B	X50-150/B/Y	X50-150/C	X50-150/C/Y
150 Vdc	150 Vdc	166 mA	166 mA	X50-150/150	X50-150/150/Y	X50-150/150/B	X50-150/150/B/Y	X50-150/150/C	X50-150/150/C/Y
200 Vdc	-	250 mA	-	X50-200	X50-200/Y	X50-200/B	X50-200/B/Y	X50-200/C	X50-200/C/Y
200Vdc	200Vdc	125 mA	125 mA	X50-200/200	X50-200/200/Y	X50-200/200/B	X50-200/200/B/Y	X50-200/200/C	X50-200/200/C/Y
300 Vdc	-	166 mA	-	X50-300	X50-300/Y	X50-300/B	X50-300/B/Y	X50-300/C	X50-300/C/Y
300 Vdc	300 Vdc	83 mA	83 mA	X50-300/300	X50-300/300/Y	X50-300/300/B	X50-300/300/B/Y	X50-300/300/C	X50-300/300/C/Y
400Vdc	-	125 mA	-	X50-400	X50-400/Y	X50-400/B	X50-400/B/Y	X50-400/C	X50-400/C/Y
400Vdc	400 Vdc	62 mA	62 mA	X50-400/400	X50-400/400/Y	X50-400/400/B	X50-400/400/B/Y	X50-400/400/C	X50-400/400/C/Y
500 Vdc	-	100 mA	-	X50-500	X50-500/Y	X50-500/B	X50-500/B/Y	X50-500/C	X50-500/C/Y
500 Vdc	500Vdc	50 mA	50 mA	X50-500/500	X50-500/500/Y	X50-500/500/B	X50-500/500/B/Y	X50-500/500/C	X50-500/500/C/Y

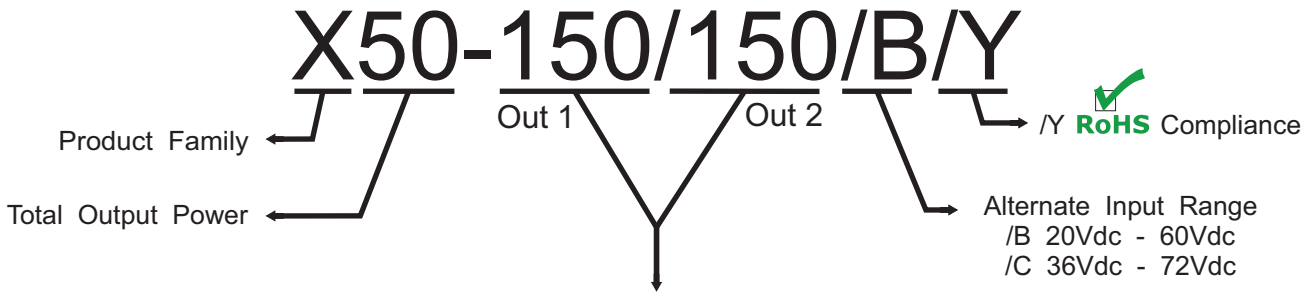

Customer Selects Output Voltage

The X50 Series are designed such that the customer may order any output voltage from 48Vdc to 500Vdc at no additional charge.

X50 SERIES 50 WATT HIGH VOLTAGE DC/DC CONVERTERS

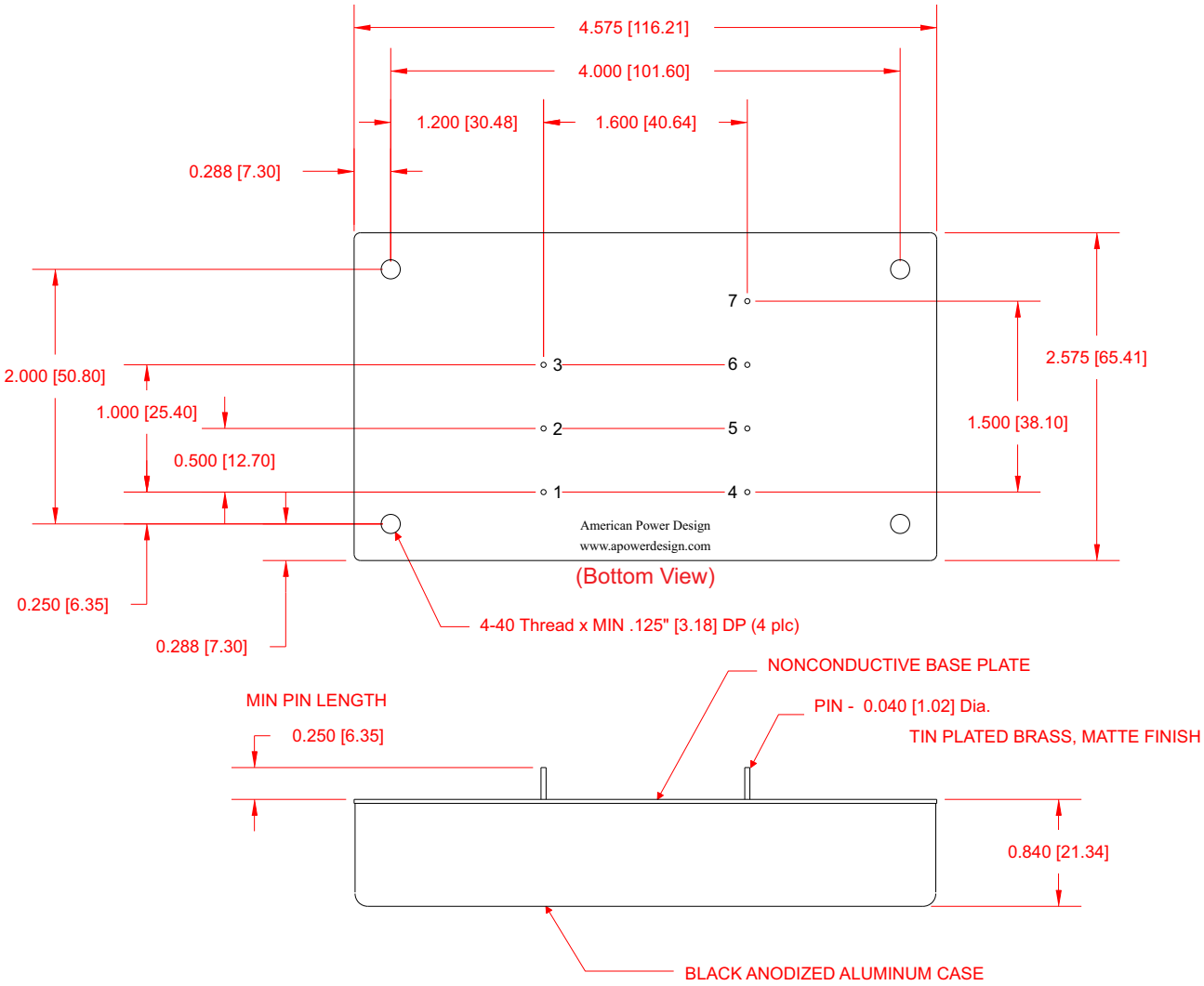

PIN #	SINGLE	DUAL
1	- Input	- Input
2	On/Off	On/Off
3	+ Input	+ Input
4	No Pin	+ Output 2
5	No Pin	- Output 2
6	- Output 1	- Output 1
7	+ Output 1	+ Output 1

Dimensions are in Inches
[Metric equivalents in brackets]

X50 SERIES 50 WATT HIGH VOLTAGE DC/DC CONVERTERS

APPLICATION NOTES

INPUT AND OUTPUT IMPEDANCE

The X50 Series of power converters have been designed to be stable with no external capacitors when used in low inductance input and output circuits. However, in some applications, the inductance associated with the distribution from the power source to the input of the converter can affect the stability of the converter. The addition of a 100 µF electrolytic capacitor with an ESR <1 Ohm across the input helps ensure stability of the converter. In many applications, the user has to use decoupling capacitance at the load.

SHORT CIRCUIT PROTECTION

The X50 Series is equipped with short circuit protection. The converter will fold-back the input power whenever a short circuit is applied to its output and automatically recover after the overload condition is removed.

ISOLATION

The output(s) of the X50 Series is galvanically isolated from both the input and case, capacitance is < 100 pF and resistance is > 10G Ohm.

In the case of dual's, the outputs are independently isolated from one another as well as the input and case.

RIPPLE AND NOISE

Figure below shows a typical output voltage ripple waveform, measured at full rated load current with no additional output filtering. External low ESR capacitors may be added across output to further reduce ripple.

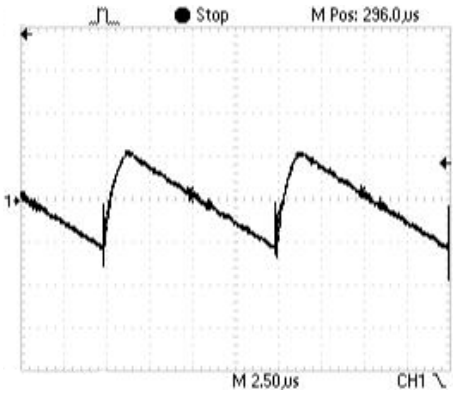

STARTUP TRANSIENT

Figure below shows a typical output voltage during turn-on, measured at 20% load current with no additional output filtering.

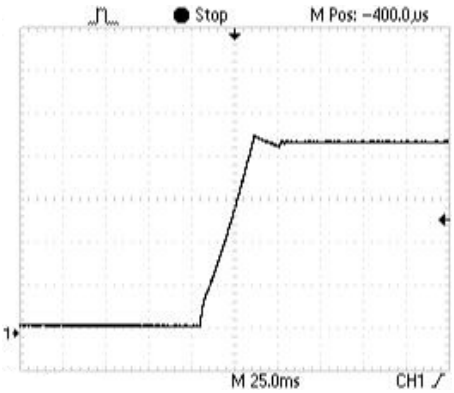

Figure below shows a typical output voltage during turn-on, measured at full rated load current with no additional output filtering.

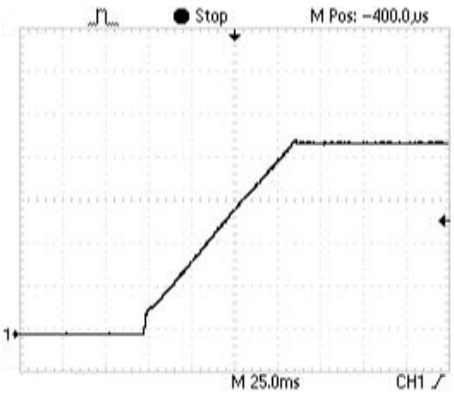

X50 SERIES 50 WATT HIGH VOLTAGE DC/DC CONVERTERS

APPLICATION NOTES

INRUSH CURRENT

The inrush current of the X50 Series has been kept as low as possible. However, a series resistor may be inserted in the input line to limit this current further.

LOAD TRANSIENT

Figure below shows a typical output voltage response, measured during a transition from full rated load current to 20% load current with no additional output filtering.

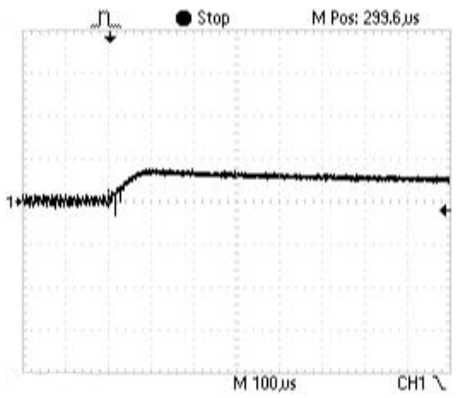

Figure below shows a typical output voltage response, measured during a transition from 20% load current to full rated load current with no additional output filtering.

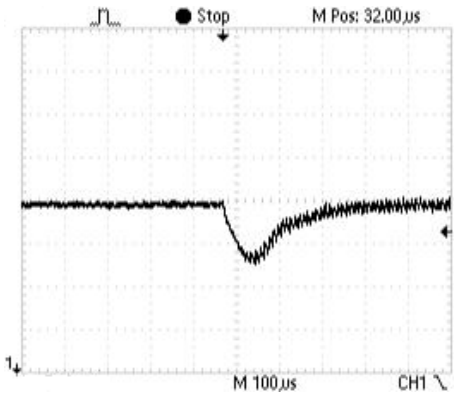

REMOTE ON/OFF CONTROL

The On/Off control pin allows the user to shut down the converter mechanically or logically using a relay or a TTL or CMOS logic signal.

Connect Remote On/Off pin to -Input when not in use to ensure proper operation.

Resistor R1 can be calculated by:

$$R1 = \frac{(+\text{Input} - 5)}{1mA}$$

Converter Off: Vc >3Vdc
Converter On: Vc <1.5Vdc

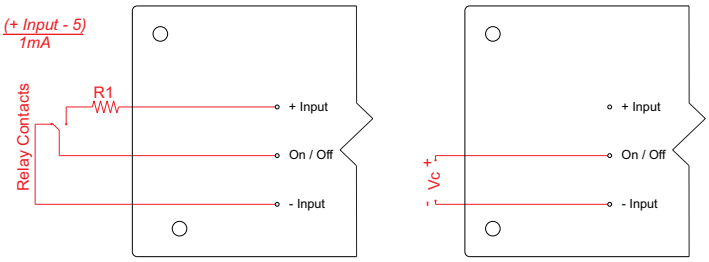

NOTE:
Do not exceed 6Vdc on remote On/Off. otherwise, the supply may be permanently damaged.

OUTPUT CONFIGURATIONS

Due to the unique independently isolated outputs of the X50 series both Output #1 and Output #2 may be connected in a wide variety configurations.
The Figures below are some examples.

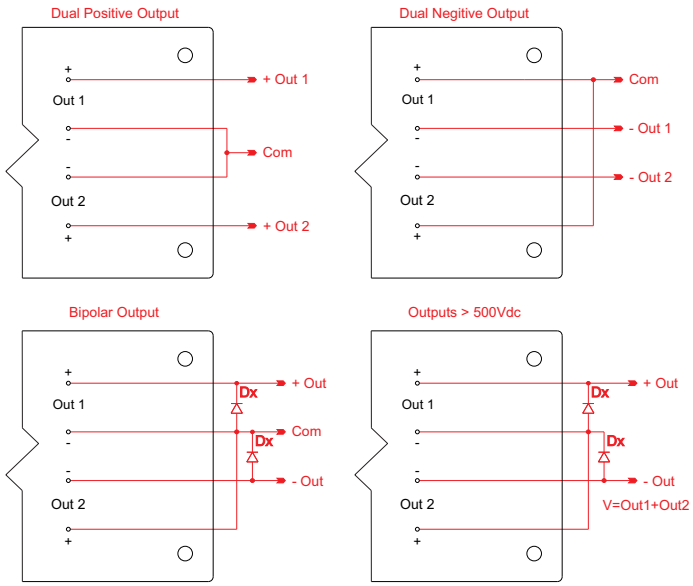

NOTE:
The ratings of Dx should be 1.5 times the maximum current and voltage expected in each branch.

X50 SERIES 50 WATT HIGH VOLTAGE DC/DC CONVERTERS

APPLICATION NOTES

CONNECTION IN PARALLEL

The figure below shows how to connect several single output units with equal nominal output voltage in parallel.

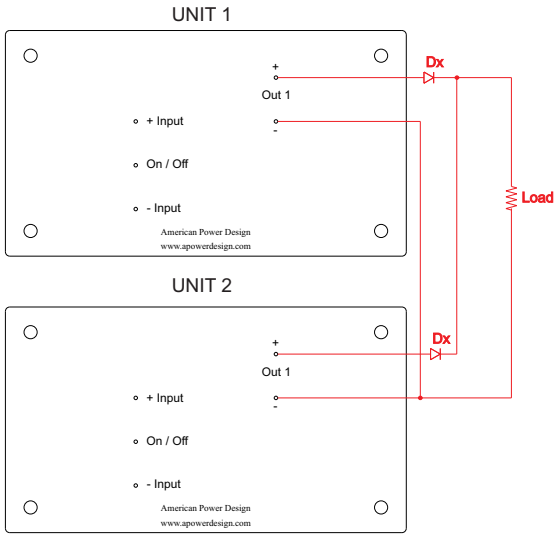

NOTE:
The ratings of Dx should be 1.5 times the maximum current and voltage expected in each branch.

The figure below show how to connect several dual output units with equal nominal output voltage in parallel.

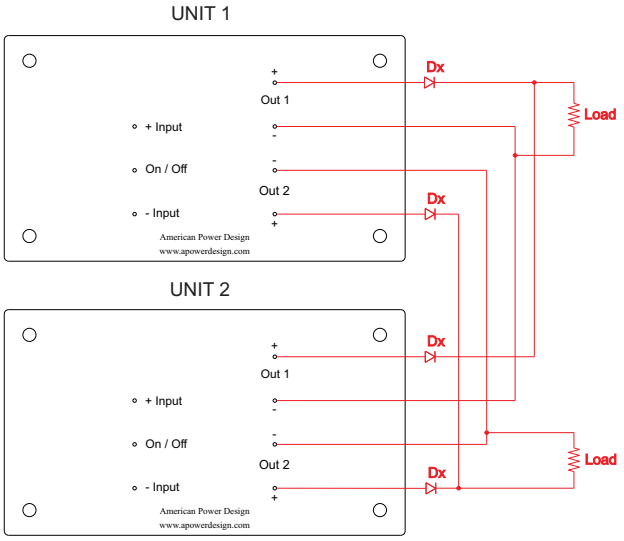

NOTE:
The ratings of Dx should be 1.5 times the maximum current and voltage expected in each branch.

CONNECTION IN SERIES

When connecting units in series, the highest achieved output voltage should remain below the rated isolation voltage.

Figure below shows how to connect multiple single output units in series with the use of shunt diodes.

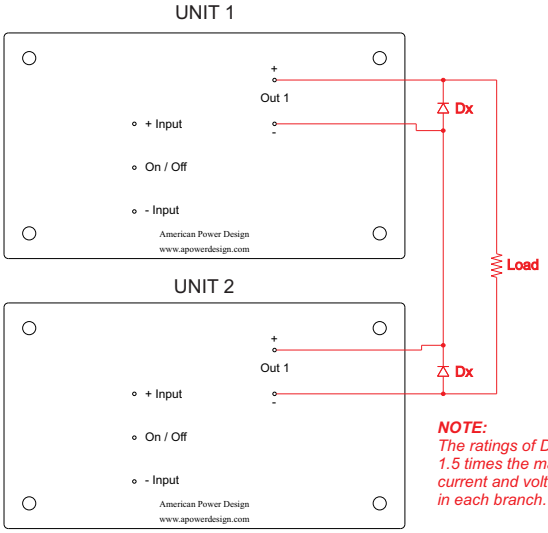

NOTE:
The ratings of Dx should be 1.5 times the maximum current and voltage expected in each branch.

Figure below shows how to connect multiple dual output units in series with the use of shunt diodes.

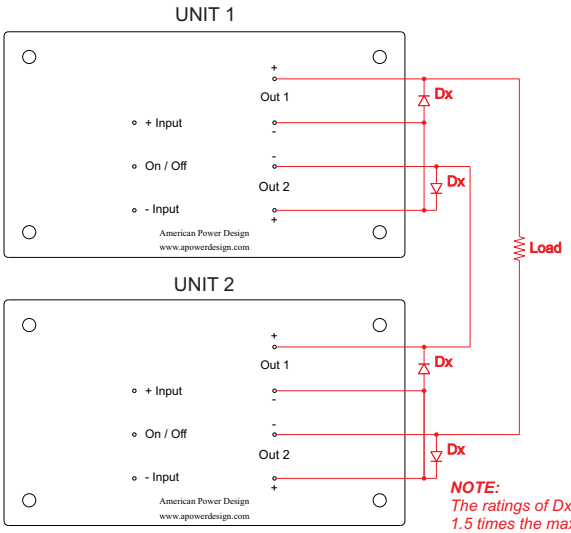

NOTE:
The ratings of Dx should be 1.5 times the maximum current and voltage in each branch.

X50 SERIES 50 WATT HIGH VOLTAGE DC/DC CONVERTERS

APPLICATION NOTES

CLEANING AGENTS

In order to avoid possible damage, any penetration of cleaning fluids must be prevented, since the power supplies are not hermetically sealed.

NUCLEAR AND MEDICAL APPLICATIONS

American Power Design products are not designed, intended for use in, or authorized for use as critical components in life support systems, equipment used in hazardous environments, or nuclear control systems without the express written consent of American Power Design, Inc.

TECHNICAL REVISIONS

The appearance of products, including safety agency certifications pictured on labels, may change depending on the date manufactured. Specifications are subject to change without notice.

SAFETY REQUIREMENTS

The converters are designed to meet North American and International safety regulatory requirements per UL 60950-1/CSA 22.2 No. 60950-1-07 Second Edition, IEC 60950-1: 2005, and EN 60950-1:2006. Basic Insulation is provided between input and output. To comply with safety agencies requirements, an input line fuse must be used external to the converter. The table below provides the recommended fuse rating for use with this family of products.

Input Voltage Range	Fuse Rating
9-36Vdc	7 A
20-60Vdc	3.5 A
36-72Vdc	2 A

If one input fuse is used for a group of modules, the maximum fuse rating should not exceed 20A.

WARRANTY

All products manufactured by American Power Design, Inc. (APD) are warranted to be free of defects due to material or workmanship for a period of one year from date of shipment. At our option, APD will repair or replace any non-conforming product.
APD expressly disclaims any liability for consequential or incidental damages resulting from the use or misuse of its products by the purchaser or others.
This warranty is in lieu of all warranties expressed or implied, including the warranties of merchantability. No other warranties, obligations, or liabilities are expressed or implied.
All products being returned for repair require a return material authorization(RMA) assigned by APD prior to return shipment.

American Power Design, Inc.

"The best high voltage design solution"

RoHS

X150 SERIES 150 WATT HIGH VOLTAGE DC/DC CONVERTERS

FEATURES

- Customer Selects Output Voltage
- Ultra Wide Input Ranges
  (18-36Vdc , 20-60Vdc , 36-72Vdc)
- Efficiency 90% (typ.)
- Independently Isolated Outputs
- Six-Sided Shielded Case
- Remote On/Off Control
- Continuous Short Circuit Protection

The X150 Series of DC/DC converters accepts ultra wide input ranges of 18-36 Vdc, 20-60 Vdc and 36-72 Vdc. Outputs are independently isolated. In the case of duals, up to 120 watts may be taken from either output. All models will tolerate a short circuit indefinitely. Also included is a Pi input filter and remote on/off.

ELECTRICAL SPECIFICATIONS

Voltage Accuracy	+/- 1%
Line Regulation	+/- 0.2%
Load Regulation	+/- 0.3%
Output Ripple	< 0.3% P-P
Input Filter	Pi Network
Efficiency	90% (typ.)
Short Circuit Protection	Continuous
Switching Frequency	120 kHz
Isolation (Input-Output(1)-Output(2)-Case)	1000 Vdc
Input / Output Capacitance	< 200pF

GENERAL SPECIFICATIONS

Temp. Stability	+/-0.02%/°C
Temp. (Operating , Case)	-45 to +85°C
Temp. (Storage)	-55 to +100°C
Logic Shutdown	Logic 0 (on)
EMI/RFI	Six Sided Shield
Derating	None
Cooling	Free-Air Convection

PHYSICAL SPECIFICATIONS

Dimensions	3.5 x 5.5 x 0.92 inches
Weight	18.5 Oz
Case Material	Black Coated Metal *(With Non-Conductive Base Plate)*

X150 SERIES 150 WATT HIGH VOLTAGE DC/DC CONVERTERS

REPRESENTATIVE MODEL LISTING

OUTPUT SPECS				MODEL NUMBER / INPUT RANGE					
VOLTAGE		CURRENT		18-36VDC		20-60VDC		36-72VDC	
OUT #1	OUT #2	OUT #1	OUT #2	Non-RoHs	RoHs	Non-RoHs	RoHs	Non-RoHs	RoHs
48 Vdc	-	3 A	-	X150-48	X150-48/Y	X150-48/B	X150-48/B/Y	X150-48/C	X150-48/C/Y
48 Vdc	48Vdc	1.5 A	1.5 A	X150-48/48	X150-48/48/Y	X150-48/48/B	X150-48/48/B/Y	X150-48/48/C	X150-48/48/C/Y
50 Vdc	-	3 A	-	X150-50	X150-50/Y	X150-50/B	X150-50/B/Y	X150-50/C	X150-50/C/Y
50Vdc	50 Vdc	1.5 A	1.5 A	X150-50/50	X150-50/50/Y	X150-50/50/B	X150-50/50/B/Y	X150-50/50/C	X150-50/50/C/Y
75Vdc	-	2 A		X150-75	X150-75/Y	X150-75/B	X150-75/B/Y	X150-75/C	X150-75/C/Y
75 Vdc	75 Vdc	1 A	1 A	X150-75/75	X150-75/75/Y	X150-75/75/B	X150-75/75/B/Y	X150-75/75/C	X150-75/75/C/Y
100 Vdc	-	1.5 A	-	X150-100	X150-100/Y	X150-100/B	X150-100/B/Y	X150-100/C	X150-100/C/Y
100 Vdc	100Vdc	750 mA	750 mA	X150-100/100	X150-100/100/Y	X150-100/100/B	X150-100/100/B/Y	X150-100/100/C	X150-100/100/C/Y
150 Vdc	-	1 A	-	X150-150	X150-150/Y	X150-150/B	X150-150/B/Y	X150-150/C	X150-150/C/Y
150 Vdc	150 Vdc	500 mA	500 mA	X150-150/150	X150-150/150/Y	X150-150/150/B	X150-150/150/B/Y	X150-150/150/C	X150-150/150/C/Y
200 Vdc	-	750 mA	-	X150-200	X150-200/Y	X150-200/B	X150-200/B/Y	X150-200/C	X150-200/C/Y
200Vdc	200Vdc	375 mA	375 mA	X150-200/200	X150-200/200/Y	X150-200/200/B	X150-200/200/B/Y	X150-200/200/C	X150-200/200/C/Y
300 Vdc	-	500 mA	-	X150-300	X150-300/Y	X150-300/B	X150-300/B/Y	X150-300/C	X150-300/C/Y
300 Vdc	300 Vdc	250 mA	250 mA	X150-300/300	X150-300/300/Y	X150-300/300/B	X150-300/300/B/Y	X150-300/300/C	X150-300/300/C/Y
400Vdc	-	375 mA	-	X150-400	X150-400/Y	X150-400/B	X150-400/B/Y	X150-400/C	X150-400/C/Y
400Vdc	400 Vdc	187 mA	187 mA	X150-400/400	X150-400/400/Y	X150-400/400/B	X150-400/400/B/Y	X150-400/400/C	X150-400/400/C/Y
500 Vdc	-	300 mA	-	X150-500	X150-500/Y	X150-500/B	X150-500/B/Y	X150-500/C	X150-500/C/Y
500 Vdc	500Vdc	150 mA	150 mA	X150-500/500	X150-500/500/Y	X150-500/500/B	X150-500/500/B/Y	X150-500/500/C	X150-500/500/C/Y

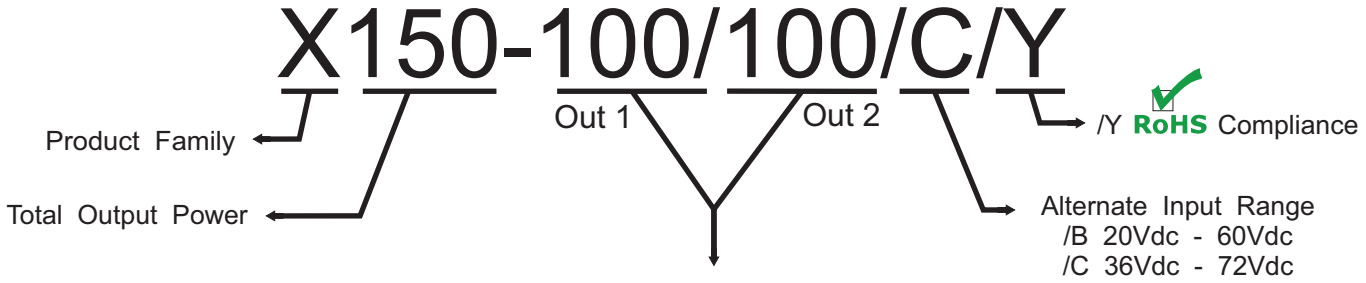

Customer Selects Output Voltage

The X150 Series are designed such that the customer may order any output voltage from 48Vdc to 500Vdc at no additional charge.

X150 SERIES 150 WATT HIGH VOLTAGE DC/DC CONVERTERS

STANDARD PC MOUNT

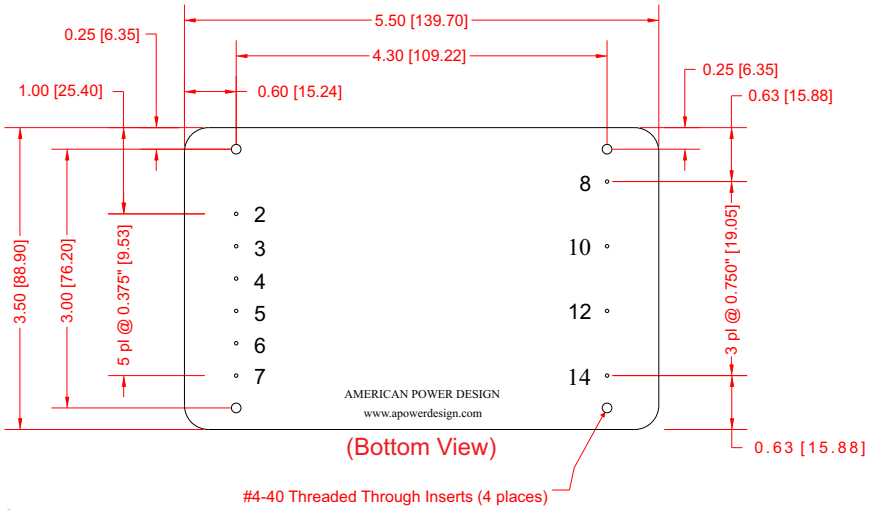

Dimensions are in Inches
[Metric equivalents in brackets]

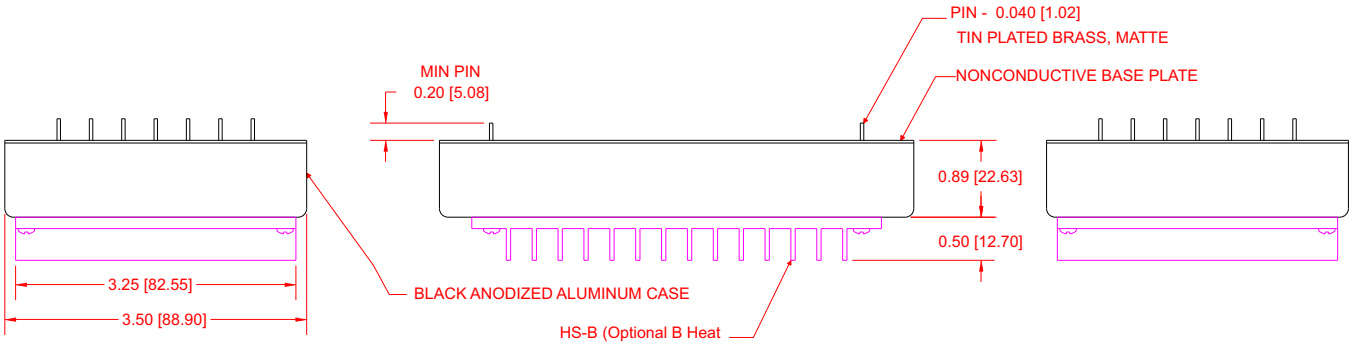

PIN #	FUNCTION		PIN #	FUNCTION	
	Single	Dual		Single	Dual
1	No Pin	No Pin	8	No Pin	Output 2 +
2	- Input	- Input	9	No Pin	No Pin
3	- Input	- Input	10	No Pin	Output 2 -
4	+ Input	+ Input	11	No Pin	No Pin
5	+ Input	+ Input	12	Output 1 +	Output 1 +
6	On / Off	On / Off	13	No Pin	No Pin
7	Case	Case	14	Output 1 -	Output 1 -

X150 SERIES 150 WATT HIGH VOLTAGE DC/DC CONVERTERS

-TS CHASSIS MOUNT OPTION

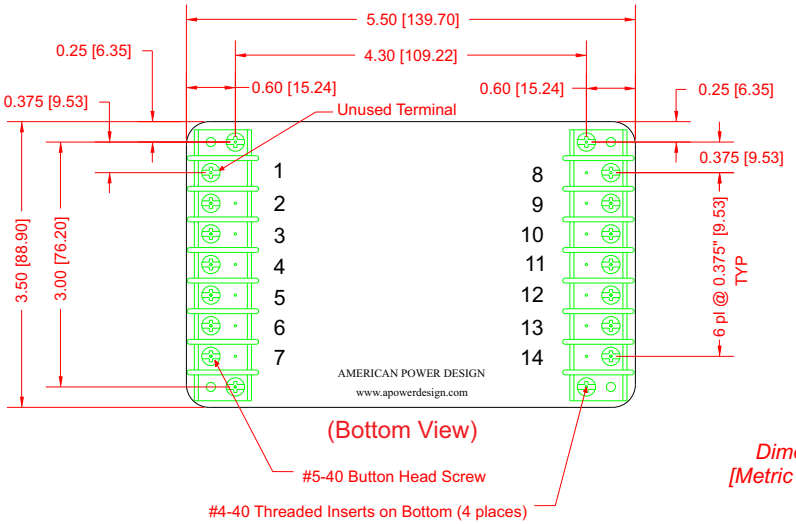

Dimensions are in Inches
[Metric equivalents in brackets]

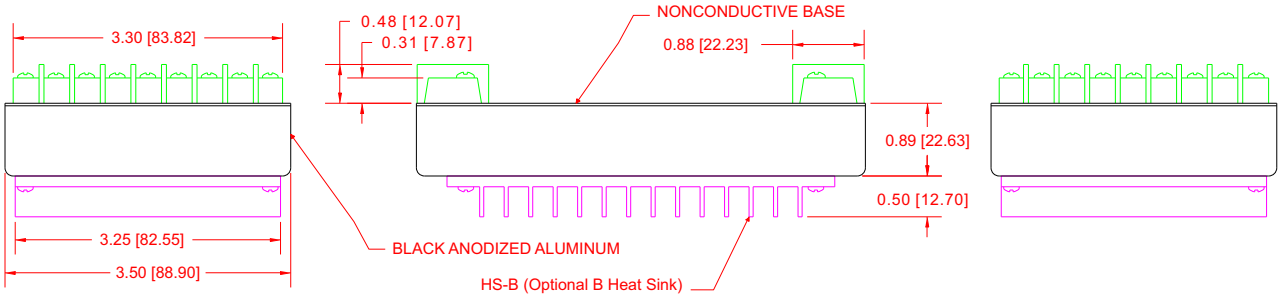

PIN #	FUNCTION		PIN #	FUNCTION	
	Single	Dual		Single	Dual
1	N/C	N/C	8	N/C	Output 2 +
2	- Input	- Input	9	N/C	N/C
3	- Input	- Input	10	N/C	Output 2 -
4	+ Input	+ Input	11	N/C	N/C
5	+ Input	+ Input	12	Output 1 +	Output 1 +
6	On / Off	On / Off	13	N/C	N/C
7	Case	Case	14	Output 1 -	Output 1 -

X150 SERIES 150 WATT HIGH VOLTAGE DC/DC CONVERTERS

APPLICATION NOTES

INPUT AND OUTPUT IMPEDANCE

The X150 Series of power converters have been designed to be stable with no external capacitors when used in low inductance input and output circuits. However, in some applications, the inductance associated with the distribution from the power source to the input of the converter can affect the stability of the converter. The addition of a 100 µF electrolytic capacitor with an ESR <1 Ohm across the input helps ensure stability of the converter. In many applications, the user has to use decoupling capacitance at the load.

SHORT CIRCUIT PROTECTION

The X150 Series is equipped with short circuit protection. The converter will fold-back the input power whenever a short circuit is applied to its output and automatically recover after the overload condition is removed.

ISOLATION

The output(s) of the X150 Series is galvanically isolated from both the input and case, capacitance is < 200 pF and resistance is > 10G Ohm.

In the case of dual's, the outputs are independently isolated from one another as well as the input and case.

RIPPLE AND NOISE

Figure below shows a typical output voltage ripple waveform, measured at full rated load current with no additional output filtering. External low ESR capacitors may be added across output to further reduce ripple.

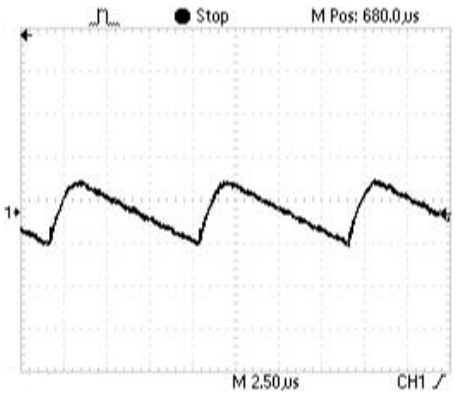

STARTUP TRANSIENT

Figure below shows a typical output voltage during turn-on, measured at no load current with no additional output filtering.

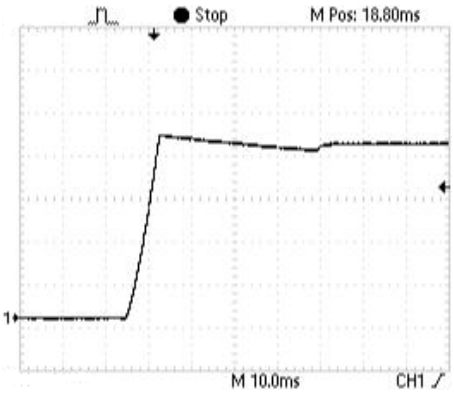

Figure below shows a typical output voltage during turn-on, measured at full rated load current with no additional output filtering.

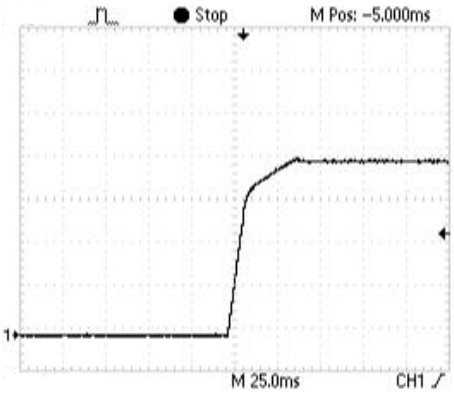

X150 SERIES 150 WATT HIGH VOLTAGE DC/DC CONVERTERS

APPLICATION NOTES

INRUSH CURRENT

The inrush current of the X150 Series has been kept as low as possible. However, a series resistor may be inserted in the input line to limit this current further.

LOAD TRANSIENT

Figure below shows a typical output voltage response, measured during a transition from full rated load current to no load current with no additional output filtering.

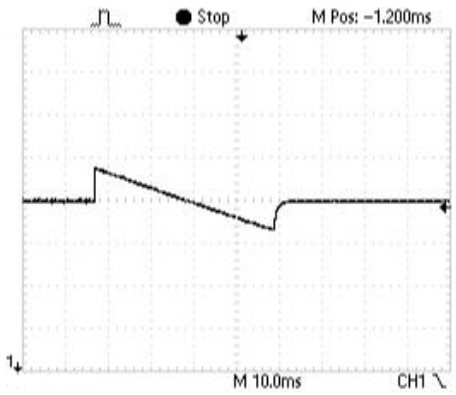

Figure below shows a typical output voltage response, measured during a transition from no load current to full rated load current with no additional output filtering.

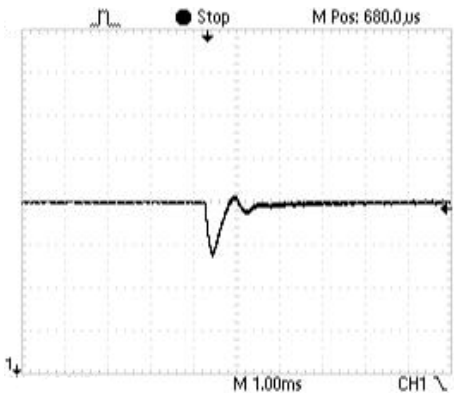

REMOTE ON/OFF CONTROL

The On/Off control pin allows the user to shut down the converter mechanically or logically using a relay or a TTL or CMOS logic signal.

Connect Remote On/Off pin to -Input when not in use to ensure proper operation.

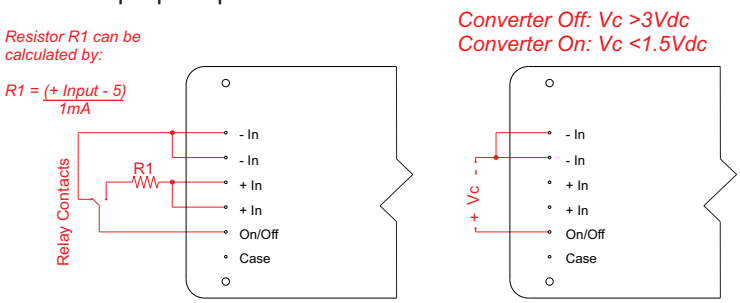

NOTE:
Do not exceed 6Vdc on remote On/Off. otherwise, the supply may be permanently damaged.

OUTPUT CONFIGURATIONS

Due to the unique independently isolated outputs of the X150 series both Output #1 and Output #2 may be connected in a wide variety configurations.
The Figures below are some examples.

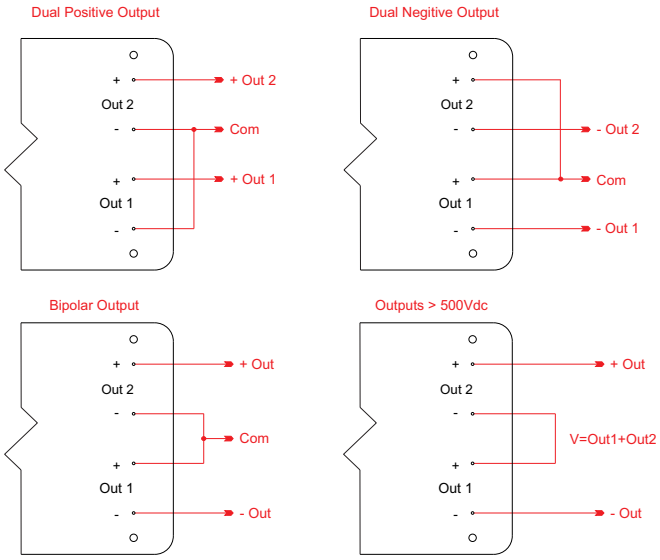

X150 SERIES 150 WATT HIGH VOLTAGE DC/DC CONVERTERS

APPLICATION NOTES

CONNECTION IN PARALLEL

The figure below shows how to connect several single output units with equal nominal output voltage in parallel.

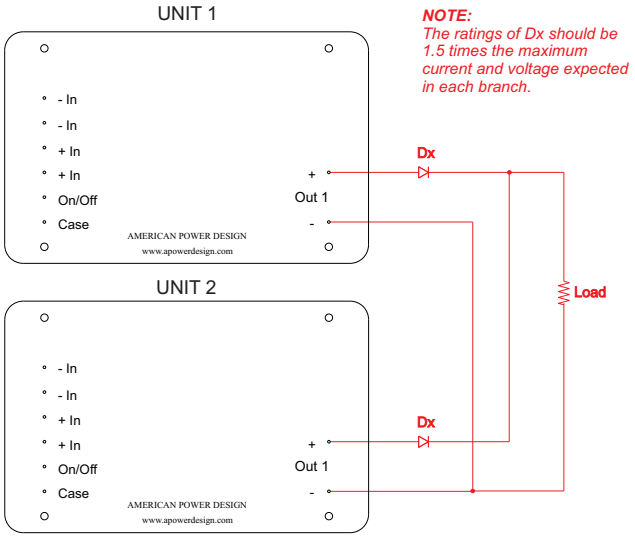

The figure below shows how to connect several dual output units with equal nominal output voltage in parallel.

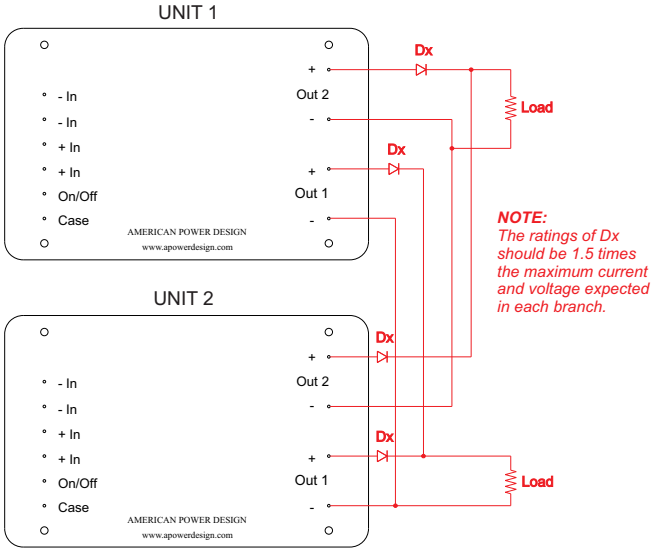

CONNECTION IN SERIES

When connecting units in series, the highest achieved output voltage should remain below the rated isolation voltage.

Figure below shows how to connect multiple single output units in series with the use of shunt diodes.

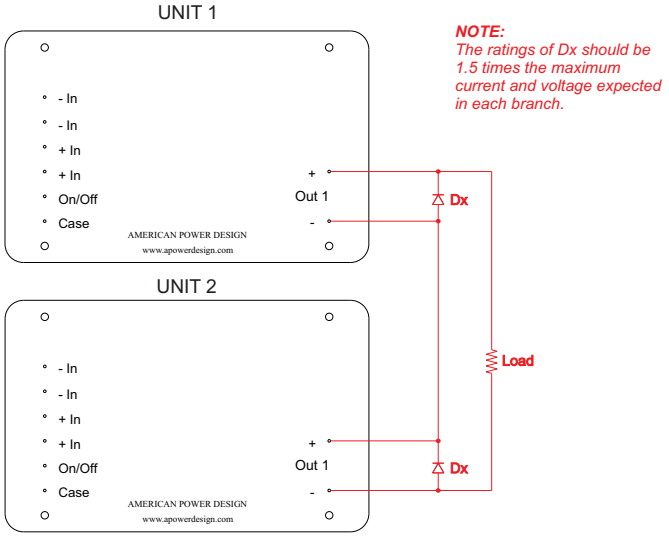

Figure below shows how to connect multiple dual output units in series with the use of shunt diodes.

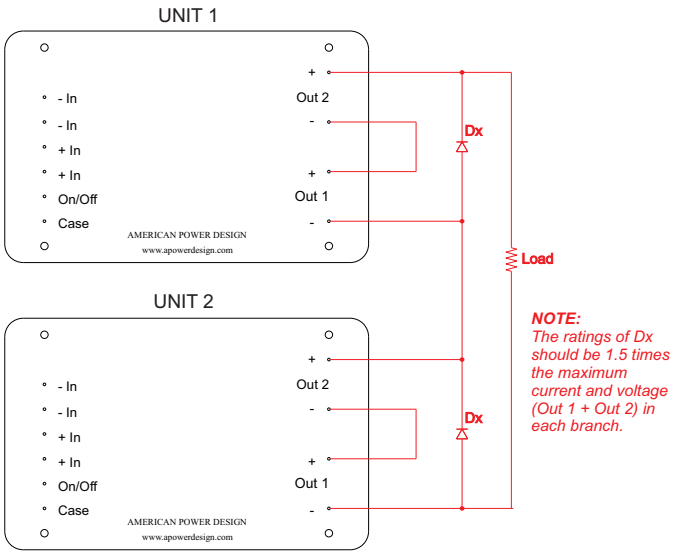

X150 SERIES 150 WATT HIGH VOLTAGE DC/DC CONVERTERS

APPLICATION NOTES

CLEANING AGENTS

In order to avoid possible damage, any penetration of cleaning fluids must be prevented, since the power supplies are not hermetically sealed.

NUCLEAR AND MEDICAL APPLICATIONS

American Power Design products are not designed, intended for use in, or authorized for use as critical components in life support systems, equipment used in hazardous environments, or nuclear control systems without the express written consent of American Power Design, Inc.

TECHNICAL REVISIONS

The appearance of products, including safety agency certifications pictured on labels, may change depending on the date manufactured. Specifications are subject to change without notice.

SAFETY REQUIREMENTS

The converters are designed to meet North American and International safety regulatory requirements per UL 60950-1/CSA 22.2 No. 60950-1-07 Second Edition, IEC 60950-1: 2005, and EN 60950-1:2006. Basic Insulation is provided between input and output. To comply with safety agencies requirements, an input line fuse must be used external to the converter. The table below provides the recommended fuse rating for use with this family of products.

Input Voltage Range	Fuse Rating
18-36Vdc	10 A
20-60Vdc	9 A
36-72Vdc	5 A

If one input fuse is used for a group of modules, the maximum fuse rating should not exceed 20A.

WARRANTY

All products manufactured by American Power Design, Inc. (APD) are warranted to be free of defects due to material or workmanship for a period of one year from date of shipment. At our option, APD will repair or replace any non-conforming product.
APD expressly disclaims any liability for consequential or incidental damages resulting from the use or misuse of its products by the purchaser or others.
This warranty is in lieu of all warranties expressed or implied, including the warranties of merchantability. No other warranties, obligations, or liabilities are expressed or implied.
All products being returned for repair require a return material authorization(RMA) assigned by APD prior to return shipment.

GLOSSARY OF TERMS

Absolute Maximum
The maximum condition which the power converter can withstand without permanently damaging the device. Usually applied to input voltage, output current/power, or case temperature.

Aging
The long term change in output voltage of a power supply over time with all other factors held constant, usually accelerated by temperature. Long term aging is most often expressed as a percentage per 1000 hours and short term aging as a percentage over the first 24 hours of operation.

Ambient Temperature
The temperature in the medium around a component and is measured some distance from the device (usually 0.5 inches) to be considered uniform.

Balun
An inductor used for impedance matching between a BALanced line and an UNbalanced line. It presents a high impedance to common mode signals and a low impedance to differential mode signals. A balun is sometimes used in series with the input line of switching power converters to suppress common mode noise currents.

Boost Converter - Topology
The boost circuit is a commonly used building block in converter design. The switch controls energy transfer from the input source, through the inductor, to the load. The output-to-input voltage ratio, is always greater than one and is ideally equal to the inverse of one minus the duty conduction cycle of the switch during continuous operation. The boost topology also requires an output energy storage capacitor to support the load current while the switch is on.

Buck Converter - Topology
The buck circuit is another commonly used building block in converter designs. In its basic form, without a transformer, the output voltage is always less than the input voltage. When the transistor is switched on, energy is transferred from the input source to the inductor and the output. When the switch is turned off, the inductor current ramps downward and the energy is transferred to the output capacitor and the load. The output-to-input voltage ratio is ideally equal to the conduction duty cycle of the switch for continuous operation. Since most applications severely limit the amount of pulsating current that can be drawn from the converters input source, some form of low pass filter is generally inserted on the input side of the switch.

Case Temperature
The temperature of a converter measured at its base plate. Temperature ratings for converters are usually given for the case temperature (Tc). The case temperature for an operating converter is ordinarily higher than the ambient temperature.

Common
The common input or output terminal of a power supply. It carries the return current for the terminals. Also referred to as "return".

Common Mode Noise
The component of noise which is common to both the DC input and input return or output and output return with respect to a common reference. The common reference is generally the converters metal base.

Constant Voltage Power Supply
A power supply that regulates its output voltage within specified limits in spite of line, load, and temperature changes.

Cross Regulation
On multiple output power supplies, the change (usually measured in percentage) of the nominal output voltage on one output while the load is varied on another output over specified conditions.

Crowbar
An over voltage protection circuit which monitors the output voltage of a power supply and rapidly creates a low resistance path across the output when a predetermined voltage is exceeded.

Derating
A reduction in an operating specification to improve reliability.

Dielectric Breakdown Voltage
The minimum AC or DC voltage which, when applied across an isolation barrier of a power converter, can cause a direct short to the outputs or the case. Input to output and input/output to case are examples of isolation barriers. Exceeding a converters dielectric breakdown voltage can permanently degrade performance.

Differential Mode Noise
The component of noise measured from the DC output or input to the return.

GLOSSARY OF TERMS

Dual Balanced Outputs
An output voltage regulation scheme for dual opposite polarity output converters in which the absolute sum of the two voltages is held constant.

Dynamic Load Regulation (Output Impedance)
The ratio of change in transient output voltage to change in load current.

Efficiency
Efficiency is measured at full load and nominal line input. Efficiency(%) =(Output Power/Input Power) x100.

EMI (Electro magnetic Interference)
Conducted or radiated noise which is emitted from switching power supplies.

Epoxy Potting
An method of hybrid packaging which consists of coating the substrate with a conformal coating and then submerging it in a potting cup filled with epoxy. Epoxy-potted modules have excellent thermal capacity characteristics but are not as resistant to moisture or as tolerant of temperature cycles as other types of packaging.

ESR (Equivalent Series Resistance)
The amount of resistance, in series with an ideal capacitor, required to exactly model a real capacitor.

Fuse
The recommended fuse is specified for each series. External Fusing should be used for system protection. Proper fuse size will limit the input power and reduce the risk of fire should a catastrophic failure occur to either the users circuit or the power converter.

Input Current
The typical current that the converter will draw from the power source at nominal line voltage under full load and no load conditions.

Input Over Voltage
The maximum voltage allowed at the converters input terminals without damaging the converter. The specification is usually limited to 100 ms maximum duration and less than 0.05% duty cycle.

Input Range
The minimum to maximum input voltage for which the converter will meet its specifications.

Isolation
The electrical separation between input and output of a power supply by means of the power transformer. The isolation resistance (normally in meg ohms) and the isolation capacitance (normally in pico farads) are specified and are a function of materials and spacing employed throughout the power supply.

Isolation Capacitance
The measured capacitance from the input pins to the output pins.

Isolation Voltage
The maximum AC or DC voltage that may be continuously applied from input to output and/or chassis or a power supply.

Line Regulation
Is the change in output voltage when the input voltage is changed from minimum to maximum, expressed as a percentage of the output voltage.

Load Regulation
The change in output voltage when the output load is changed from minimum to maximum, expressed as a percentage of the output voltage.

Nominal Input
The nominal value listed is the voltage used for all other tests unless otherwise specified.

Operating Temperature Range (Case)
The temperature range of the environment in which the converter will operate to specified parameters with no derating. The temperature of the environment is defined as the still-air temperature in the immediate vicinity of a power supply, measured a minimum of 4 inches from the supply.

Output Trim
Output voltage trimming allows the user to change the output voltage of the module. The output trim can be either a fixed resistor or a potentiometer. Any value from zero ohm to infinity may be used to trim the output voltage when fixed resistors are used. This pin may be safely left floating if it is not used.

Over Temperature Protection
The case temperature above which the converter will shut down operation. Thermal shutdown halts the PWM operation placing the converter in a low current drain mode until the case temperature decreases.

GLOSSARY OF TERMS

Over Voltage Protection
A power supply protection feature that shuts down the supply, crowbars or clamps the output when its output voltage exceeds a preset level.

Remote On/Off
Enables power supply to be remotely turned on or off. Turn-on is typically performed by open circuit or TTL logic "1" and turn-off by switch closure or TTL logic "0".

Rated Current
This is the rated load range for the output. Normally there is a minimum load required for proper operation. Operation below minimum load will not harm APDs products in any way but load regulation may suffer. Operation above the maximum rated load is not recommended as it may degrade specifications or the converters life. All APDs products are designed to be reliable in operation at the full rated load provided that the case temperature does not exceed specifications.

Reflected Ripple
Due to the switching nature of a DC/DC converter, noise is "reflected-back" into the input source. This noise is measured as a peak-to-peak current over a 0 to 20 MHz bandwidth. The largest part of this current is at the fundamental switching frequency (or twice the switching frequency for push-pull designs).

Ripple and Noise
The magnitude of AC voltage on the output of a DC/DC converter expressed in millivolts peak-to-peak or RMS at a specified band width. DC/DC converter output noise consists of two components. A frequency component at the switching frequency of the converter and a high frequency component due to the fast edges of the switching transitions. Ripple and noise should always be measured directly at the output terminals with a scope probe having an extremely short grounding lead. See Application Note: Test Configurations.

Short-Circuit Input Power
The maximum input power that a converter will source with its output shorted.

Short Circuit Protection
All of APDs converters are designed to withstand a direct short on the output pins and will recover to normal operation when the short condition is removed. Under some conditions, the long term life of the converter will be degraded unless the short is removed within a small period of time.

Storage Temperature
The range of ambient temperature in which a power supply may be safely stored, while not operating, with no degradation in its subsequent operation.

Switching Frequency
The fundamental frequency at which the DC/DC converter operates. In push-pull designs, the output ripple is actually at twice the switching frequency due to the push-pull nature of the power stage.

Transient Recovery Time
The time required for the output voltage of a power supply to settle within specified output accuracy limits following a step change in output load current or a step change in input voltage.

Transient Response Deviation
The output voltage overshoot due to the application of a step change in load. The output voltage momentarily deviates from its final regulated value.

Temperature Coefficient
The average percentage change in output voltage per degree centigrade change in ambient temperature over a specified temperature range.

Under Voltage Protection
Some power converters have an under voltage shutdown circuit that shuts the converter off in the event of a low line voltage condition. The converter is usually placed in a low power condition to prevent excessive input current from the source.

Unit Weight
The weight of the converter in grams. 1 ounce = 28.3 grams.

Voltage Balance
The voltage balance is specified on dual converters. It is the difference in absolute terms between the positive output and the negative output expressed as a percentage. For example, if the positive output is at 15.00 Volts and the negative output is at -15.15 volts the balance would be 1.0%.

Voltage Accuracy
The allowed variation in output voltage for a nominal line input and full load condition. This might also be considered the "voltage range" specification of the output voltage.

MEASUREMENT TECHNIQUES

Line Regulation

Measure the output voltage at rated load and at 25 Deg C ambient. Record output voltage with input voltage at low line, nominal and high line. Line regulation is defined as the maximum of the two deviations of output from the value at nominal input. This value is typically specified in percent. Measurements should be taken as quickly as possible so that internal temperature changes do not affect the accuracy.

Load Regulation

At nominal line and 25 Deg C ambient, measure the output voltage at rated load and at minimum load. Load regulation is the difference between the two outputs as a percent of output voltage at rated load. Measurements should be taken as quickly as possible so that internal temperature changes do not affect accuracy.

Temperature Coefficient

Measure the output voltage at nominal ambient temperature (usually 25 Deg C) , nominal input voltage and rated load, and then vary the ambient temperature to each limit. Note the voltage change at each extreme and divide it by the corresponding temperature change. The temperature coefficient is the greater of the numbers.

Output Ripple and Noise

Because of the high frequency content in the output noise waveform, and the proximity of radiated emissions from the converter, it is impossible to make valid measurements without special considerations.

Using an oscilloscope with a 20 MHZ bandwidth or one with a 20 MHz filter engaged, use a 1 to 1 oscilloscope probe, with at least 20 MHZ probe bandwidth. Remove the probe tip and grounding lead touch the probe tip to the pin of the output being measured and the grounding ring near the tip to the common pin. There is still a small antenna loop created by the probe tip and output terminals. Residual pick up can be reduced by connecting a 0.1μF ceramic capacitor across the output terminals if necessary.

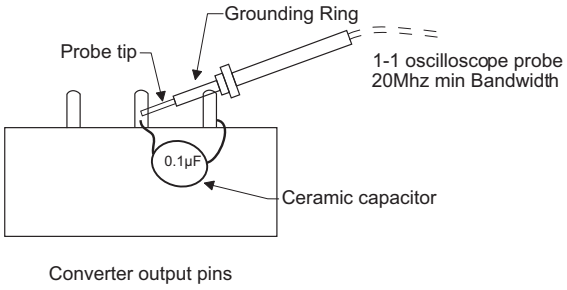

Note: A probe with a conventional ground clip connection will not work for this measurement.

MEASUREMENT TECHNIQUES

Another method which can be used to obtain accurate measurements is to use a 50 Ohm terminated coaxial cable between the converter and the oscilloscope.

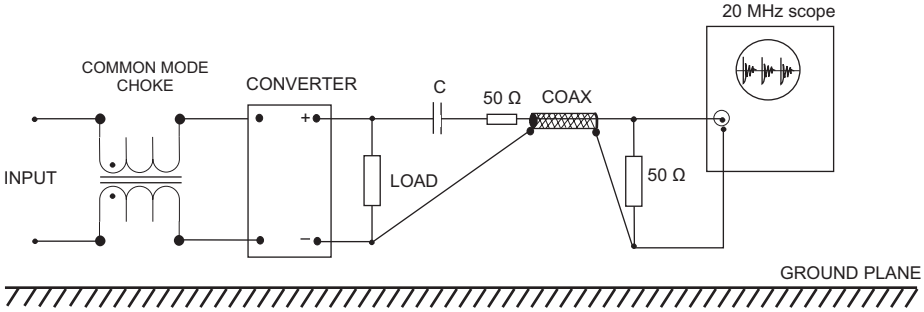

Note use of common mode choke to attenuate common mode noise.

With a high quality conductive ground plane (a sheet of copper or aluminum is acceptable) in place between the converter and the oscilloscope, the shielded low impedance interconnecting wires will pick up very little extraneous noise. To minimize the effects of common mode noise a common mode choke is connected to the converter input. With this method of measurement the actual noise is double the peak to peak value displayed on the oscilloscope, since the terminated coax divides the signal by 2. To obtain accurate measurements the load must have a very low reactance at the switching frequency, preferably below 2%. The coupling capacitor C can be a low ESR electrolytic type, not less than 10µF.

Common Mode Noise Current

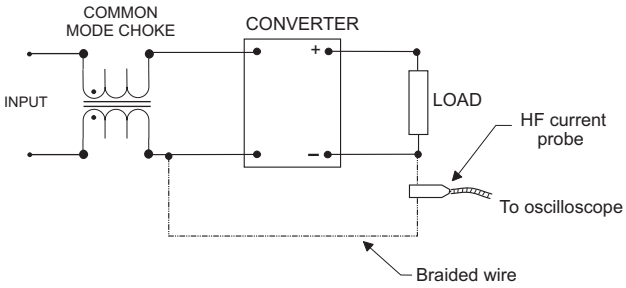

Attach a common mode choke between the input power source and the converter under test. Attach a short conductor between the input common pin and the output common pin. A piece of braid or solderwick will work well. Clamp a current probe onto this conductor, and measure the peak to peak current. Use a filter to establish the 20 MHZ bandwidth.

Reflected Ripple Current

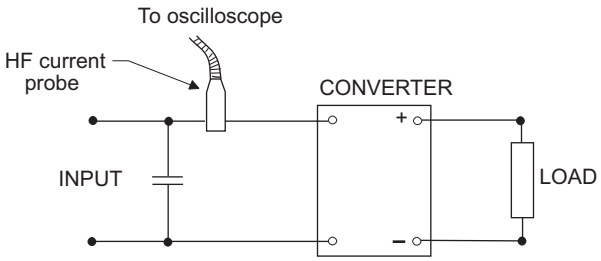

This is an important parameter for DC/DC converters because they are sometimes supplied from relatively high impedance sources, or they are at the end of long supply wires. It occurs in all switched mode converters because during switching action very short duration high current pulses are demanded.

A typical measurement technique is to use a wideband current probe and oscilloscope.

COMMON MODE NOISE CONSIDERATIONS

Common Mode Noise

DC/DC converters operate by chopping the DC input voltage into an AC signal then transferring that signal through a transformer. The AC is then rectified back into DC for the output. The output voltage can be adjusted either higher or lower than the input voltage depending on the turns ratio of the transformer.

The transformer is made from concentric windings on top of each other for the primary and secondary windings, due to their close proximity to one another, capacitance is created from input to output on the transformer.

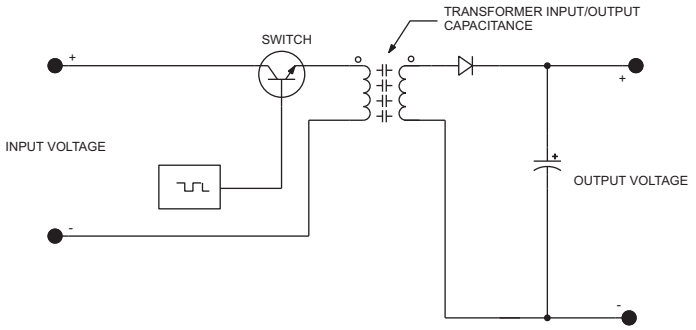

Common Mode Current

Each time the input chopper switches, a large dV/dT is applied by the input stage across the transformer. This in turn, causes a current to want to flow from input to output through the transformer capacitance. This current flows twice each switching cycle and it must find a path back to the input "source." The current is commonly called the "Common Mode Current" since it can flow through any or all of the I/O pins individually or at the same time with no external current path from input to output, (i.e. the converter is driving isolated resistors that have very little capacitance back to the input) the common mode current is contained in the converter and flows through the stray capacitance from the input to the output, causing no further problems.

External Current Path

When an external current path is introduced to the converter, such as a wire from the input to output grounds, the current will tend to want to flow through this lower impedance connection. This can be OK as long as the inductance of this connection is very low. The current is a dI/dT caused by a dV/dT. If there is appreciable inductance in the external path, the dI/dT will cause a voltage (V = L x dV/dT) to be developed between the grounds. This will show up as voltage noise at either the input or output terminals. So, this wire connection should have as low a value of inductance as possible. This usually dictates short length and a small total "loop area".

Reducing Common Mode Noise

There are several strategies to reduce the effect of the common mode currents when the input and output grounds must be tied together for system reasons.

Technique #1:
Tie the ground connection directly between the input and output pins with the shortest possible wiring length, that will add minimal inductance.

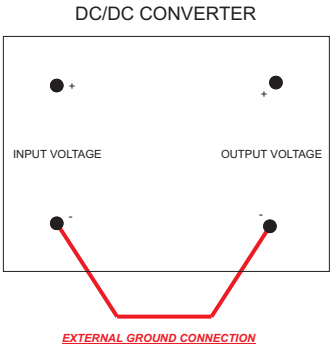

COMMON MODE NOISE CONSIDERATIONS

Technique #2
Using a DC connection to block the AC component of the common mode noise. This can be done by using a Low Q inductor between the grounds. The inductor must have sufficient impedance at the switching frequency to be at least 5 to 10 times larger in impedance than the measured stray circuit capacitance's impedance. To keep the Q low use a 100 ohm to 10K ohm shunt resistor across the inductor. The shunt resistor is necessary to prevent resonant peaking of the impedance.

This method gives a solid DC ground but blocks the common mode current from flowing in the connection.

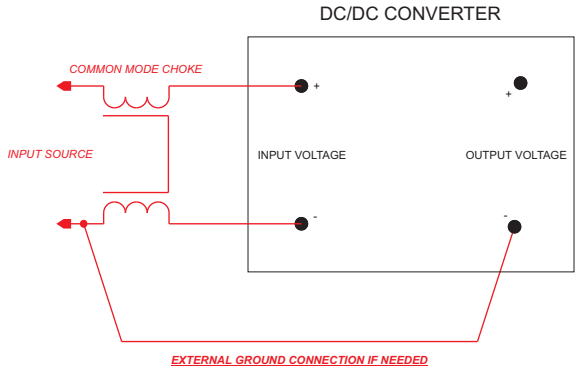

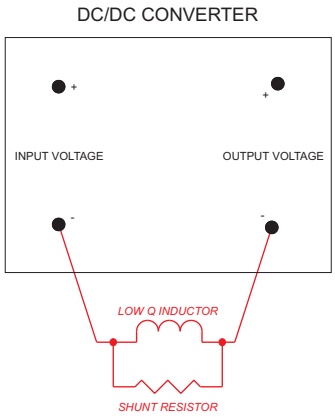

Technique #3
Block the common mode current from flowing out of the converter by using a common mode choke on the input side. Often confused with a BALUN (meaning BALanced to UNbalanced transmission line impedance transformer) they are typically a small high permeability, ferrite or MPP torrid that is wound with two windings. These devices present a very low impedance to any normal mode signal flowing through the lines (DC current, for example). However, they present a very large impedance to any common mode signals that try to flow through both windings in phase, such as the DC/DC converter's common mode current.

Basic Common Mode Choke Design

The basic parameters needed for common mode choke design are input current, load, and frequency. Input current determines the size of the conductor needed for the windings. Four hundred amps per square centimeter is a common design value for calculating wire size. Single stranded wire is almost always used because it is the least expensive and it helps contribute to the noise attenuation through high frequency skin effect losses.

The value of inductance required of the choke is the load in Ohms divided by the radian frequency at and above which the signal is to be attenuated. For example, attenuation at and above 1 kHz into a 50 Ohm load would require a 7.96 mH (50/(2p x 1000)) inductor.

PRINCIPLES OF POWER CONVERSION

Square-Wave Converter

This is the classic DC/DC converter circuit. In its various versions it may be know as the Jensen, Royer or Jensen-Royer circuit. It is also know as a multivibrator or oscillator because one transistor conducts current while the opposite one does not; then the reverse occurs. What characterizes a square-wave converter is low input/output noise, narrow input voltage operating range, and unregulated output voltage (The output voltage linearly follows the input voltage). The output voltage can be used directly, or it can be post regulated, normally via a linear regulator. A transformer is an inherent part of this design and therefore the converter can provide excellent isolation between the input and output.

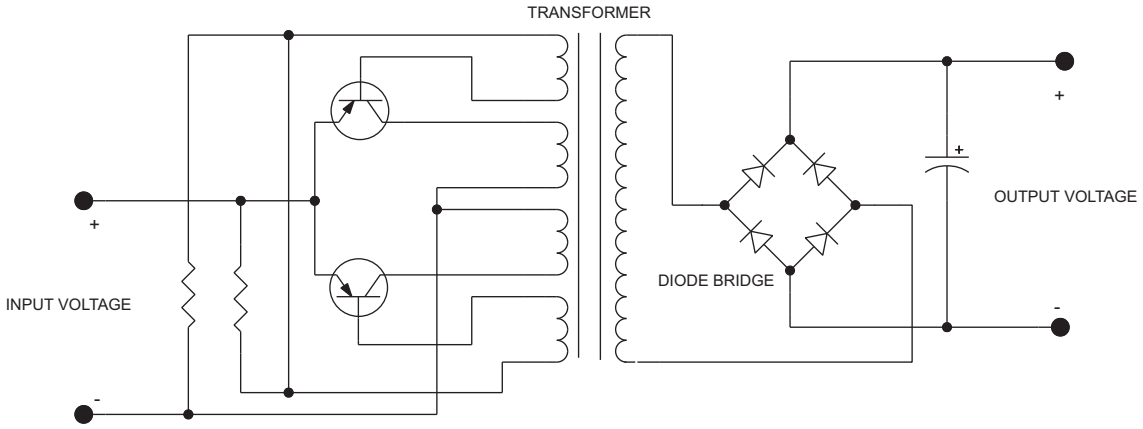

Linear Regulator

The Technique used in this converter enables it to regulate a varying input voltage to a constant output by placing a controllable resistive element between the input and output. With the use of a divider network the output voltage can be compared to a fixed reference voltage by means of an error amplifier controlling the resistance element to keep the output voltage constant regardless of changes in output load current or input voltage. The input voltage must always be higher than the output voltage. Linear regulators have low input and output noise and a very fast transient response as well as excellent regulation. However, since the entire voltage difference between the input and output voltage must be dropped by resistive element the efficiency is often very poor.

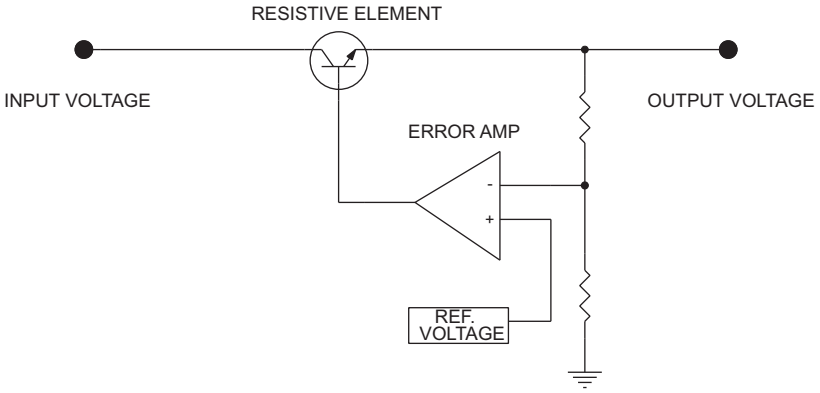

PRINCIPLES OF POWER CONVERSION

Buck Regulator

The topology used in this design regulates an output voltage down from a higher voltage of the same polarity. When the switch is on, energy is stored in the inductor as current flows to the output then when the switch is turn off, the stored energy in the inductor is allowed to flow backwards through the swing diode to the output, This technique maintains nearly constant efficiency over a wide input voltage range. Similar to the Linear regulator, the error amplifier adjusts the Pulse Width Modulator (PWM) to control both the on and off time of the switch. The output noise is low, but the input reflected ripple can be high and may require extra filtering. The line and load regulation is excellent, however, the transient response is slower than that of a linear regulator. The output generally does not have short circuit protection.

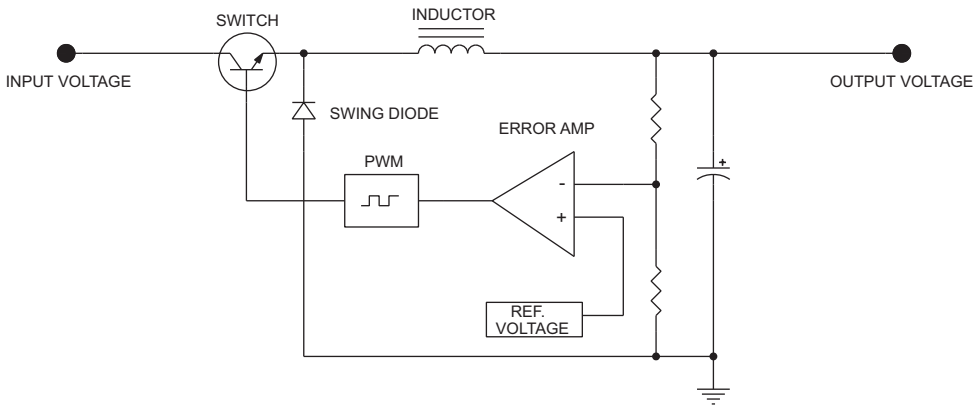

Forward Converter

This design adds a transformer to the Buck regulator topology to achieve isolation between the input and output. This arrangement allows the output voltage to be either higher or lower than the input voltage depending on the turns ratio of the transformer. Feedback from the output controls the pulse width of a fixed frequency switch. The ripple and overload characteristics are similar to buck regulator. Auxiliary quasi-regulated outputs can easily be produced by adding additional winding to the output inductor.

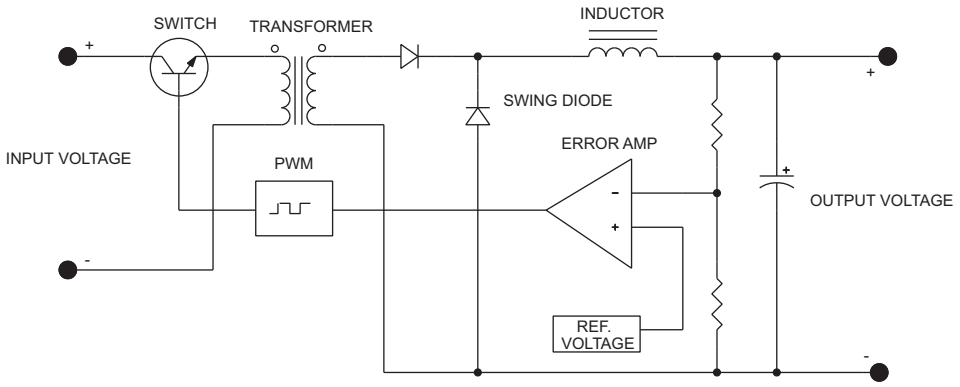

PRINCIPLES OF POWER CONVERSION

Flyback Converter
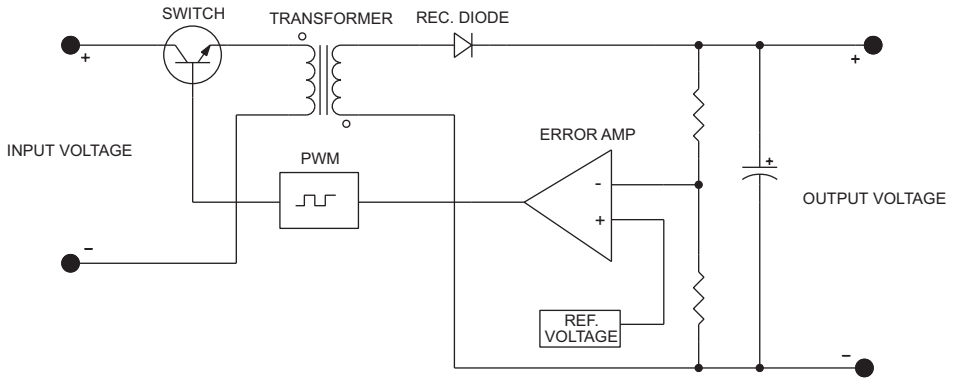
In this design an Isolation transformer is used as an energy storage element, placing energy into the transformer from the input and then releasing it though a rectifier diode to the output. Feedback is created in much the same way as the forward converter although, requiring fewer components overall. The output voltage can be higher or lower than the input depending on the turns ratio of the transformer but can generate higher ripple currents on both input and output. Auxiliary quasi-regulated outputs can easily be produced by adding additional winding to the transformer.